1962
ASME
BOILER
AND
PRESSURE
VESSEL
CODE

I	Power Boilers
II	Material Specifications
IV	Low-Pressure Heating Boilers
VII	Suggested Rules for Care of Power Boilers
VIII	Unfired Pressure Vessels
IX	Welding Qualifications

ASME BOILER AND PRESSURE VESSEL CODE

MATERIAL SPECIFICATIONS

section II

1962

ASME BOILER AND PRESSURE VESSEL CODE

MATERIAL SPECIFICATIONS

section II

1962

MATERIAL SPECIFICATIONS

1962 EDITION

REPORT OF SUBCOMMITTEE OF BOILER AND PRESSURE
VESSEL COMMITTEE ON MATERIALS

THE AMERICAN SOCIETY OF MECHANICAL ENGINEERS
UNITED ENGINEERING CENTER
345 EAST FORTY-SEVENTH STREET, NEW YORK 17, N. Y.

1962 ASME Boiler and Pressure Vessel Code

Section	Title
I	POWER BOILERS
II	MATERIAL SPECIFICATIONS
III	BOILERS OF LOCOMOTIVES—No longer printed—its provisions are now included in Section I
IV	LOW-PRESSURE HEATING BOILERS
V	MINIATURE BOILERS—No longer printed—its provisions are now included in Section I
VII	SUGGESTED RULES FOR CARE OF POWER BOILERS
VIII	UNFIRED PRESSURE VESSELS
IX	WELDING QUALIFICATIONS

Case Interpretations

The Boiler and Pressure Vessel Committee meets regularly to consider requests for interpretations of the Code and to consider rulings for conditions encountered requiring special provisions. Those which have been adopted are published in a case interpretation booklet. In addition that booklet contains a separate group of SPECIAL RULINGS COVERING NUCLEAR INSTALLATIONS.

Interpretation and Addenda Service

Pink Sheet Addenda, which include additions to and revisions of all existing sections of the Code, and subsequent case interpretations in white loose leaf sheets may be obtained from the ASME Publication Sales Department at an annual subscription price.

Copyright, 1962, by
THE AMERICAN SOCIETY OF MECHANICAL ENGINEERS

Printed in the United States of America
Adopted by the Council of The American Society of Mechanical Engineers, 1914.
Revised 1918, 1924, 1927, 1930, 1931, 1933, 1935, 1937, 1940, 1943, 1946, 1949, 1952, 1956, 1959, 1962

Approved by Council, The American Society of Mechanical Engineers, January 3, 1962, and previously

Foreword

The American Society of Mechanical Engineers set up a committee in 1911 for the purpose of formulating standard rules for the construction of steam boilers and other pressure vessels. This committee is now called the Boiler and Pressure Vessel Committee.

The Committee's function is to establish rules of safety governing the design, the fabrication, and the inspection during construction of boilers and unfired pressure vessels, and to interpret these rules when questions arise regarding their intent. In formulating the rules, the Committee considers the needs of users, manufacturers, and inspectors of pressure vessels. The objective of the rules is to afford reasonably certain protection of life and property and to provide a margin for deterioration in service so as to give a reasonably long safe period of usefulness. Advancements in design and material, and the evidence of experience have been recognized.

The Boiler and Pressure Vessel Committee deals with the care and inspection of boilers and pressure vessels in service only to the extent of providing suggested rules of good practice as an aid to owners and their inspectors.

The rules established by the Committee are not to be interpreted as approving, recommending, or endorsing any proprietary or specific design or as limiting in any way the manufacturer's freedom to choose any method of design or any form of construction that conforms to the Code rules.

The Boiler and Pressure Vessel Committee meets regularly to consider requests for interpretations and revisions of the rules. Inquiries must be in writing and must give full particulars in order to receive consideration. Requests for interpretations which are of a routine nature may be executed by the Secretary of the Boiler and Pressure Vessel Committee without reference to a subcommittee. All other requests are first referred to the proper subcommittee for consideration and for recommendation of action by the Main Committee. The action of the Main Committee becomes effective only after confirmation by letter ballot of the Committee and approval by the Council of the Society.

Interpretations of general interest are published in *Mechanical Engineering* as Code Cases, and inquirers are advised of the action taken. Code revisions approved by the Committee are published in *Mechanical Engineering* as proposed addenda to the Code to invite comments from all interested persons. After final approval by the Committee and adoption by the ASME Council, they are printed in the addenda supplements to the Code.

Code Cases (interpretations) may be used in the construction of vessels to be stamped with the ASME Code symbol beginning with the date of their approval by the ASME Council.

After Code revisions are approved by council they may be used beginning with the date of issuance shown on the pink sheet addenda. Revisions become mandatory as minimum requirements six months after such date of issuance, except for boilers or pressure vessels contracted for prior to the end of the six-month period.

Manufacturers and users of pressure vessels are cautioned against making use of revisions and Cases that are less restrictive than former requirements without having assurance that they have been accepted by the proper authorities in the jurisdiction where the vessel is to be installed.

Each state and municipality in the United States and each province in the Dominion of Canada that adopts or accepts one or more Sections of the Boiler and Pressure Vessel Code is invited to appoint a representative to act on the Conference Committee to the Boiler and Pressure Vessel Committee. Since the members of the Conference Committee are in active contact with the administration and enforcement of the rules, the requirements for inspection in this Code correspond with those in effect in their respective jurisdictions. The required qualifications for an authorized inspector under these rules may be obtained from the administrative authority of any state, municipality, or province which has adopted these rules.

The Boiler and Pressure Vessel Committee in the formulation of its rules and in the establishment of maximum design and operating pressures considers materials, construction, method of fabrication, inspection, and safety devices. Permission may be granted to regulatory bodies and organizations publishing safety standards to use a complete Section of the Code by reference. If

usage of a Section, such as Section I, involves exceptions, omissions, or changes in provisions, the intent of the Code might not be attained.

Where a state or other regulatory body, in the printing of any Section of the ASME Boiler and Pressure Vessel Code, makes additions or omissions, it is recommended that such changes be clearly indicated.

The National Board of Boiler and Pressure Vessel Inspectors is composed of chief inspectors of states and municipalities in the United States and of provinces in the Dominion of Canada that have adopted the Boiler and Pressure Vessel Code. This Board, since its organization in 1919, has functioned to uniformly administer and enforce the rules of the Boiler and Pressure Vessel Code. The cooperation of that organization with the Boiler and Pressure Vessel Committee has been extremely helpful. Its function is clearly recognized and, as a result, inquiries received which bear on the administration or application of the rules are referred directly to the National Board. Such handling of this type of inquiry not only simplifies the work of the Boiler and Pressure Vessel Committee, but action on the problem for the inquirer is thereby expedited. Where an inquiry is not clearly an interpretation of the rules, nor a problem of application or administration, it may be considered both by the Boiler and Pressure Vessel Committee and the National Board.

It should be pointed out that the state or municipality where the Boiler and Pressure Vessel Code has been made effective has definite jurisdiction over any particular installation. Inquiries dealing with problems of local character should be directed to the proper authority of such state or municipality. Such authority may, if there is any question or doubt as to the proper interpretation, refer the question to the Boiler and Pressure Vessel Committee.

The specifications for materials given in Section II of the Code are identical with or similar to those of the American Society for Testing Materials as indicated, except in those cases where that organization has no corresponding specification.

Statement of Policy on Use of Code Symbols in Advertising

The American Society of Mechanical Engineers established a series of symbols, for the marking of boilers, pressure vessels, and certain appurtenances which have been constructed and inspected in compliance with the ASME Boiler and Pressure Vessel Code. It is the aim of the Society to maintain the standing of the Code Symbols for the benefit of the users, the enforcement jurisdictions, and the holders of the symbols who comply with all requirements. Based on that objective the following policy has been established on the usage in advertising of facsimiles of the symbols and reference to Code construction.

The American Society of Mechanical Engineers does not "approve," "certify," "endorse" or "rate" any product or construction and there shall be no statements or inferences which might so indicate. A manufacturer holding a Code Symbol and a Certificate of Authorization may state in advertising literature that its products "are built in accordance with the requirements of the ASME Boiler and Pressure Vessel Code," or "meet the requirements of the ASME Boiler and Pressure Vessel Code."

The ASME Symbol shall be used only for stamping and name plates as specifically provided in the Code. However, facsimiles may be used for the purpose of fostering the use of such construction. Such usage may be by an association or a society, or by a holder of a Code Symbol who may also use the facsimile in advertising to show that clearly specified products will carry the symbol. General usage is permitted only when *all* of a manufacturer's products are constructed under the Rules.

Members of Boiler and Pressure Vessel Committees

Main Committee

Chairman To be announced
F. S. G. Williams, *Vice-Chairman*
J. D. Andrew, Jr.
E. O. Bergman
J. S. Clarke
F. W. Davis
A. R. Gatewood
J. M. Guy
J. H. Harlow
W. G. Henderson
G. O. Hoglund
E. M. Kloeblen
B. F. Langer
J. L. Menson
R. F. Miller
C. O. Myers
E. O. Peterson
N. J. Rees
J. W. Turner
D. B. Wesstrom
C. W. Wheatley
E. J. Wiseman
L. P. Zick
J. D. Wilding, *Secretary*
J. W. Barr, *Assistant Secretary*
S. W. Reynolds, *Assistant Secretary*

Honorary Members

P. R. Cassidy
A. J. Ely
E. R. Fish
W. P. Gerhart
E. C. Korten
H. B. Oatley
James Partington
D. L. Royer
Walter Samans
A. C. Weigel
H. L. R. Whitney

Conference Committee

J. H. Acton, Maryland
D. R. Bartosch, Oregon
R. Beckwith, Michigan
W. A. Berriman, Quebec, Canada
M. L. Blair, Arkansas
B. M. Book, Pennsylvania
J. C. Briscoe, Oklahoma
E. E. Bucklin, North Dakota
T. C. Cannon, Tulsa, Oklahoma
L. R. Cardwell, Newfoundland, Canada
F. J. Castro, Puerto Rico
W. E. Clarke, New York City
F. W. Cooper, Minnesota
R. P. Cravens, Los Angeles, Calif.
M. Del Begio, Manitoba, Canada
D. Denham, British Columbia, Canada
Thomas Dickson, Massachusetts
J. R. Donlan, Connecticut
F. J. Drooosch, Detroit, Michigan
C. Faust, Iowa
D. R. Gallup, Illinois
Lloyd Guffrey, Nevada
S. F. Harrison, North Carolina
L. V. Hutchinson, Ontario, Canada
H. R. Kannell, West Virginia
F. R. Kettler, Memphis, Tennessee
G. M. Kuetemeyer, Milwaukee, Wisconsin
H. K. Kugel, Dist. of Columbia
R. L. Langille, Maine
R. M. Loving, St. Louis, Mo.
F. W. Marcaccio, Rhode Island
H. S. Mauk, Delaware
D. C. McClelland, Tampa, Florida
T. H. Milton, Indiana
A. J. Munro, Alberta, Canada
H. L. Olinger, Spokane, Washington
R. Ostrum, Wisconsin
H. G. Parker, Austin, Texas
L. C. Peal, Tennessee
C. D. Pritchard, Mississippi
A. C. Rasmussen, Omaha, Nebraska
E. R. Shaw, Nebraska
C. E. Shriver, Kansas
J. L. Sisk, New Brunswick, Canada
G. V. Smith, Nova Scotia, Canada
A. I. Snyder, California
LeRoy Stannard, New York
J. L. Sullivan, New Jersey
Jos. Taylor, Saskatchewan, Canada
L. L. Taylor, Utah
Geoffrey Thompson, Canal Zone
S. T. Viggers, Washington
L. J. Vivien, New Orleans, La.
E. W. Wagner, Ohio
H. W. Watts, Louisiana

Executive Committee

F. S. G. Williams, *Chairman*
E. O. Bergman
J. H. Harlow
J. L. Menson
E. O. Peterson
C. W. Wheatley

Subcommittee on Power Boilers

J. H. Harlow, *Chairman*
J. D. Andrew, Jr.
A. M. Bain
J. U. Baley
J. W. Cartinhour
F. E. Foster
J. M. Guy
T. R. Hardin
W. L. Harding
E. H. Man
R. W. Olive
A. I. Snyder
E. J. Wiseman

Subgroup on Fire Tube Boilers

J. M. Guy, *Chairman*
D. Denham
J. F. Johnston, Jr.
C. L. Keene
C. O. Myers
Elmer Risseeuw
J. W. Strassberger
G. Welter

Subcommittee on Care of Steam Boilers in Service

F. L. Bradley, *Chairman*
R. A. Baker
F. S. Bennett
W. H. Byrne
H. A. Decker
F. G. Feeley, Jr.
T. R. Hardin
T. E. Purcell
C. E. Rodenburg
A. J. Ruch
L. B. Schuler
W. T. Sherman
A. R. Smith
J. W. Tracht
R. M. Van Duzer, Jr.
M. H. Winchester
Ernest Wing

Subgroup—Chemical

E. P. Patridge, *Chairman*
D. C. Carmichael
Director, U. S. Naval Eng. Experiment Station
T. J. Finnegan
R. A. Lorenzini
E. A. Pirsh
R. C. Stratton
S. F. Whirl

Subcommittee on Ferrous Materials and High Temperature Alloys

R. F. Miller, *Chairman*
A. R. Gatewood, *Vice-Chairman*
J. S. Worth, *Secretary*
P. M. Brister
E. C. Chapman
F. E. Foster
J. W. Freeman
W. G. Henderson
W. B. Hoyt
C. B. Jenni
E. M. Kloeblen
J. R. LeCron

Subgroup—Castings

C. B. Jenni, *Chairman*
J. C. Beres
L. H. Carr
W. B. Hoyt
J. J. Kanter
J. D. Lewis
J. F. Sebald

Subgroup on Forgings and Bolting

J. S. Worth, *Chairman*
R. F. Gill
G. T. Jones
E. M. Kloeblen
John Mochel
A. O. Schaeffer
F. S. G. Williams

Subgroup on Metals Engineering

P. M. Brister, *Chairman*
F. K. Bloom
G. S. Chadwick, Jr.
E. C. Chapman
C. L. Clark
R. C. Fitzgerald
J. W. Freeman
R. F. Gill
W. B. Hoyt
J. J. Kanter
T. E. Kihlgren
W. T. Lankford
I. A. Rohrig
R. W. Schneider
W. E. Trumpler
F. Upson
J. S. Worth

Subgroup on Notch Sensitivity

E. M. Kloeblen, *Chairman*
J. S. Clarke
James Earthman
J. R. LeCron
I. A. Rohrig
R. E. Webb
F. S. G. Williams

Subgroup on Plates

J. R. LeCron, *Chairman*
J. G. Althouse
H. R. Boatman
J. E. Carney
R. C. Griffin
R. D. Hindson
M. S. Northrup
R. E. Webb
C. W. Wheatley

Subgroup on Tubular Products

F. E. Foster, *Chairman*
J. S. Adelson
C. L. Clark
R. W. Emerson
J. L. Menson
J. J. B. Rutherford
H. Soldan
A. B. Wilder
E. C. Yaw

Subcommittee on Nonferrous Materials

F. W. Davis, *Chairman*
E. O. Bergman
C. L. Bulow
J. W. Caum
R. P. Culbertson
F. W. DeMoney
G. B. Farkas
A. I. Heim
Marshall Holt
J. F. Klement
E. C. Miller
V. F. Nole
W. C. Norton
H. B. Oatley
R. D. Olleman
J. C. Robinson
Merrill Scheil
W. G. Snyder
W. V. Waterbury
V. P. Weaver

Subcommittee on Heating Boilers

J. W. Turner, *Chairman*
B. M. Book
M. Del Begio
L. N. Hunter
J. W. James
J. F. Johnston, Jr.
W. G. Lea
L. C. Peal
M. H. Westerberg
N. E. Westphal

Subcommittee on Unfired Pressure Vessels

L. P. Zick, *Chairman*
F. J. Allen
E. O. Bergman
B. M. Book
R. J. Cepluch
G. S. Chadwick, Jr.
J. S. Clarke
F. W. Davis
G. E. Fratcher
W. L. Killen
W. P. Kliment
E. M. Kloeblen
D. R. Loper
E. O. Mattocks
James Meikeljohn
M. S. Nehls
C. E. Rawlins
N. J. Rees
Andrew Russell
J. F. Sebald
D. B. Wesstrom

Subcommittee on Welding

C. W. Wheatley, *Chairman*
P. C. Arnold
E. O. Bergman
J. E. Carney
R. W. Clark
R. W. Emerson
C. Floyd
F. E. Foster
R. G. Goller
R. C. Griffin
T. J. Griffin
T. R. Hardin
G. O. Hoglund
A. N. Kugler
R. E. Lorentz, Jr.
J. P. Myers
N. G. Schreiner
K. M. Spicer
C. B. Voldrich
W. V. Waterbury

Subcommittee on Code Symbol Stamps

C. O. Myers, *Chairman*
J. L. Menson
N. J. Rees

Subcommittee on Openings and Bolted Connections

J. D. Andrew, Jr., *Chairman*
B. W. Bace
G. B. Boon
R. J. Cepluch
R. J. Del Buono
G. B. Farkas
R. L. Girouard
M. B. Higgins
W. P. Kliment
Sigmund Kopp
H. Liessenberg
J. Meiklejohn
J. E. Soehrens
E. O. Waters
D. B. Wesstrom
W. A. Woodburn

Subcommittee on Safety Valve Requirements

C. O. Myers, *Chairman*
Paul Bucher
J. L. Corcoran
J. J. Duggan
F. J. Heller
E. Klafstad
W. P. Kliment
E. N. McDonnell
J. L. Menson
R. E. Poethig

Subcommittee on Special Design

D. B. Wesstrom, *Chairman*
J. S. Clarke
A. J. Del Buono
G. B. Farkas
J. R. Farr
F. L. Plummer
J. E. Soehrens
E. O. Waters
W. A. Woodburn
L. P. Zick

Subcommittee on Strength of Vessels Under External Pressure

F. V. Hartman, *Chairman*
M. B. Higgins
Marshall Holt
E. E. Johnson
H. W. Marsh
R. G. Sturm
D. B. Wesstrom

(f)

ASME BOILER and PRESSURE VESSEL CODE

SECTION II

MATERIAL SPECIFICATIONS

FERROUS MATERIALS

SPECIFICATION FOR STEEL FOR BRIDGES AND BUILDINGS

SA-7

(IDENTICAL WITH ASTM SPECIFICATION A 7-61T EXCEPT THAT THE REFERENCES TO BESSEMER STEEL HAVE BEEN DELETED)

Scope

1. This specification covers carbon-steel shapes, plates, and bars of structural quality for use in the construction of bridges and buildings and for general structural purposes.

Appurtenant Materials

2. Unless otherwise provided in the order, the current edition of the ASTM specifications listed in Table I shall govern the delivery of the respective appurtenant materials when included with material purchased under the ASTM Designation A 7.

General Requirements for Delivery

3. Material furnished under this specification shall conform to the applicable requirements of the current edition of the Specification for General Requirements for Delivery of Rolled Steel Plates, Shapes, Sheet Piling, and Bars for Structural Use (ASTM Designation: A 6).

Bearing Plates and Anchor Bolts

4. (*a*) Unless otherwise specified, plates used as bearing plates for bridges shall be subjected to mechanical tests and shall conform to the tensile requirements of Section 7.

TABLE I.

Material	ASTM Designation[a]
Rivet Steel	A 141
Bolts and Nuts	A 307, A 325
Cast Iron	A 48, Class 25
Malleable Iron	A 47, Grade No. 35018
Cast Steel	A 27, Grade 65–35 full annealed, with minimum yield point of 33,000 psi
Forgings (Carbon Steel)	A 235, Class C1
Hot-Rolled Sheets	A 245, Grade C
Hot-Rolled Strip	A 303, Grade C

[a] These designations refer to the following specifications:
Specification for Structural Rivet Steel (ASTM Designation: A 141),
Specifications for Low Carbon Steel Externally and Internally Threaded Standard Fastener (ASTM Designation: A 307),
Specifications for Quenched and Tempered Steel Bolts and Studs with Suitable Nuts and Plain Hardened Washers (ASTM Designation: A 325),
Specifications for Gray Iron Castings (ASTM Designation: A 48),
Specifications for Malleable Iron Castings (ASTM Designation: A 47),
Specifications for Mild- to Medium-Strength Carbon-Steel Castings for General Application (ASTM Designation: A 27),
Specification for Carbon Steel Forgings for General Industrial Use (ASTM Designation: A 235),
Specifications for Flat-Rolled Carbon Steel Sheets of Structural Quality (ASTM Designation: A 245), and
Specifications for Hot-Rolled Carbon Steel Strip of Structural Quality (ASTM Designation: A 303).

(*b*) Unless otherwise specified, mechanical tests shall not be required for plates over 1½ in. in thickness used as bearing plates in buildings and for general structural purposes, subject to the requirement that they shall be open hearth, basic oxygen, or electric furnace steel containing 0.20 to 0.33 per cent carbon by ladle analysis, that the chemical composition shall conform to the requirements of Section 6, and that a sufficient discard shall be made from each ingot to secure sound plates.

(*c*) Unless otherwise specified, all plain and threaded bars used for anchorage purposes shall be subjected to mechanical tests and shall confom to the tensile requirements of Section 7; headed bolts used for anchorage purposes, and all nuts, shall conform to the requirements of Specification A 307.

Process

5. The steel, shall be made by one or more of the following processes: open hearth, basic oxygen, or electric furnace.

Chemical Composition

6. (*a*) When subjected to the ladle and check analyses, respectively, required by

TABLE II.—CHEMICAL REQUIREMENTS.

	Ladle Analysis	Check Analysis
Phosphorus, max, per cent:		
Open hearth, basic oxygen, or electric furnace:		
Acid	0.06	0.075
Basic	0.04	0.05
Sulfur, max, per cent (open hearth, basic oxygen, or electric furnace)	0.05	0.063
Copper, when copper steel is specified, min, per cent	0.20	0.18

TABLE III.—TENSILE REQUIREMENTS.

	Plates, Shapes, and Bars
Tensile strength, psi:	
For shapes of all thicknesses	60 000 to 75 000
For plates and bars up to 1½ in., incl in thickness	60 000 to 72 000
For plates and bars over 1½ in. in thickness	60 000 to 75 000
Yield point, min, psi	33 000
Elongation in 8 in., min, per cent	21[a]
Elongation in 2 in., min, per cent	24[b]

[a] See Section 7(c) and (d).
[b] See Section 7(e).

TABLE IV.—BEND TEST REQUIREMENTS.

Thickness of Material, in.	Ratio of Bend Diameter to Thickness of Specimen for Plates, Shapes, and Bars
¾ and under	½
Over ¾ to 1, incl	1
Over 1 to 1½, incl	1½
Over 1½ to 2, incl	2½
Over 2 in.	3

the provisions of Specification A 6, the steel shall conform to the requirements as to chemical composition prescribed in Table II, except as specified in Paragraph (*b*) of this section.

(*b*) Check analysis is not required for bar-size shapes, for flat bars ½ in. and under in thickness, or for any bars ordered as merchant quality.

(*c*) When tension tests are waived in accordance with Section 7 (*b*), chemistry consistent with the mechanical properties desired must be applied.

Tensile Properties

7. (*a*) The material as represented by the test specimens, except as specified in Section 4 and Paragraph (*b*) of this section, shall conform to the requirements as to tensile properties prescribed in Table III.

(*b*) Shapes less than 1 sq in. in cross-section, and bars, other than flats, less than ½ in. in thickness or diameter need not be subjected to tension tests by the manufacturer.

(*c*) For material under $\frac{5}{16}$ in. in thickness or diameter, a deduction from the percentage of elongation in 8 in. specified in Table III of 1.25 per cent shall be made for each decrease of $\frac{1}{32}$ in. of the specified thickness or diameter below $\frac{5}{16}$ in.

(*d*) For material over ¾ in. in thickness or diameter, a deduction from the percentage of elongation in 8 in. specified in Table III of 0.50 per cent shall be made for each increase of ⅛ in. of the specified thickness or diameter above ¾ in. This deduction shall not exceed 3 per cent.

(*e*) For material over 3½ in. in thickness or diameter, a deduction from the percentage of elongation in 2 in. specified in Table III of 0.50 per cent shall be made for each increase of ½ in. of the specified thickness or diameter above 3½ in. This deduction shall not exceed 3 per cent.

Bending Properties

8. The bend test specimen shall stand being bent cold through 180 deg without cracking on the outside of the bent portion to an inside diameter which shall have a relation to the thickness of the specimen as prescribed in Table IV.

Number of Tests

9. Two tension and two bend tests shall be made from each heat unless the finished material from a heat is less than 30 tons when one tension test and one bend test will be sufficient. If, however, material from one heat differs ⅜ in. or more in thickness, one tension test and one bend test shall be made from both the thickest and the thinnest material rolled, regardless of the weight represented.

SPECIFICATION FOR BOILER AND FIREBOX STEEL FOR LOCOMOTIVES

SA-30

(IDENTICAL WITH ASTM SPECIFICATION A 30-56)

Scope

1. This specification covers steel plates up to 2 in., inclusive, in thickness; of flange and firebox qualities; for boilers for locomotives.

General Conditions for Delivery

2. Material furnished under this specification shall conform to the applicable requirements of the current edition of the Tentative Specification for General Requirements for Delivery of Rolled Steel Plates of Flange and Firebox Qualities (ASTM Designation: A 20).

Process

3. The steel shall be made by either or both of the following processes: open-hearth or electric-furnace.

Chemical Composition

4. The steel shall conform to the requirements as to chemical composition prescribed in Table I.

Tensile Properties

5. (*a*) The material as represented by the tension test specimen shall conform to the requirements as to tensile properties prescribed in Table II.

(*b*) On the tension test specimen taken from the top of firebox plates, tensile strength only is to be determined, and it shall not exceed 70,000 psi. for grade A, nor 63,000 for grade B.

(*c*) For material under $\frac{5}{16}$ in. in thickness, a deduction from the percentage of elongation in 8 in. specified in Table II of 1.25 per cent shall be made for each decrease of $\frac{1}{32}$ in. of the specified thickness below $\frac{5}{16}$ in.

(*d*) For material over ¾ in. in thickness,

TABLE I.—CHEMICAL REQUIREMENTS.

	Flange	Firebox
Carbon, max., per cent:		
For plates ¾ in. or under in thickness	[a]	0.25
For plates over ¾ in. in thickness	[a]	0.30
Manganese, per cent:		
For plates ¾ in. or under in thickness	0.30 to 0.80	0.30 to 0.80
For plates over ¾ in. in thickness	0.30 to 0.80	0.30 to 0.80
Phosphorus, max., per cent:		
Acid	0.05	0.04
Basic	0.04	0.035
Sulfur, max., per cent	0.05	0.04
Incidental copper, max., per cent		0.25

[a] The required mechanical properties and current mill practice normally result in the carbon content not exceeding 0.35 per cent. However, determination of this element or certification that this limit is complied with shall be made only when specified in the inquiry and contract or order.

a deduction from the percentage of elongation in 8 in. specified in Table II of 0.5 per cent shall be made for each increase of ⅛ in. of the specified thickness above ¾ in. This deduction shall not exceed 3 per cent.

Bending Properties

6. The bend test specimen shall stand being bent cold through 180 deg without cracking on the outside of the bent portion to an inside diameter which shall have the following relation to the thickness of the specimen:

Thickness of Material, in.	Ratio of Bend Diameter to Thickness of Specimen
1 and under	1
Over 1	2

Test Specimens

7. (*a*) Test specimens shall be prepared for testing from material in its rolled condition.

(*b*) When so specified in the purchase order with the mill, test specimens representing the plates shall be stress-relieved by gradually and uniformly heating them to a temperature between 1100 and 1200 F. (or a temperature range otherwise agreed upon between the manufacturer and the fabricator), holding at temperature for at least 1 hr. per inch of thickness and cooling in still atmosphere to a temperature not exceeding 600 F.

Number of Tests

8. Two tension tests, one bend test and one homogeneity test shall be made from each firebox steel plate as rolled. One tension test and one bend test shall be made from each flange steel plate as rolled.

NOTE.—The term "plate as rolled" used here refers to the unit plate rolled from a slab or directly from an ingot in its relation to the location and number of specimens; not to its condition.

TABLE II.—TENSILE REQUIREMENTS.

	Flange	Firebox	
		Grade A	Grade B
Tensile strength, psi	55 000 to 65 000	55 000 to 65 000	48 000 to 58 000
Yield point, min., psi	30 000	30 000	26 000
Elongation in 8 in., min., per cent	24[a]	25[a]	27[a]
Elongation in 2 in., min., per cent	28	29	30

[a] See Section 5 (*c*) and (*d*).

SPECIFICATION FOR BOILER RIVET STEEL AND RIVETS

SA-31

(IDENTICAL WITH ASTM SPECIFICATION A 31-55)

Scope

1. These specifications cover two grades of rivet steel and rivets to be used in boilers and other pressure vessels.

Requirements for Rolled Bars

Process

2. The steel shall be made by either or both of the following processes: open-hearth or electric-furnace.

Chemical Composition

3. The steel shall conform to the requirements as to chemical composition prescribed in Table I.

Ladle Analysis

4. An analysis of each heat of steel shall be made by the manufacturer to determine for grades A and B the percentages of carbon, manganese, phosphorus, and sulfur. This analysis shall be made from a test ingot taken during the pouring of the heat. The chemical composition thus determined shall be reported to the purchaser or his representative and shall conform to the requirements for ladle analysis prescribed in Table I.

Check Analysis

5. An analysis may be made by the purchaser from finished bars representing each heat. The chemical composition thus determined shall conform to the requirements for check analysis prescribed in Table I.

Tensile Properties

6. (*a*) The material shall conform to the requirements as to tensile properties prescribed in Table II.

(*b*) The yield point shall be determined by the drop of the beam or halt in the gage of the testing machine.

Bending Properties

7. (*a*) The test specimen for grade A steel shall stand being bent cold through 180 deg flat on itself without cracking on the outside of the bent portion.

(*b*) The test specimen for grade B steel shall stand being bent cold through 180 deg without cracking on the outside of the bent portion to an inside diameter which shall have a relation to the diameter of the specimen as prescribed in Table III.

Test Specimens

8. (*a*) Test specimens shall be the full diameter of the bars as rolled.

(*b*) Tension and bend test specimens for rivet bars which have been cold-drawn shall be normalized before testing.

TABLE I.—CHEMICAL REQUIREMENTS.

	Grade A		Grade B	
	Ladle Analysis	Check Analysis	Ladle Analysis	Check Analysis
Carbon, max, per cent	0.28	0.31		
Manganese, per cent	0.30 to 0.60	0.27 to 0.63	0.30 to 0.80	0.27 to 0.83
Phosphorus, max, per cent	0.040	0.048	0.040	0.048
Sulfur, max, per cent	0.050	0.058	0.050	0.058

Number of Tests

9. (*a*) Two tension and two bend tests shall be made from each heat, unless the finished material from a heat is less than 30 tons, when one tension test and one bend test will be sufficient. Each test shall conform to the requirements specified in Sections 6 and 7.

(*b*) If any test specimen develops flaws, it may be discarded and another specimen substituted.

(*c*) If the percentage of elongation of any tension test specimen is less than that specified in Section 6(*a*) and any part of the fracture is outside the middle third of the gage length, as indicated by scribe scratches marked on the specimen before testing, a retest shall be allowed.

Permissible Variations in Diameter

10. The diameter of hot-finished rivet bars shall not vary from the size specified by more than the amounts prescribed in Table IV.

Finish

11. The material shall be free from injurious defects.

Marking

12. The rivet bars shall, when loaded for shipment, be properly separated in lifts and tagged with the name or brand

TABLE II.—TENSILE PROPERTIES.

	Grade A	Grade B
Tensile strength, psi	45 000 to 55 000	58 000 to 68 000
Yield point, min, psi	23 000	29 000
Elongation in 8 in., min, per cent	27	22

TABLE III.—BEND REQUIREMENTS.

Specimen Diameter, In.	Ratio of Bend Diameter to Diameter of Specimen
¾ and under	½
Over ¾	1

of the manufacturer and the heat number for identification. The heat number shall be legibly marked on each test specimen.

Inspection

13. The inspector representing the purchaser shall have free entry, at all times while work on the contract of the purchaser is being performed, to all parts

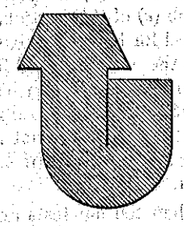

FIG. 1.—Bend Test of Rivet.

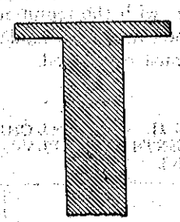

FIG. 2.—Flattening Test of Rivet.

of the manufacturer's works which concern the manufacture of the material ordered. The manufacturer shall afford the inspector, without charge, all reasonable facilities to satisfy him that the material is being furnished in accordance with these specifications. All tests (except check analysis for bars) and inspection shall be made at the place of manufacture prior to shipment, unless otherwise specified, and shall be so conducted as not to interfere unnecessarily with the operation of the works.

Requirements for Rivets

Bending Properties

14. (*a*) The rivet shank of grade A steel shall stand being bent cold through 180 deg flat on itself, as shown in Fig. 1, without cracking on the outside of the bent portion.

(*b*) The rivet shank of grade B steel shall stand being bent cold through 180 deg without cracking on the outside of the bent portion as prescribed in Table V.

TABLE IV.—PERMISSIBLE VARIATIONS IN THE SIZE OF HOT-ROLLED ROUNDS.

Specified Size, in.	Variations from Size, in.		Out-of-Round, In.
	Over	Under	
5/16 and under	0.005	0.005	0.008
Over 5/16 to 7/16, incl	0.006	0.006	0.009
Over 7/16 to 5/8, incl	0.007	0.007	0.010
Over 5/8 to 7/8, incl	0.008	0.008	0.012
Over 7/8 to 1, incl	0.009	0.009	0.013
Over 1 to 1 1/8, incl	0.010	0.010	0.015
Over 1 1/8 to 1 1/4, inc	0.011	0.011	0.016
Over 1 1/4 to 1 3/8, incl	0.012	0.012	0.018
Over 1 3/8 to 1 1/2, incl	0.014	0.014	0.021

NOTE.—Out-of-round is the difference between the maximum and minimum diameters of the bar, measured at the same cross-section.

Flattening Tests

15. The rivet head shall stand being flattened, while hot, to a diameter 2½ times the diameter of the shank, as shown in Fig. 2, without cracking at the edges.

Number of Tests

16. Three bend and three flattening tests shall be made from each size in each lot of rivets offered for inspection. Each test shall conform to the requirements specified in Sections 14 and 15.

Permissible Variations in Diameter

17. (*a*) *Finished Rivets.*—The diameter of finished rivets, measured cold, shall not vary from the size specified by more than the amounts prescribed in Table VI.

(*b*) Snap gage measurement shall be made at the point of minimum diameter, but it is not required that the rivet shall turn completely in the gage. Measurements of the maximum tolerance shall

TABLE V.—BEND REQUIREMENTS.

Diameter of Rivet Shank, In.	Ratio of Bend Diameter to Diameter of Rivet Shank
¾ In. and under	1
Over ¾ In.	1½

TABLE VI.—PERMISSIBLE VARIATIONS IN DIAMETER.

Diameter Specified, In.	Permissible Variations in Diameter, In.	
	Snap Gage Measurement	Ring Gage Measurement
½ in. and under	0.022 under	0.020 over
Over ½ to 1, incl	0.025 under	0.030 over
Over 1 to 1¼, incl	0.027 under	0.035 over
Over 1¼ to 1½, incl	0.030 under	0.040 over

be made with a ring gage, all rivets to slip full to the head in the gage of the required size for the various diameters.

(*c*) *Rivet Heads.*—The dimensions of the rivet heads shall not vary from the size specified by more than the amounts prescribed in Table VII.

Workmanship and Finish

18. The finished rivets shall be true to form and concentric and shall be free from injurious defects.

Rejection

19. (*a*) Unless otherwise specified, any rejection based on tests made in accordance with Section 5 shall be reported to the manufacturer within five working days from the receipt of samples by the purchaser.

(*b*) Material that shows injurious defects subsequent to its acceptance at the manufacturer's works will be rejected, and the manufacturer shall be notified.

Rehearing

20. Samples tested in accordance with Section 5 that represent rejected material shall be preserved for two weeks from the date of the test report. In case of dissatisfaction with the results of the tests, the manufacturer may make claim for a rehearing within that time.

TABLE VII.—PERMISSIBLE VARIATIONS IN RIVET HEADS.

Specified Size of Rivets, In.	Permissible Variations in Dimensions of Head, In.	
	Diameter	Height
½	+1/16 −1/32	+1/32
5/8	+1/16 −1/32	+1/32
¾	+1/16 −1/32	+1/32
7/8	+1/16 −1/32	+1/32
1 1/16	+1/16 −1/32	+1/32
¾	+3/64 −1/32	+1/32
7/8	+3/64 −1/32	+1/32
1	+3/64 −1/32	+1/32

SPECIFICATION FOR STRUCTURAL STEEL

SA-36

(IDENTICAL WITH ASTM SPECIFICATION A 36-61T)

Scope

1. This specification covers carbon steel shapes, plates, and bars of structural quality not over 4 in. in thickness for use in riveted, bolted, or welded construction of bridges and buildings, and for general structural purposes. When the steel is used for welded construction, it is important that suitable welding procedures be used.

Appurtenant Materials

2. Unless otherwise provided in the order, the current edition of the ASTM specifications listed in Table I shall govern the delivery of the respective appurtenant materials when included with material purchased under the ASTM Designation A 36.

General Requirements for Delivery

3. Material furnished under this specification shall conform to the applicable requirements of the current edition of the Specification for General Requirements for Delivery of Rolled Steel Plates, Shapes, Sheet Piling, and Bars for Structural Use (ASTM Designation: A 6).

Anchor Bolts

4. Unless otherwise specified, all plain and threaded bars used for anchorage purposes shall be subjected to mechanical tests and shall conform to the tensile requirements of Section 7; headed bolts used for anchorage purposes, and all nuts, shall conform to the requirements of Specification A 307.

Process

5. The steel shall be made by one or more of the following processes: open hearth, basic oxygen, or electric furnace.

Chemical Composition

6. (*a*) When subjected to the ladle and check analysis, respectively, required by the provisions of Specification A 6, the steel shall conform to the applicable requirements for chemical composition prescribed in Table II, except as specified in Paragraph (*c*) of this Section.

(*b*) Steel for plates and bars shall conform to the requirements for chemical composition prescribed in Table III, in addition to those prescribed in Table II.

(*c*) Check analysis is not required for bar-size shapes or flat bars ½ in. and under in thickness.

(*d*) When tension tests are waived in accordance with Section 7(*b*), chemistry consistent with the requirements in Table II, and with the mechanical properties desired must be applied.

TABLE I.—MATERIAL SPECIFICATIONS.

Material	ASTM Designation[a]
Rivet Steel	A 141
Bolts and Nuts	A 307, A 325
Cast Iron	A 48, (Appropriate Class
Malleable Iron	A 47, Grade No. 35018
Cast Steel	A 27, Grade 65–35
Forgings (Carbon Steel)	A 235, Class C1
Hot-Rolled Sheets	A 245, Grade C
Hot-Rolled Strip	A 303, Grade C

[a] These designations refer to the following Specifications of the American Society for Testing Materials:
A 141, Structural Rivet Steel,
A 307, Low Carbon Steel Externally and Internally Threaded Standard Fastener,
A 325, Quenched and Tempered Steel Bolts and Studs with Suitable Nuts and Plain Hardened Washers,
A 48, Gray Iron Castings,
A 47, Malleable Iron Castings,
A 27, Mild- to Medium-Strength Carbon-Steel Castings for General Application,
A 235, Carbon Steel Forgings for General Industrial Use,
A 245, Flat-Rolled Carbon Steel Sheets of Structural Quality,
A 303, Hot Rolled Carbon Steel Strip of Structural Quality.

TABLE II.—GENERAL CHEMICAL REQUIREMENTS FOR PLATES, SHAPES, AND BARS.

	Ladle Analysis	Check Analysis
Carbon, max, per cent	0.28	0.32
Phosphorus, max, per cent	0.04	0.05
Sulfur, max, per cent	0.05	0.063
Copper, when copper steel is specified, min, per cent	0.20	0.18

TABLE III.—ADDITIONAL CHEMICAL REQUIREMENTS FOR PLATES AND BARS.

Product	Plates				Bars	
Thickness	Over ¾ to 1½ in., incl		Over 1½ to 4 in., incl		Over ¾ to 4 in., incl	
Analysis	Ladle	Check	Ladle	Check	Ladle	Check
Manganese, per cent	0.80 to 1.10	0.76 to 1.14	0.85 to 1.20	0.80 to 1.25	0.60 to 0.90	0.57 to 0.93
Silicon, per cent	...	...	0.15 to 0.30	0.13 to 0.33	...	...

Tensile Properties

7. (*a*) The material as represented by the test specimen, except as specified in Paragraph (*b*) of this Section, shall conform to the requirements as to tensile properties prescribed in Table IV.

(*b*) Shapes less than 1 sq in. in cross-section and bars, other than flats, less than ½ in. in thickness or diameter need not be subjected to tension tests by the manufacturer.

(*c*) For material under $\frac{5}{16}$ in. in thickness or diameter, a deduction from the percentage of elongation in 8 in., specified in Table IV, of 1.25 per cent shall be made for each decrease of $\frac{1}{32}$ in. of the specified thickness or diameter below $\frac{5}{16}$ in.

(*d*) For material over ⅜ in. in thickness or diameter, a deduction from the percentage of elongation in 8 in., specified in Table IV, of 0.50 per cent shall be made for each increase of ⅛ in. of the specified thickness or diameter above ⅜ in. This deduction shall not exceed 3 per cent.

(*e*) For material over 3½ in. in thickness or diameter, a deduction from the percentage of elongation in 2 in., specified in Table IV, of 0.50 per cent shall be made for each increase of ½ in. of the specified thickness or diameter above 3½ in.

Bending Properties

8. The bend test specimens shall stand being bent cold through 180 deg without cracking on the outside of the bent portion, to an inside diameter which shall have a relation to the thickness of the specimen as prescribed in Table V.

TABLE IV.—TENSILE REQUIREMENTS.

	Plates, Shapes, and Bars
Tensile strength, psi	60 000 to 80 000
Yield point, min, psi	36 000
Elongation in 8 in., min, per cent	20[a]
Elongation in 2 in., min, per cent	23[b]

[a] See Section 7(*c*) and (*d*).
[b] See Section 7(*e*).

TABLE V.—BEND TEST REQUIREMENTS.

Thickness of Material, in.	Ratio of Bend Diameter to Thickness of Specimen for Plates, Shapes, and Bars
¾ and under	½
Over ¾ to 1, incl	1
Over 1 to 1½, incl	1½
Over 1½ to 2, incl	2½
Over 2 to 4, incl	3

Number of Tests

9. Two tension and two bend tests shall be made from each heat, unless the finished material from a heat is less than 30 tons, when one tension test and one bend test will be sufficient. If, however, material from one heat differs ⅜ in. or more in thickness, one tension test and one bend test shall be made from both the thickest and the thinnest material rolled, regardless of the weight represented.

SPECIFICATION FOR MALLEABLE IRON CASTINGS

SA-47

(IDENTICAL WITH ASTM SPECIFICATION A 47-61 EXCEPT THAT GRADE NO. 32510 AND THE APPENDIX HAVE BEEN DELETED)

Scope

1. These specifications cover malleable iron to be used in castings for railroad, marine, motor vehicle, agricultural implement, and general machinery purposes at both normal and elevated temperatures.

Process

2. The iron shall be made by one of the following processes: air-furnace, open-hearth, electric-furnace, or by one of the multiplex processes.

Primary Graphite

3. Castings shall be free from primary graphite.

Tensile Properties

4. (*a*) The tension test specimen specified in Section 5 shall conform to the following requirements as to tensile properties:

	Grade No. 35018
Tensile strength, min., psi	53 000
Yield point, min., psi	35 000
Elongation in 2 in., min., per cent	18

(*b*) The yield point may be determined by the drop of the beam or halt in the gage of the testing machine, or by the dividers method. If determined by the dividers method the stress producing an elongation under load of 0.01 in. over the gage length of 2 in. shall be taken as the yield point value.

(*c*) After reaching a stress equivalent to approximately 50 per cent of the anticipated yield point value, the speed of the moving head of the testing machine shall not exceed ½ in. per min. up to the yield point, and above the yield point, shall not exceed 2 in. per min.

Test Specimens

5. (*a*) Tension test specimens shall be of the form and dimensions shown in Fig. 1 or Fig. 2. Specimens whose mean diameter at the smallest section is less than $\frac{11}{32}$ in. will not be accepted for test.

(*b*) The manufacturer shall cast three or more test specimens from each heat in batch melting and at least every four hours of multiplex melting without chills, using heavy risers of sufficient height to secure sound bars. All specimens shall be suitably identified with the heat number in batch melting and with the pour period in multiplex melting.

(*c*) All test specimens shall be annealed in regular production annealing ovens as nearly as possible with castings which were made during the same operating heat or period.

Number of Tests

6. (*a*) The manufacturer shall test at least one annealed tension test specimen from each heat of batch melting or from each pour period of multiplex melting and shall record the results, except those of flawed bars, in permanent records. Such records covering the operating periods during which the purchaser's castings were produced should be available for examination by the purchaser's representative.

(*b*) The purchaser's representative may select and test tension specimens representing the approximate operating period during which the purchaser's castings were produced. The test results of flawed bars shall be discarded and duplicate bars shall be tested.

(*c*) Instead of conducting tests as provided in Paragraph (*b*), the representative of the purchaser may elect to examine the manufacturer's test records for the approximate period during which the purchaser's castings were produced. He may further request certified copies of any representative tests which he may select.

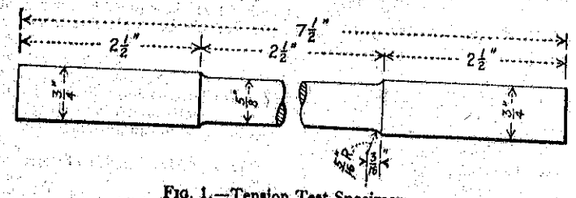

FIG. 1.—Tension Test Specimen.

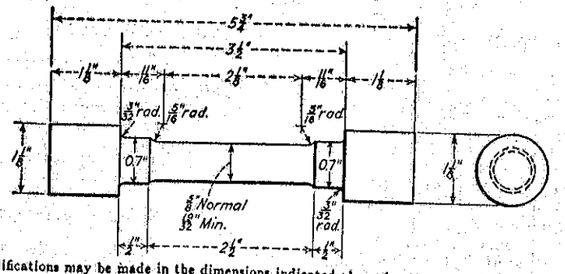

NOTE.—Modifications may be made in the dimensions indicated above for those details of the specimen outside of the gage length as required by testing procedure and equipment.

FIG. 2.—Alternative Unmachined Tension Test Specimen.

Special Tests

7. (*a*) If specified by the purchaser, or if their inclusion is standard practice, as in the case of some railroad castings, test lugs shall be cast on all castings of sufficient size to permit their incorporation. They shall be of a size proportional to the thickness of the casting. On castings which are 24 in. or over in length, a test lug shall be cast near each end. The test lugs shall be attached to the castings at such locations that they will not interfere with the assembling of the castings, and may be broken off by the inspector.

(*b*) At the option of the purchaser or his representative, a casting of each design ordered may be tested to destruction, or otherwise broken up, to determine the presence of any manufacturing condition which may be detrimental to the serviceability of the casting. The fracture through any heavy sections of this casting may be examined for the presence of primary graphite referred to in Section 3.

Reannealing

8. Any castings rejected for improper annealing may be reannealed once. The reannealed castings shall be inspected and if the remaining test lugs, or castings broken as specimens, show the castings to be properly annealed, they shall be accepted; if not, they shall be finally rejected.

Permissible Variations in Dimensions

9. A variation of ⅛ in. per ft. in any dimension will be permitted.

Workmanship and Finish

10. The castings shall be free from injurious defects. They shall conform substantially to the patterns or drawings furnished by the purchaser, and to gages which may be specified in individual cases.

Marking

11. The identification mark of the manufacturer and the pattern numbers assigned by the purchaser shall be cast on all castings of sufficient size, in such positions that they will not interfere with the service of the castings.

Inspection

12. (*a*) The inspector representing the purchaser shall have free entry, at all times while work on the contract of the purchaser is being performed, to all parts of the manufacturer's works that concern the manufacture of the material ordered. The manufacturer shall afford the inspector, without charge, all reasonable facilities to satisfy him that the material is being furnished in accordance with these specifications. All tests and inspection shall be made at the place of manufacture prior to shipment, unless otherwise specified, and shall be so conducted as not to interfere unnecessarily with the operation of the works.

(*b*) The manufacturer shall be required to keep a record of each melt from which castings are produced, showing tensile strength and elongation of test specimens cast from such melts. These records shall be available and shown to the inspector whenever required.

Rejection

13. Material that shows injurious defects subsequent to its acceptance at the manufacturer's works may be rejected, and, if rejected, shall be replaced by the manufacturer without charge to the purchaser.

SPECIFICATION FOR WELDED AND SEAMLESS STEEL PIPE

SA-53

(IDENTICAL WITH ASTM SPECIFICATION A 53-61T)

Scope

1. (*a*) This specification covers seamless and welded black and hot-dipped galvanized steel pipe furnished in the following types and grades:

Type F.—Furnace-butt welded.

Type E.—Electric-resistance welded, Grades A and B.

Type S.—Seamless, Grades A and B.

NOTE 1.—See the Appendix for definitions of types of pipe.

(*b*) Pipe ordered under this specification is nominal (average) wall thickness, suitable for welding, and suitable for forming operations involving coiling, bending and flanging, subject to the following qualifications:

(*1*) Type F is not intended for flanging.

(*2*) When Types S and E are required for close coiling or cold bending, Grade A should be specified. This provision is not intended to prohibit the cold bending of Grade B pipe.

(*3*) When pipe is required for close coiling, this should be so specified on the order.

Materials and Manufacture

2. The steel for both seamless and welded pipe shall be made by one or more of the following processes: open-hearth, electric-furnace, basic-oxygen, or acid-bessemer, except that steel for Grade B bessemer pipe shall be killed steel made by the deoxidized-acid-bessemer process.

NOTE 2.—Deoxidized-bessemer steel for seamless pipe is an acid bessemer steel which has had a considerable portion of dissolved oxygen removed as a gas by treatment in a vessel and has been further treated to develop a silicon content of 0.10 to 0.30 per cent, and with sufficient aluminum, or its equivalent, to insure practically no evolution of gases during solidification. (Killed-bessemer steel may also be deoxidized by treatment in the ladle with sufficient aluminum, or its equivalent, to insure practically no evolution of gases during solidification.)

Chemical Composition

3. The steel shall conform to the requirements as to chemical composition specified in Table I.

Check Analysis

4. (*a*) An analysis of two pipes from each lot of 500 lengths, or fraction thereof, may be made by the purchaser. Samples for chemical analysis, except for spectrographic analysis, shall be taken in accordance with the Method of Sampling Steel, Cast Iron, Open Hearth Iron, and Wrought Iron (ASTM Designation: E 59). The chemical composition thus determined shall conform to the requirements specified in Table I.

TABLE I.—CHEMICAL REQUIREMENTS.

		Phosphorus, max, per cent
Type S (seamless pipe)	open-hearth or basic-oxygen	0.048
	bessemer	0.11
Type F (furnace-welded pipe)	open-hearth or basic-oxygen	0.08
	bessemer	0.13
Type E (electric-resistance-welded)	open-hearth or basic-oxygen	0.050

(*b*) If the analysis of either pipe does not conform to the requirements specified in Table I, analyses shall be made on additional pipes of double the original number from the same lot, each of which shall conform to the requirements specified.

Tensile Properties

5. (*a*) The material shall conform to the requirements as to tensile properties prescribed in Table II.

(*b*) The yield point shall be determined by the drop of the beam or by the halt in the gage of the testing machine, by the use of dividers, or by other approved methods. When a definite yield point is not exhibited, the yield strength corresponding to a permanent offset of 0.2 per cent of the gage length of the specimen or to a total extension of 0.5 per cent of the gage length under load shall be determined.

(*c*) The test specimen taken across the weld shall show a tensile strength not less than the minimum tensile strength specified for the grade of pipe ordered. This test will not be required for pipe under 8 in. in outside diameter

Bending Properties

6. For pipe 2 in. and under in nominal diameter, a sufficient length of pipe shall stand being bent cold through 90 deg around a cylindrical mandrel, the diameter of which is twelve times the nominal diameter of the pipe, without developing cracks at any portion and without opening the weld. When ordered for close coiling, the pipe shall stand being bent cold through 180 deg around a cylindrical mandrel, the diameter of which is eight times the nominal diameter of the pipe, without failure. Double-extra-strong pipe over 1½ in. in diameter need not be subjected to the bend test.

TABLE II.—TENSILE REQUIREMENTS.

	Type F		Types E and S	
	Acid-Bessemer	Open-Hearth, Basic Oxygen, or Electric-Furnace	Grade A	Grade B
Tensile strength, min, psi	50 000	45 000	48 000	60 000
Yield point, min, psi	30 000	25 000	30 000	35 000
Elongation in 8 in., min, per cent	18[a]	20[a]	...	...
Elongation in 2 in., min, per cent:				
Basic minimum elongation for walls 5/16 in. and over in thickness, longitudinal strip tests, and for all small sizes tested in full section	...	...	35	30
When standard round 2-in. gage length test specimen is used	...	30	28	22
For longitudinal strip tests the width of the gage section shall be 1½ in. and a deduction for each 1/32-in. decrease in wall thickness below 5/16 in. from the basic minimum elongation of the following percentage	...	...	1.75[b]	1.50[b]

[a] Gage distances for measuring elongation on furnace-welded pipe of nominal sizes ¾ in. and smaller shall be as follows:

Nominal Size, in.	Gage Length, in.
¾ and ½	6
⅜ and ¼	4
⅛	2

[b] The following table gives the computed minimum values:

Wall Thickness, in.	Elongation in 2 in., min, per cent	
	Grade A	Grade B
5/16 (0.312)	35.00	30.00
9/32 (0.281)	33.25	28.50
¼ (0.250)	31.50	27.00
7/32 (0.219)	29.75	25.50
3/16 (0.188)	28.00	24.00
5/32 (0.156)	26.25	22.50
⅛ (0.125)	24.50	21.00
3/32 (0.094)	22.75	19.50
1/16 (0.062)	21.00	18.00

NOTE.—The above table gives the computed minimum elongation values for each 1/32-in. decrease in wall thickness. Where the wall thickness lies between two values shown above, the minimum elongation value shall be determined by the following formula:

Grade	Formula
A	$E = 56\,t + 17.50$
B	$E = 48\,t + 15.00$

where:
E = elongation in 2 in. in per cent, and
t = actual thickness of specimen, in inches.

(*b*) *Seamless Pipe.*—For seamless pipe a section not less than 2½ in. in length shall be flattened cold between parallel plates in two steps. During the first step, which is a test for ductility, no cracks or breaks on the inside or outside or end surfaces shall occur until the distance between the plates (Table III) is less than the value of "*H*" calculated by the following formula:

$$H = \frac{(1 + e)t}{e + t/D}$$

where:

H = distance between flattening plates, in inches (Note 3),
e = deformation per unit length (constant for a given grade of steel, 0.09 for Grade A and 0.07 for Grade B),
t = nominal wall thickness of pipe, in inches, and
D = actual outside diameter of pipe, in inches.

During the second step, which is a test for soundness, the flattening shall be continued until the specimen breaks or the opposite walls of the pipe meet. Evidence of laminated or unsound material that is revealed during the entire flattening test shall be cause for rejection.

TABLE III.—FLATTENING REQUIREMENTS.

Kind of Pipe	Distance Between Plates, "H"
Butt-welded	60 per cent of outside diameter
Electric-resistance-welded, Grades A and B	one-third of outside diameter
Seamless, Grades A and B	to the distance "H"

NOTE 3.—The "H" values have been calculated for standard and extra-heavy weight sizes from 2½ to 24 in., inclusive, and are shown in Table IV.

(*c*) *Electric-Resistance-Welded Steel Produced in Single Lengths.*—The crop ends cut from each end of each length shall be flattened between parallel plates until opposite walls of the pipe meet. The tests from each end shall be made alternately with the welds at 0 deg and 90 deg (point of maximum bending). No opening in the weld shall take place until the distance between the plates is less than two thirds of the original outside diameter of the pipe, and no cracks or breaks in the metal, elsewhere than in the weld, shall occur until the distance between the plates is less than one third of the original outside diameter of the pipe. Also, evidence of laminations or burnt metal shall not develop during

Flattening Test

7. (*a*) The flattening test shall be made on standard weight and extra strong pipe over 2 in. in nominal diameter. It shall not be required for double extra strong pipe.

the entire flattening operation. If any crop end fails to conform to these requirements, additional tests shall be made on specimens cut from the same end of the same length of pipe until the requirements are met, except that the finished pipe shall not be shorter than 80 per cent of its length after the initial cropping. Precautions shall be taken that crop ends can be identified with respect to the length of pipe from which they were cut.

(*d*) *Electric-Resistance-Welded Steel Produced in Multiple Lengths and Subsequently Cut into Single Lengths.*—A flattening test shall be made as described in Paragraph (*c*) on test specimens cut from each end of each multiple length with the weld at 90 deg (point of maximum bending). Tests also shall be made on two intermediate rings cut from each multiple length of pipe with the weld at 0 deg. If any of the specimens fail to conform to the requirements specified in Paragraph (*c*) the manufacturer may elect to make retests cut from each end of each individual length as provided in Paragraph (*c*). The retests for each end of each individual length for electric-resistance-welded steel pipe shall be made with the welds alternately at 0 deg and 90 deg.

(*e*) *Butt Welded Pipe.*—For butt welded pipe a specimen not less than 4 in. in length shall be flattened cold between parallel plates in three steps. The weld shall be located 45 deg from the line of direction of force. During the first step, which is a test for quality of the weld, no cracks or breaks on the inside, outside or end surfaces shall occur until the distance between the plates is less than three fourths of the original outside diameter for butt welded pipe. As a second step, the flattening shall be continued. During the second step, which is a test for ductility exclusive of the weld, no cracks or breaks on the inside, outside or end surfaces shall occur until the distance between the plates is less than 60 per cent of the original outside diameter for butt welded pipe. During the third step, which is a test for soundness, the flattening shall be continued until the specimen breaks or the opposite walls of the pipe meet. Evidence of laminated or unsound material or of incomplete weld that is revealed during the entire flattening test shall be cause for rejection.

(*f*) Surface imperfections in the test specimen before flattening, but revealed during the first step of the flattening test, shall be judged in accordance with the finish requirements in Section 16.

(*g*) Superficial ruptures as a result of surface imperfections shall not be cause for rejection.

Hydrostatic Test

8. (*a*) Each length of plain-end pipe shall be tested at the mill to the hydrostatic pressures prescribed in Table V, and each threaded-and-coupled length shall be hydrostatically tested to pressures prescribed in Table VI. The hydrostatic test may be applied, at the discretion of the manufacturer, on pipe with plain ends, with threads only, or with threads and couplings. Welded pipe 2 in. and larger shall be jarred near one end while under test pressure.

(*b*) The maximum hydrostatic test pressure shall not exceed 2500 psi for nominal sizes 3 in. and under, or 2800 psi for all nominal sizes over 3 in. The hydrostatic pressure shall be maintained for not less than 5 sec for all sizes of seamless and electric-welded pipe.

Methods of Test

9. (*a*) The test specimens and the tests required by this specification shall conform to those described in the latest issue of the Methods and Definitions for the Mechanical Testing of Steel Products (ASTM Designation: A 370).

(*b*) The longitudinal tension test specimen shall be taken from the end of the pipe or, by agreement between the manufacturer and the purchaser, may be taken from the skelp, at a point approximately 90 deg from the weld, and shall not be flattened between gage marks. The sides of each specimen shall be parallel between gage marks. If desired, the tension test may be made on the full section of pipe. When impracticable to pull a test specimen in full thickness, the standard 2 in. gage length tension test specimen shown in Fig. 6 of Methods A 370 may be used.

(*c*) Transverse weld test specimens from electric-welded pipe shall be taken with the weld at the center of the specimen. All transverse test specimens shall be approximately 1½ in. wide in the gage length and shall represent the full wall thickness of the pipe from which the specimen was cut.

(*d*) Test specimens for the bend and flattening tests shall consist of sections cut from a pipe. Specimens for flattening tests shall be smooth on the ends and free from burrs, except when made on crop ends taken from welded pipe.

(*e*) All specimens shall be tested at room temperature.

Number of Tests

10. (*a*) One of each of the tests specified in Sections 5, 6, and 7, except 7(*c*), shall be made on one length of pipe from each lot of 500 lengths, or fraction thereof, of each size. A length is defined as the length as ordered, except that in the case of orders for cut lengths shorter than single random, the term lot shall apply to the lengths as rolled, prior to cutting to the required short lengths.

(*b*) The flattening test specified in Section 7(*c*) shall be made on both crop ends from each length of pipe.

(*c*) In the case of welded pipe ordered for flanging, the crop ends cut from each length shall be subjected to the flattening test specified in Section 7.

(*d*) Each length of pipe shall be subjected to the hydrostatic test specified in Section 8.

Retests

11. (*a*) If the results of the mechanical tests of any lot do not conform to the requirements specified in Sections 5, 6 and 7, retests may be made on additional pipe of double the original number from the same lot, each of which shall conform to the requirements specified.

(*b*) If any section fails when flattening tests are made on the crop ends of each length of welded pipe, other pieces from the length may be cut until satisfactory tests are obtained, otherwise the length shall be rejected.

Dimensions and Weights

12. (*a*) The dimensions and weights of plain-end pipe included in this specification are listed in Table V. Dimensions and weights of threaded-and-coupled pipe are listed in Table VI.

(*b*) The dimensions and weights furnished under this specification are included in the American Standard for Steel and Wrought-Iron Pipe (ASA B36.10-1959).

Permissible Variations in Weight and Dimensions

13. (*a*) *Weight.*—The weight of the pipe as specified in Tables V and VI shall not vary by more than the following amounts:

Extra-strong and lighter wall thickness.	±5 per cent
Heavier than extra-strong wall thickness.	±10 per cent

(*b*) *Diameter.*—For pipe 1½ in. and under in nominal diameter, the outside diameter at any point shall not vary more than $\frac{1}{64}$ in. over nor more than $\frac{1}{32}$ in. under the standard specified. For pipe 2 in. and over in nominal diameter, the outside diameter shall not vary more than ±1 per cent from the standard specified.

(*c*) *Thickness.*—The minimum wall thickness at any point shall be not more than 12.5 per cent under the nominal wall thickness specified. The minimum wall thickness on inspection shall conform to the requirements in Table VII.

Lengths

14. Unless otherwise specified, pipe lengths shall be in accordance with the following regular practice:

(*a*) Pipe of weights lighter than extra-strong shall be in single-random lengths of 16 to 22 ft, but not more than 5 per cent of the total number of threaded lengths may be jointers, which are two pieces coupled together. When ordered with plain ends, 5 per cent may be in lengths of 12 to 16 ft.

(*b*) Pipe of extra-strong and heavier weights shall be in random lengths of 12 to 22 ft. Five per cent may be in lengths of 6 to 12 ft.

(*c*) When extra-strong or lighter pipe is ordered in double-random lengths, the minimum lengths shall be not less than 22 ft, with a minimum average for the order of 35 ft.

(*d*) When lengths longer than single random are required for wall thicknesses heavier than extra-strong, the length shall be subject to negotiation.

End Finish

15. (*a*) *Plain End.*—Pipe sizes and weights shown in Table V ordered with plain ends shall be furnished to the following regular practices, unless otherwise specified:

(*1*) Pipe of standard or extra-strong weights, or in wall thicknesses less than 0.500 in., other than double-extra-strong pipe, shall be plain end beveled.

(*2*) Pipe with wall thicknesses over 0.500 in. and all double-extra-strong pipe shall be plain end cut square.

(*3*) Plain end pipe ¾ in. and smaller shall be square cut.

(*b*) *Threaded End.*—The sizes and weights shown in Table VI may be ordered with threads and couplings, and when so ordered, the ends shall be provided with threads in accordance with the gaging practice of the American Standard for Pipe Threads (ASA B2.1-1945). The variation from standard, when tested with the standard working gage, shall not exceed 1½ turns either way. For standard-weight pipe in sizes 6 in. and smaller, refer to Table VIII for basic threading data, and Fig. 1 for an illustration of the joint. For standard-weight pipe in sizes 8 in. and larger and for all sizes of extra-strong-weight and double-extra-strong-weight pipe, refer to Table IX for basic threading data and Fig. 2 for an illustration of the joint.

(*c*) *Couplings.*—Each length of threaded pipe shall be provided with one coupling, unless otherwise specified. The coupling threads shall be in accordance with the gaging practice of the American Standard for Pipe Threads (ASA B2.1-1945). The coupling shall be applied hand-tight, unless power-tight is specified on the order. Couplings may be wrought-iron or steel. Taper-tapped couplings shall be furnished on all weights of threaded pipe 2½ in. and larger. For sizes 2 in. and smaller, it is regular practice to furnish straight-tapped couplings for standard-weight pipe and taper-tapped couplings for extra-strong and double-extra-strong pipe, and standard-weight pipe 8 in. and larger. If taper-tapped couplings are required for sizes 2 in. and under on standard-weight pipe, line pipe in accordance with Specification 5L of the American Petroleum Institute should be ordered. The taper-tapped couplings provided on line pipe in these sizes may be used on mill-threaded standard-weight pipe of the same size.

Galvanized Pipe

16. (*a*) Galvanized pipe ordered under this specification shall be coated with zinc inside and outside by the hot-dip process. The zinc used for the coating shall be any grade of zinc conforming to the Specification for Slab Zinc (Spelter) (ASTM Designation: B 6).

(*b*) *Weight of Coating.*—The weight of zinc coating shall be not less than 2.0 oz per sq ft of total coated surface as determined in the manner prescribed in Section 16(*c*). The weight of coating expressed in ounces per square foot shall be calculated by dividing the total weight of zinc, inside plus outside, by the total area, inside plus outside, of the surface coated.

(*c*) *Weight of Coating Test.*—The weight of zinc coating shall be determined by a stripping test in accordance with the Methods of Test for Weight of Coating on Zinc-Coated (Galvanized) Iron or Steel Articles (ASTM Designation: A 90). The total zinc on each specimen shall be determined in a single stripping operation and the average of the results from the two specimens from each pipe shall be the weight of zinc coating.

(*d*) *Test Specimens.*—Test specimens for determination of weight of coating shall be cut approximately 4 in. in length from opposite ends of the lengths of pipe selected for testing.

(*e*) *Number of Tests.*—Two test specimens for the determination of weight of coating shall be taken, one from each end of one length of galvanized pipe selected at random from each lot of 500 lengths, or fraction thereof, of each size.

(*f*) *Retests.*—If the weight of coating of any lot does not conform to the requirements specified in Section 16(*b*), retests of two additional pipes from the same lot shall be made, each of which shall conform to the requirements specified.

(*g*) When pipe ordered under this specification is to be galvanized, the tension, flattening and bend tests shall be made on the base material before galvanizing. When specified, results of the mechanical tests on the base material shall be reported to the purchaser. If impracticable to make the mechanical

tests on the base material before galvanizing, such tests may be made on galvanized samples, and any flaking or cracking of the zinc coating shall not be considered cause for rejection. When galvanized pipe is bent or otherwise fabricated to a degree which causes the zinc coating to stretch or compress beyond the limit of elasticity, some flaking of the coating may occur.

Workmanship

17. The finished pipe shall be reasonably straight and free from injurious defects. All burrs at the ends of the pipe shall be removed.

Marking

18. (*a*) Each length of pipe shall be legibly marked by rolling, stamping or stenciling to show: the name or brand of the manufacturer; the kind of pipe, that is, furnace-butt-welded, electric-resistance-welded A, electric-resistance-welded B, seamless A, or seamless B; the use of electric-furnace, basic-oxygen, or acid-bessemer steel; XS for extra strong, XXS for double extra strong; ASTM A 53; and the length.

(*b*) For small diameter pipe which is bundled, this information may be marked on a tag securely attached to each bundle.

Inspection

19. The inspector representing the purchaser shall have free entry, at all times while work on the contract of the purchaser is being performed, to all parts of the manufacturer's works that concern the manufacture of the material ordered. The manufacturer shall afford the inspector, without charge, all reasonable facilities to satisfy him that the material is being furnished in accordance with this specification. All tests (except check analysis) and inspection shall be made at the place of manufacture prior to shipment, unless otherwise specified, and shall be so conducted as not to interfere unnecessarily with the operation of the works.

Rejection

20. Each length of pipe that develops injurious defects during shop working or application operations will be rejected and the manufacturer shall be notified.

APPENDIX

Definitions of Types of Pipe

1A. *Type F, Furnace-Butt-Welded Pipe, Bell-Welded.*—Pipe produced in individual lengths from cut-length skelp, having its longitudinal butt joint forge welded by the mechanical pressure developed in drawing the furnace-heated skelp through a cone-shaped die (commonly known as the "welding bell") which serves as a combined forming and welding die.

2A. *Type F, Furnace-Butt-Welded Pipe, Continuous-Welded.*—Pipe produced in continuous lengths from coiled skelp and subsequently cut into individual lengths, having its longitudinal butt joint forge welded by the mechanical pressure developed in rolling the hot-formed skelp through a set of round pass welding rolls.

3A. *Type E, Electric-Resistance-Welded Pipe.*—Pipe produced in individual lengths or in continuous lengths from coiled skelp and subsequently cut into individual lengths, having a longitudinal butt joint wherein coalescence is produced by the heat obtained from resistance of the pipe to the flow of electric current in a circuit of which the pipe is a part, and by the application of pressure.

4A. *Type S, Wrought Steel Seamless Pipe.*—Wrought steel seamless pipe is a tubular product made without a welded seam. It is manufactured by hot working steel and, if necessary, by subsequently cold finishing the hot-worked tubular product to produce the desired shape, dimensions, and properties.

Tables for Chemical and Dimensional Requirements

APPENDIX I

TABLE IV.—CALCULATED "H" VALUES FOR SEAMLESS PIPE.

Size (Nominal Inside Diameter), in.	Outside Diameter, in.	Wall Thickness, in.	Distance, in Inches, Between Plates "H" by Formula: $H = \frac{(1+e)T}{e+t/d}$	
			Grade A	Grade B
2½	2.875	0.203	1.378	1.545
		0.276	1.618	1.779
3	3.500	0.216	1.552	1.755
		0.300	1.861	2.062
3½	4.000	0.226	1.682	1.912
		0.318	2.045	2.276
4	4.500	0.237	1.811	2.067
		0.337	2.228	2.489
5	5.563	0.258	2.062	2.372
		0.375	2.507	2.920
6	6.625	0.280	2.308	2.669
		0.432	3.034	3.419
8	8.625	0.277	2.473	2.902
		0.322	2.757	3.210
		0.500	3.683	4.181
10	10.750	0.279[a]	2.623	3.111
		0.307	2.823	3.333
		0.365	3.210	3.757
		0.500	3.993	4.592
12	12.750	0.330	3.105	3.683
		0.375	3.423	4.037
		0.500	4.218	4.899
14	14.000	0.375	3.500	4.146
		0.500	4.336	5.061
16	16.000	0.375	3.603	4.294
		0.500	4.494	5.284
18	18.000	0.375	3.688	4.417
		0.500	4.628	5.472
20	20.000	0.375	3.758	4.521
		0.500	4.740	5.632
24	24.000	0.375	3.869	4.686
		0.500	4.918	5.890

[a] Special order only.

TABLE V.—DIMENSIONS, WEIGHTS, AND TEST PRESSURES FOR PLAIN END PIPE.

Nominal Size, in.	Outside Diameter, in.	Wall Thickness, in.	Nominal Weight per ft, Plain End, lb	Weight Class	Schedule No.	Test Pressure, psi		
						Butt-Welded	Grade A	Grade B
⅛	0.405	0.068	0.24	STD	40	700	700	700
		0.095	0.31	XS	80	850	850	850
¼	0.540	0.088	0.42	STD	40	700	700	700
		0.119	0.54	XS	80	850	850	850
⅜	0.675	0.091	0.57	STD	40	700	700	700
		0.126	0.74	XS	80	850	850	850
½	0.840	0.109	0.85	STD	40	700	700	700
		0.147	1.09	XS	80	850	850	850
		0.294	1.71	XXS	...	1000	1000	1000
¾	1.050	0.113	1.13	STD	40	700	700	700
		0.154	1.47	XS	80	850	850	850
		0.308	2.44	XXS	...	1000	1000	1000
1	1.315	0.133	1.68	STD	40	700	700	700
		0.179	2.17	XS	80	850	850	850
		0.358	3.66	XXS	....	1000	1000	1000
1¼	1.660	0.140	2.27	STD	40	1000	1000	1100
		0.191	3.00	XS	80	1300	1500	1600
		0.382	5.21	XXS	....	1400	1800	1900
1½	1.900	0.145	2.72	STD	40	1000	1000	1100
		0.200	3.63	XS	80	1300	1500	1600
		0.400	6.41	XXS	....	1400	1800	1900
2	2.375	0.154	3.65	STD	40	1000	2300	2500
		0.218	5.02	XS	80	1300	2500	2500
		0.344	7.46	....	160	....	2500	2500
		0.436	9.03	XXS	....	1400	2500	2500
2½	2.875	0.203	5.79	STD	40	1000	2500	2500
		0.276	7.66	XS	80	1300	2500	2500
		0.375	10.01	....	160	1400	2500	2500
		0.552	13.70	XXS	....	1400	2500	2500
3	3.500	0.188	6.63	....	....	....	....	....
		0.216	7.58	STD	40	1000	2200	2500
		0.300	10.25	XS	80	1300	2500	2500
		0.438	14.31	....	160	....	2500	2500
		0.600	18.58	XXS	....	....	2500	2500
3½	4.000	0.188	7.63	....	....	....	....	....
		0.226	9.11	STD	40	1200	2000	2400
		0.318	12.51	XS	80	1700	2800	2800
4	4.500	0.156	7.25	....	....	....	....	....
		0.188	8.64	....	....	....	....	....
		0.219	10.00	....	....	....	....	....
		0.237	10.79	STD	40	1200	1900	2200
		0.337	14.98	XS	80	1700	2700	2800
		0.438	18.98	....	120	....	2800	2800
		0.531	22.52	....	160	....	2800	2800
		0.674	27.54	XXS	....	....	2800	2800
5	5.563	0.258	14.62	STD	40	....	1700	1900
		0.375	20.78	XS	80	....	2400	2800
		0.500	27.04	....	120	....	2800	2800
		0.625	32.96	....	160	....	2800	2800
		0.750	38.55	XXS	....	....	2800	2800

TABLE V.—*Continued*

Nominal Size, in.	Outside Diameter, in.	Wall Thickness, in.	Nominal Weight per Foot, Plain End, lb	Weight Class	Schedule No.	Test Pressure, psi		
						Butt-Welded	Grade A	Grade B
6	6.625	0.280	18.97	STD	40	....	1500	1800
		0.432	28.57	XS	80	....	2300	2700
		0.562	36.42	....	120	....	2800	2800
		0.719	45.34	....	160	....	2800	2800
		0.864	53.16	XXS	....	....	2800	2800
8	8.625	0.250	22.36	....	20	....	1000	1200
		0.277	24.70	....	30	....	1200	1300
		0.322	28.55	STD	40	....	1300	1600
		0.406	35.66	....	60	....	1700	2000
		0.500	43.39	XS	80	....	2100	2400
		0.594	50.93	....	100	....	2500	2800
		0.719	60.69	....	120	....	2800	2800
		0.812	67.79	....	140	....	2800	2800
		0.875	72.42	XXS	....	....	2800	2800
		0.906	74.71	....	160	....	2800	2800
10	10.750	0.250	28.04	....	20	....	850	1000
		0.279	31.20	....	....	....	950	1100
		0.307	34.24	....	30	....	1000	1200
		0.365	40.48	STD	40	....	1200	1400
		0.500	54.74	XS	60	....	1700	2000
		0.594	64.40	....	80	....	2000	2300
		0.719	77.00	....	100	....	2400	2800
		0.844	89.27	....	120	....	2800	2800
		1.000	104.13	XXS	140	....	2800	2800
		1.125	115.65	....	160	....	2800	2800
12	12.750	0.250	33.38	....	20	....	700	800
		0.330	43.77	....	30	....	950	1100
		0.375	49.56	STD	....	....	1100	1200
		0.406	53.56	....	40	....	1100	1300
		0.500	65.42	XS	....	....	1400	1600
		0.562	73.22	....	60	....	1600	1900
		0.688	88.57	....	80	....	1900	2300
		0.844	107.29	....	100	....	2400	2800
		1.000	125.49	XXS	120	....	2800	2800
		1.125	139.68	....	140	....	2800	2800
		1.312	160.33	....	160	....	2800	2800
14	14.000	0.250	36.71	....	10	....	650	750
		0.312	45.68	....	20	....	800	950
		0.375	54.57	STD	30	....	950	1100
		0.438	63.37	....	40	....	1100	1300
		0.500	72.09	XS	....	....	1300	1500
		0.594	85.01	....	60	....	1500	1800
		0.750	106.13	....	80	....	1900	2300
		0.938	130.79	....	100	....	2400	2800
		1.094	150.76	....	120	....	2800	2800
		1.250	170.22	....	140	....	2800	2800
		1.406	189.15	....	160	....	2800	2800
16	16.000	0.250	42.05	....	10	....	550	650
		0.312	52.36	....	20	....	700	800
		0.375	62.58	STD	30	....	850	1000
		0.500	82.77	XS	40	....	1100	1300
		0.656	107.54	....	60	....	1500	1700
		0.844	136.58	....	80	....	1900	2200
		1.031	164.86	....	100	....	2300	2700
		1.219	192.40	....	120	....	2700	2800
		1.438	223.57	....	140	....	2800	2800
		1.594	245.22	....	160	....	2800	2800

TABLE V.—*Concluded.*

Nominal Size, in.	Outside Diameter, in.	Wall Thickness, in.	Nominal Weight per ft, Plain End, lb	Weight Class	Schedule No.	Test Pressure psi		
						Butt-Welded	Grade A	Grade B
18	18.000	0.250	47.39	....	10	....	500	600
		0.312	59.03	....	20	....	600	750
		0.375	70.59	STD	....	....	750	900
		0.438	82.06	....	30	....	900	1000
		0.500	93.45	XS	....	....	1000	1200
		0.562	104.76	....	40	....	1100	1300
		0.750	138.17	....	60	....	1500	1800
		0.938	170.84	....	80	....	1900	2200
		1.156	208.00	....	100	....	2300	2700
		1.375	244.14	....	120	....	2800	2800
		1.562	274.30	....	140	....	2800	2800
		1.781	308.55	....	160	....	2800	2800
20	20.000	0.250	52.73	....	10	....	450	500
		0.375	78.60	STD	20	....	700	800
		0.500	104.13	XS	30	....	900	1000
		0.594	123.06	....	40	....	1100	1200
		0.812	166.50	....	60	....	1500	1700
		1.031	208.92	....	80	....	1900	2200
		1.281	256.15	....	100	....	2300	2700
		1.500	296.37	....	120	....	2700	2800
		1.750	341.10	....	140	....	2800	2800
		1.969	379.14	....	160	....	2800	2800
24	24.000	0.250	63.41	....	10	....	400	450
		0.375	94.62	STD	20	....	550	650
		0.500	125.49	XS	....	....	750	900
		0.562	140.80	....	30	....	850	1000
		0.688	171.17	....	40	....	1000	1200
		0.938	230.92	....	....	....	....	....
		0.969	238.29	....	60	....	1500	1700
		1.219	296.53	....	90	....	1800	2100
		1.531	367.45	....	100	....	2300	2700
		1.812	429.50	....	120	....	2700	2800
		2.062	483.24	....	140	....	2800	2800
		2.344	542.09	....	160	....	2800	2800

TABLE VI.—DIMENSIONS, WEIGHTS, AND TEST PRESSURES FOR THREADED AND COUPLED PIPE.

Nominal Size, in.	Outside Diameter, in.	Wall Thickness, in.	Nominal Weight per ft, Threads and Couplings, lb	Weight Class	Schedule No.	Test Pressure, psi		
						Butt-Welded	Grade A	Grade B
⅛	0.405	0.068	0.24	STD	40	700	700	700
		0.095	0.32	XS	80	850	850	850
¼	0.540	0.088	0.42	STD	40	700	700	700
		0.119	0.54	XS	80	850	850	850
⅜	0.675	0.091	0.57	STD	40	700	700	700
		0.126	0.74	XS	80	850	850	850
½	0.840	0.109	0.85	STD	40	700	700	700
		0.147	1.09	XS	80	850	850	850
		0.294	1.72	XXS	....	1000	1000	1000

TABLE VI.—*Concluded*

Nominal Size, in.	Outside Diameter, in.	Wall Thickness, in.	Nominal Weight per ft, Threads and Couplings, lb	Weight Class	Schedule No.	Test Pressure, psi		
						Butt-Welded	Grade A	Grade B
¾	1.050	0.113	1.13	STD	40	700	700	700
		0.154	1.48	XS	80	850	850	850
		0.308	2.44	XXS	....	1000	1000	1000
1	1.315	0.133	1.68	STD	40	700	700	700
		0.179	2.18	XS	80	850	850	850
		0.358	3.66	XXS	....	1000	1000	1000
1¼	1.660	0.140	2.28	STD	40	800	1000	1100
		0.191	3.02	XS	80	1300	1500	1600
		0.382	5.22	XXS	....	1400	1800	1900
1½	1.900	0.145	2.73	STD	40	800	1000	1100
		0.200	3.66	XS	80	1300	1500	1600
		0.400	6.41	XXS	....	1400	1800	1900
2	2.375	0.154	3.68	STD	40	800	1000	1100
		0.218	5.07	XS	80	1300	1500	1600
		0.436	9.03	XXS	....	1400	1800	1900
2½	2.875	0.203	5.82	STD	40	800	1000	1100
		0.276	7.73	XS	80	1300	1500	1600
		0.552	13.70	XXS	....	1400	1800	1900
3	3.500	0.216	7.62	STD	40	800	1000	1100
		0.300	10.33	XS	80	1300	1500	1600
		0.600	18.57	XXS	....	....	1800	1900
3½	4.000	0.226	9.20	STD	40	1200	1200	1300
		0.318	12.63	XS	80	1700	1700	1800
4	4.500	0.237	10.89	STD	40	1200	1200	1300
		0.337	15.17	XS	80	1700	1700	1800
		0.674	27.58	XXS	....	....	2000	2100
5	5.563	0.258	14.81	STD	40	....	1200	1300
		0.375	21.09	XS	80	....	1700	1800
		0.750	38.61	XXS	....	....	2000	2100
6	6.625	0.280	19.18	STD	40	....	1200	1300
		0.432	28.89	XS	80	....	1700	1800
		0.864	53.14	XXS	....	....	2000	2100
8	8.625	0.277	25.55	....	30	....	1200	1300
		0.322	29.35	STD	40	....	1300	1600
		0.500	43.90	XS	80	....	2100	2400
		0.875	72.44	XXS	....	....	2800	2800
10	10.750	0.279	32.75	....	....	....	950	1100
		0.307	35.75	....	30	....	1000	1200
		0.365	41.85	STD	40	....	1200	1400
		0.500	55.82	XS	60	....	1700	2000
12	12.750	0.330	45.45	....	30	....	950	1100
		0.375	51.15	STD	....	....	1100	1200
		0.500	66.71	XS	....	....	1400	1600

TABLE VII.—TABLE OF MINIMUM WALL THICKNESSES ON INSPECTION FOR NOMINAL (AVERAGE) PIPE WALL THICKNESSES.

NOTE 1.—The following formula, upon which this table is based, may be applied to calculate minimum wall thickness from nominal (average) wall thickness:

$$t_n \times 0.875 = t_m$$

where:
t_n = nominal (average) wall thickness in inches, and
t_m = minimum wall thickness in inches.

The wall thickness is expressed to three decimal places the fourth decimal place being carried forward or dropped in accordance with the Recommended Practices for Designating Significant Places in Specified Limiting Values (ASTM Designation: E 29).

NOTE 2.—This table is a master table covering wall thicknesses available in the purchase of different classifications of pipe, but it is not meant to imply that all of the walls listed therein are obtainable under this specification.

Nominal (Average) Thickness (t_n), in.	Minimum Thickness on Inspection (t_m), in.	Nominal (Average) Thickness (t_n), in.	Minimum Thickness on Inspection (t_m), in.	Nominal (Average) Thickness (t_n), in.	Minimum Thickness on Inspection (t_m), in.
0.068	0.060	0.294	0.257	0.750	0.656
0.088	0.077	0.300	0.262	0.812	0.710
0.091	0.080	0.307	0.269	0.844	0.739
0.095	0.083	0.308	0.270	0.864	0.756
0.109	0.095	0.312	0.273	0.875	0.766
0.113	0.099	0.318	0.278	0.906	0.793
0.119	0.104	0.322	0.282	0.938	0.821
0.125	0.109	0.330	0.289	0.968	0.847
0.126	0.110	0.337	0.295	1.000	0.875
0.133	0.116	0.343	0.300	1.031	0.902
0.140	0.122	0.344	0.301	1.062	0.929
0.145	0.127	0.358	0.313	1.094	0.957
0.147	0.129	0.365	0.319	1.125	0.984
0.154	0.135	0.375	0.328	1.156	1.012
0.156	0.136	0.382	0.334	1.219	1.067
0.179	0.157	0.400	0.350	1.250	1.094
0.187	0.164	0.406	0.355	1.281	1.121
0.188	0.164	0.432	0.378	1.312	1.148
0.191	0.167	0.436	0.382	1.343	1.175
0.200	0.175	0.437	0.382	1.375	1.203
0.203	0.178	0.438	0.383	1.406	1.230
0.216	0.189	0.500	0.438	1.438	1.258
0.218	0.191	0.531	0.465	1.500	1.312
0.219	0.192	0.552	0.483	1.531	1.340
0.226	0.198	0.562	0.492	1.562	1.367
0.237	0.207	0.594	0.520	1.594	1.395
0.250	0.219	0.600	0.525	1.750	1.531
0.258	0.226	0.625	0.547	1.781	1.558
0.276	0.242	0.656	0.574	1.812	1.586
0.277	0.242	0.674	0.590	1.968	1.722
0.279	0.244	0.688	0.602	2.062	1.804
0.280	0.245	0.719	0.629	2.344	2.051
0.281	0.246				

APPENDIX III

TABLE VIII.—BASIC THREADING DATA FOR STANDARD-WEIGHT PIPE SIZES 6 IN. AND UNDER.

NOTE 1.—All dimensions in this table are nominal and subject to mill tolerances.
NOTE 2.—The taper of threads is ¾ in. per ft on the diameter.

Pipe		Threads					Coupling		
Nominal Size, in.	Outside Diameter, in. D	Number per Inch	End of Pipe to Hand Tight Plane, in. L_1	Effective Length, in. L_2	Total Length, in. L_4	Pitch Diameter at Hand Tight Plane, in. E_1	Outside Diameter, in. W	Length, in. N_L	Hand Tight Stand-Off (Number of Threads) A
⅛	0.405	27	0.180	0.2638	0.3924	0.37476	0.563	1 3/16	4
¼	0.540	18	0.200	0.4018	0.5946	0.48989	0.719	1 3/16	5½
⅜	0.675	18	0.240	0.4078	0.6006	0.62701	0.875	1 3/16	5
½	0.840	14	0.320	0.5337	0.7815	0.77843	1.063	1 5/16	5
¾	1.050	14	0.339	0.5457	0.7935	0.98887	1.313	1 5/8	5
1	1.315	11½	0.400	0.6828	0.9845	1.23863	1.576	2	5
1¼	1.660	11½	0.420	0.7068	1.0085	1.58338	1.900	2 1/16	5
1½	1.900	11½	0.420	0.7235	1.0252	1.82234	2.200	2 1/16	5½
2	2.375	11½	0.436	0.7565	1.0582	2.29627	2.750	2⅛	5½
2½	2.875	8	0.682	1.1375	1.5712	2.76216	3.250	3⅛	5½
3	3.500	8	0.766	1.2000	1.6337	3.38850	4.000	3¼	5½
3½	4.000	8	0.821	1.2500	1.6837	3.88881	4.625	3⅜	5½
4	4.500	8	0.844	1.3000	1.7337	4.38713	5.000	3½	5
5	5.563	8	0.937	1.4063	1.8400	5.44929	6.296	3¾	5
6	6.625	8	0.958	1.5125	1.9462	6.50597	7.390	4	6

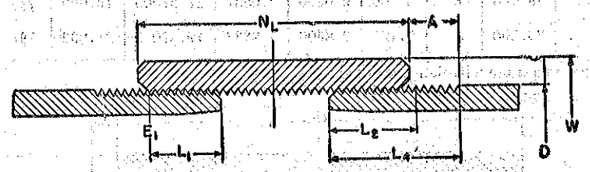

FIG. 1.—Dimensions of Hand Tight Assembly for Use with Table VIII.

TABLE IX.—BASIC THREADING DATA FOR STANDARD-WEIGHT PIPE IN SIZES 8 IN. AND LARGER, AND ALL SIZES OF EXTRA-STRONG AND DOUBLE-EXTRA-STRONG WEIGHT.

NOTE.—The taper of threads is ¾ in. per ft on the diameter.

Pipe		Threads					Coupling		
Nominal Size, in.	Outside Diameter, in. D	Number per Inch	End of Pipe to Hand Tight Plane, in. L_1	Effective Length, in. L_2	Total Length, in. L_4	Pitch Diameter at Hand Tight Plane, in. E_1	Outside Diameter, in. W	Length, in. N_L	Hand Tight Stand-Off (Number of Threads) A
⅛	0.405	27	0.180	0.2638	0.3924	0.37476	0.563	1 1/16	3
¼	0.540	18	0.200	0.4018	0.5946	0.48989	0.719	1 5/8	3
⅜	0.675	18	0.240	0.4078	0.6006	0.62701	0.875	1 5/8	3
½	0.840	14	0.320	0.5337	0.7815	0.77843	1.063	2 1/16	3
¾	1.050	14	0.339	0.5457	0.7935	0.98887	1.313	2 1/16	3
1	1.315	11½	0.400	0.6828	0.9845	1.23863	1.576	2 5/8	3
1¼	1.660	11½	0.420	0.7068	1.0085	1.58338	2.054	2 3/4	3
1½	1.900	11½	0.420	0.7235	1.0252	1.82234	2.200	2 3/4	3
2	2.375	11½	0.436	0.7565	1.0582	2.29627	2.875	2 7/8	3
2½	2.875	8	0.682	1.1375	1.5712	2.76216	3.375	4 1/8	2
3	3.500	8	0.766	1.2000	1.6337	3.38850	4.000	4 1/4	2
3½	4.000	8	0.821	1.2500	1.6837	3.88881	4.625	4 3/8	2
4	4.500	8	0.844	1.3000	1.7337	4.38713	5.200	4½	2
5	5.563	8	0.937	1.4063	1.8400	5.44929	6.296	4 5/8	2
6	6.625	8	0.958	1.5125	1.9462	6.50597	7.390	4 7/8	2
8	8.625	8	1.063	1.7125	2.1462	8.50003	9.625	5¼	2
10	10.750	8	1.210	1.9250	2.3587	10.62094	11.750	5¾	2
12	12.750	8	1.360	2.1250	2.5587	12.61781	14.000	6⅛	2
14[a]	14.000	8	1.562	2.2500	2.6837	13.87263	15.000	6⅜	2
16[a]	16.000	8	1.812	2.4500	2.8837	15.87575	17.000	6¾	2
18[a]	18.000	8	2.000	2.6500	3.0837	17.87500	19.000	7⅛	2
20[a]	20.000	8	2.125	2.8500	3.2837	19.87031	21.000	7⅝	2

[a] Nominal size is outside diameter.

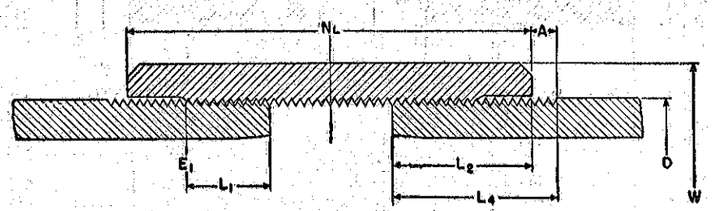

FIG. 2.—Dimensions of Hand Tight Assembly for Use with Table IX.

SPECIFICATION FOR WELDED WROUGHT IRON PIPE

SA-72

(IDENTICAL WITH ASTM SPECIFICATION A 72-61T)

Scope

1. (*a*) These specifications cover "standard weight," "extra strong," and "double extra strong" welded wrought-iron pipe, both black and galvanized. Pipe ordered under these specifications is intended for coiling, bending, flanging, and other special purposes. Butt-welded pipe is not intended for flanging and is not recommended for close bending or coiling in sizes 1¼ in. and over. The purpose for which the pipe is intended should be stated in the order.

(*b*) *Galvanized Pipe.*—When pipe ordered under these specifications is to be galvanized, the tension, flattening, and bend tests shall be made on the base material before galvanizing; or the mechanical tests may be made on galvanized samples, in which case any flaking or cracking of the zinc coating shall not be considered a cause for rejection. The zinc coating shall be tested in accordance with Section 12. When specified, results of the mechanical tests on the base material shall be reported to the purchaser.

Material and Process

2. (*a*) The pipe shall be made from all pig-puddled or processed wrought iron[3] and shall be free from any admixture of iron scrap (Note) or steel.

NOTE.—The term iron scrap applies only to foreign or bought scrap and does not include local mill products which are free from foreign or bought scrap. Any local mill products used shall be the equal of or a higher grade than the material specified.

(*b*) Wrought-iron pipe is produced by furnace welding either by the butt-weld or the lap-weld process. Sizes ¼ to 1 in. inclusive are butt-welded; sizes 1¼ to 4 in. inclusive are either butt-welded or lap-welded; sizes 4½ to 12 in. nominal and larger up to 14 in. in outside diameter inclusive are lap-welded. Sizes 16 in. in outside diameter and larger are produced in accordance with the Specification for Electric-Fusion (Arc)-Welded Wrought Iron Plate Pipe (ASTM Designation A 419).

[3] Wrought iron is defined as follows in the Definitions of Terms Relating to Wrought Iron (ASTM Designation: A 81):

Wrought Iron.—A ferrous material, aggregated from a solidifying mass of pasty particles of highly refined metallic iron with which, without subsequent fusion, is incorporated a minutely and uniformly distributed quantity of slag.

TABLE 1.—HYDROSTATIC TEST PRESSURES FOR WELDED WROUGHT-IRON PIPE.

(Pressures Expressed in Pounds per Square Inch.)[a]

Size (Nominal Inside Diameter), in.	Standard Weight Pipe		Extra Strong Pipe		Double Extra Strong Pipe	
	Butt Welded	Lap Welded	Butt Welded	Lap Welded	Butt Welded	Lap Welded
¼ to 1, incl.	700	...	850	....	1000	...
1¼ to 3, incl.	1000	1000	1300	1500	1400	1800
3½ to 4, incl.	1200	1200	1700	1700	....	2000
4½ to 8, incl.	...	1200	...	1700	....	2800
10 to 12, incl.	...	1000	...	1600	...	....

[a] For pipe over 12 in. in size, up to 14 in. in outside diameter inclusive, the test pressures should be calculated by the formula $P = \frac{2St}{D}$, where: P = pressure in pounds per square inch, S = fiber stress = 60 per cent of the specified yield point, t = thickness of wall in inches, and D = outside diameter in inches.

Chemical Composition

3. The iron shall conform to the following requirement as to chemical composition:

Manganese, max, per cent	0.06

Check Analysis

4. An analysis may be made by the purchaser from a broken tension-test specimen representing each lot. Drillings for analysis shall be so taken as to represent the entire cross-section of the specimen. The chemical composition thus determined shall conform to the requirement specified in Section 3.

Tensile Properties

5. (*a*) The material shall conform to the following requirements as to tensile properties:

Tensile strength, min, psi	42 000
Yield point, min, psi	25 000
Elongation in 8 in., min, per cent:	
full section	12
strip test	9

(*b*) The yield point shall be determined by the drop of the beam, by the halt in the gage of the testing machine, by the use of dividers, or by other approved methods. The speed of the crosshead of the machine shall not exceed ¾ in. per min.

Hydrostatic Tests

6. Each length of pipe shall be tested at the mill to the hydrostatic pressures prescribed in Table I. Pipe 2 in. and larger shall be jarred near one end while under test pressure.

Fracture Tests

7. A section of pipe 6 in. in length shall be flattened until broken by repeated light blows of a hammer or by pressure; the fracture developed shall have a fibrous appearance.

Bending Properties

8. For pipe 2 in. and under in diameter, a sufficient length of coiling or bending pipe shall stand being bent cold through 90 deg, around a cylindrical mandrel the diameter of which is 12 times the nominal diameter of the pipe, without developing cracks at any portion and without opening the weld. Double extra-strong pipe over 1¼ in. in nominal size need not be subjected to the bend test.

Micrographic Examinations

9. In case of doubt as to the presence of steel, the purchaser may, at his own expense, make micrographic examination and chemical analysis to assist in determining whether the material conforms to the requirements specified in Sections 2 and 3.

Galvanized Pipe

10. (*a*) Galvanized pipe shall be coated with zinc inside and outside by the hot-dip process.

(*b*) The zinc used for the coating shall be any grade of zinc conforming to the Specifications for Slab Zinc (Spelter) (ASTM Designation: B 6).

Weight of Coating

11. The weight of zinc coating shall be not less than 2.0 oz per sq ft of total coated surface, as determined in the manner prescribed in Section 12. The weight of coating expressed in ounces per square foot shall be calculated by dividing the total weight of zinc, inside plus outside, by the total area, inside plus outside, of the surface coated.

Weight of Coating Test

12. The weight of zinc coating shall be determined by a stripping test made in accordance with the Methods of Test for Weight of Coating on Zinc-Coated (Galvanized) Iron or Steel Articles (ASTM Designation: A 90). The total zinc on each specimen shall be determined in a single stripping operation, and the average of the results from the two specimens from each pipe shall be the weight of zinc coating.

Test Specimens

13. (*a*) For pipe up to and including 2 in. in nominal size, tension test specimens shall be of the full section of the pipe. For pipe larger than 2 in. in nominal size, tension test specimens may be strips not less than ¾ in. in width, cut longitudinally from the pipe. The sides of such specimens shall be parallel and not flattened between gage marks.

(*b*) Test specimens for determination of weight of coating shall be cut approximately 4 in. in length from opposite ends of the lengths of pipe selected for testing.

(*c*) All specimens shall be tested at room temperature.

Number of Tests

14. (*a*) One of each of the tests specified in Sections 5, 7, and 8 shall be made on one length of pipe from each lot of 500 lengths or fraction thereof, of each size.

(*b*) Two test specimens for the determination of weight of coating shall be taken, one from each end of one length of galvanized pipe, selected at random from each lot of 500 lengths or fraction thereof of each size.

(*c*) Each length of pipe shall be subjected to the hydrostatic test specified in Section 6.

Retests

15. (*a*) If the results of the mechanical tests of any lot do not conform to the requirements specified in Sections 5, 7, and 8, retests of two additional pipes shall be made, each of which shall conform to the requirements specified.

(*b*) If the weight of coating of any lot does not conform to the requirements specified in Section 11, retests of two additional pipes from the same lot shall be made, each of which shall conform to the requirements specified.

Standard Weights

16. (*a*) The standard weights for pipe of various size (nominal inside diameter) are prescribed in Table II.

(*b*) Nipples shall be cut from pipe of the same weight and quality described in these specifications.

Permissible Variations in Weight and Diameter

17. (*a*) *Weight.*—The weight of the pipe shall not vary from that prescribed in Table II by more than ±5 per cent for standard weight and extra strong pipe nor more than ±10 per cent for double extra strong pipe.

(*b*) *Diameter.*—For pipe 1½ in. and under in nominal diameter, the outside diameter at any point shall not vary more than 1/64 in. over nor more than 1/32 in. under the standard specified. For pipe 2 in. and over in nominal diameter, the outside diameter shall not vary more than ±1 per cent from the standard specified.

(*c*) *Thickness.*—The minimum wall thickness at any point shall be not more than 12.5 per cent under the nominal wall thickness specified.

Lengths

18. Unless otherwise specified, pipe lengths shall be in accordance with the following regular practice:

(*a*) Standard weight pipe shall be in random lengths of 16 to 22 ft, but not more than 5 per cent of the total number of lengths may be "jointers," which are two pieces coupled together. When ordered with plain ends, 5 per cent may be in lengths of 12 to 16 ft.

(*b*) Extra strong and double extra strong pipe shall be in random lengths of 12 to 22 ft. Five per cent may be in lengths of 6 to 12 ft.

Workmanship

19. Unless otherwise specified, pipe shall conform to the following regular practice:

(*a*) *Ends.*—Each end of standard weight pipe shall be threaded. Extra strong and double extra strong pipe shall be furnished with plain ends.

(*b*) *Ends Beveled for Welding.*—When ends of pipe are ordered to be beveled for welding they shall be beveled to an angle of 30 deg +5, −0, measured at right angle to the axis of pipe except if otherwise specified.

TABLE II.—STANDARD WEIGHTS AND DIMENSIONS OF WELDED WROUGHT-IRON PIPE.[a]

Size (Nominal inside Diamter), in.	Outside Diameter, in.	Standard Weight Pipe			Extra-Strong Pipe		Double Extra-Strong Pipe	
		Number of Threads per Inch	Thickness, in.	Weight of Pipe per Linear Foot, Threaded and with Couplings, lb	Thickness, in.	Weight of Pipe per Linear Foot, Plain Ends, lb	Thickness, in.	Weight of Pipe per Linear Foot, Plain Ends, lb
¼	0.540	18	0.090	0.42	0.122	0.54	.....	.....
⅜	0.675	18	0.093	0.57	0.129	0.74	.....	.....
½	0.840	14	0.111	0.85	0.151	1.09	0.307	1.71
¾	1.050	14	0.115	1.13	0.157	1.47	0.318	2.44
1	1.315	11½	0.136	1.68	0.183	2.17	0.369	3.66
1¼	1.660	11½	0.143	2.28	0.195	3.00	0.393	5.21
1½	1.900	11½	0.148	2.73	0.204	3.63	0.411	6.41
2	2.375	11½	0.158	3.68	0.223	5.02	0.447	9.03
2½	2.875	8	0.208	5.82	0.282	7.66	0.567	13.70
3	3.500	8	0.221	7.62	0.306	10.25	0.615	18.58
3½	4.000	8	0.231	9.20	0.325	12.51	0.651	22.85
4	4.500	8	0.242	10.89	0.344	14.98	0.690	27.54
5	5.563	8	0.263	14.81	0.383	20.78	0.768	38.55
6	6.625	8	0.286	19.18	0.441	28.57	0.884	53.16
*8	8.625	8	0.283	25.00	.....	.....	0.895	72.42
8	8.625	8	0.329	28.80	0.510	43.39	.....	.....
*10	10.750	8	0.284	32.00	.....	.....	.....	.....
*10	10.750	8	0.313	35.00	.....	.....	.....	.....
10	10.750	8	0.372	41.13	0.510	54.74	.....	.....
*12	12.750	8	0.336	45.00	.....	.....	.....	.....
12	12.750	8	0.383	50.70	0.510	65.42	.....	.....

[a] Weights prescribed in this table are for pipe 12 in. and under in nominal size; sizes larger than those shown in the table are measured by the outside diameter and will be furnished with plain ends unless otherwise specified; for such sizes it will be necessary to accept manufacturers' weights or calculate the weights on the basis of 1 cu in. of wrought iron weighing 0.27777 lb.

* Unless specifically stated on the order, the lighter weights will not be furnished.

(*c*) *Threads.*—The threads on the pipe shall be produced in conformity with the gaging practice of the American Standard for Pipe Threads,[7] and cut so as to assure a leak-proof joint when pipe with a power tight coupling is tested at the mill to the specified internal hydrostatic pressure.

(*d*) *Couplings.*—Each length of threaded pipe is to be provided with one coupling, which shall be tapped in accordance with the gaging practice of the American Standard for Pipe Threads.[7] Straight tapped couplings are furnished on pipe up to 2 in. in size; and taper tapped couplings on pipe 2½ in. and larger in size. Couplings shall be of wrought iron and they shall be marked with the manufacturer's name or brand.

[7] A complete description of the American Standard Pipe Threads applicable to pipe, valves, and fittings is contained in the American Standard for Pipe Threads (ASA No.: B2.1—1945); also "Screw-Thread Standards for Federal Services, 1942," National Bureau of Standards *Handbook H 28* January, 1942, the pertinent data in both sources being identical.

Finish

20. The finished pipe shall be reasonably straight and free from injurious defects. All burrs at the ends of the pipe shall be removed. Ordinary liquor marks incident to the manufacture of welded material will not be considered cause for rejection.

Marking

21. (*a*) Each length of pipe shall be legibly marked either by hot rolling, or by die stamping, or by stenciling, to show the name or the trade-mark of the manufacturer.

(*b*) The words WROUGHT IRON, the size and class of pipe, its length, the hydrostatic test pressure, and ASTM A-72 is to be stenciled on those sizes of pipe large enough to take this information.

(*c*) Smaller sizes of pipe that are bundled, in addition to the marking specified in Paragraph (*a*), shall show the manufacturer's name, the material, and the total footage of pipe on a tag securely attached to each bundle.

Inspection

22. The inspector representing the purchaser shall have free entry, at all times while work on the contract of the purchaser is being performed, to all parts of the manufacturer's works which concern the manufacture of the material ordered. The manufacturer shall afford the inspector, without charge, all reasonable facilities to satisfy him that the material is being furnished in accordance with these specifications. All tests (except check analysis) and inspection shall be made at the place of manufacture prior to shipment, unless otherwise specified, and shall be so conducted as not to interfere unnecessarily with the operation of the works.

Certification

23. In lieu of inspection by the purchaser's representative, when agreed upon in writing by the purchaser and the supplier, a certification shall be made the basis of acceptance of the material. This shall consist of a copy of the manufacturer's test report, or a statement by the supplier, accompanied by a copy of test results, that the material has been sampled, tested, and inspected in accordance with the provisions of these specifications. Each certification shall be signed by an authorized agent of the manufacturer or the supplier.

Rejection

24. Each length of pipe that develops injurious defects during shop working or application operations shall be rejected, and the manufacturer shall be notified.

APPENDIX

A system of standard pipe sizes has been approved by the American Standards Association as American Standard for Wrought-Steel and Wrought-Iron Pipe (ASA No. B 36.10–1959) whose Table 3 (Dimensions and Weights of Welded Wrought-Iron Pipe) is reprinted below. This table is published here as information only. Copies of this American Standard are available from The American Society of Mechanical Engineers, 345 East 47th St., New York 17, N. Y.

TABLE III.—DIMENSIONS AND WEIGHTS OF WELDED WROUGHT-IRON PIPE.[a,b]

Nominal Pipe Size and Outside Diameter, in.	Wall Thickness, in.[c,d]	Plain End Weight, lb per ft	Identification			Nominal Pipe Size and Outside Diameter, in.	Wall Thickness, in.[c,d]	Plain End Weight, lb per ft	Identification		
			API Standard	Standard, X-Strong, XX-Strong	Schedule Number				API Standard	Standard, X-Strong, XX-Strong	Schedule Number
⅛ (0.405)	0.069	0.24	5L	STD	40	4 (4.500)	0.242	10.79	5L	STD	40
	0.096	0.31	5L	XS	80		0.344	14.98	5L	XS	80
¼ (0.540)	0.090	0.42	5L	STD	40		0.690	27.54	5L	XXS	
	0.124	0.54	5L	XS	80	5 (5.563)	0.263	14.61	5L	STD	40
⅜ (0.675)	0.093	0.57	5L	STD	40		0.383	20.78	5L	XS	80
	0.129	0.74	5L	XS	80		0.768	38.55	5L	XXS	
½ (0.840)	0.111	0.85	5L	STD	40	6 (6.625)	0.286	18.97	5L	STD	40
	0.151	1.09	5L	XS	80		0.441	28.57	5L	XS	80
	0.307	1.71	5L	XXS			0.884	53.16	5L	XXS	
¾ (1.050)	0.115	1.13	5L	STD	40	8 (8.625)	0.283	24.70	5L		30
	0.157	1.47	5L	XS	80		0.329	28.55	5L		40
	0.318	2.44	5L	XXS			0.511	43.39	5L	XS	80
							0.895	72.42	5L	XXS	
1 (1.315)	0.136	1.68	5L	STD	40	10 (10.750)	0.284	31.20	5L		
	0.183	2.17	5L	XS	80		0.313	34.24	5L		30
	0.369	3.66	5L	XXS			0.372	40.48	5L		40
							0.510	54.74	5L	XS	60
1¼ (1.660)	0.143	2.27	5L	STD	40	12 (12.750)	0.336	43.77	5L		
	0.196	3.00	5L	XS	80		0.383	49.56	5L		30
	0.393	5.21	5L	XXS			0.510	65.42	5L	XS	
1½ (1.900)	0.148	2.72	5L	STD	40	14 (14.000)	0.383	54.57	5L	STD	30
	0.204	3.63	5L	XS	80		0.510	72.09	5L	XS	
	0.411	6.41	5L	XXS		16 (16.000)	0.383	62.58	5L	STD	30
2 (2.375)	0.157	3.65	5L	STD	40		0.510	82.77	5L	XS	40
	0.223	5.02	5L	XS	80	18 (18.000)	0.383	70.59	5L	STD	
	0.447	9.03	5L	XXS			0.510	93.45	5L	XS	
2½ (2.875)	0.207	5.79	5L	STD	40	20 (20.000)	0.383	78.60	5L	STD	20
	0.282	7.66	5L	XS	80		0.510	104.13	5L	XS	30
	0.567	13.70	5L	XXS		24 (24.000)	0.383	94.62	5L	STD	20
3 (3.500)	0.221	7.58	5L	STD	40		0.510	125.49	5L	XS	
	0.306	10.25	5L	XS	80						
	0.615	18.58	5L	XXS							
3½ (4.000)	0.231	9.10	5L	STD	40						
	0.325	12.51	5L	XS	80						
	0.651	22.85		XXS							

[a] The manufacture of pipe, in the nominal sizes of ⅛ to 12 in. inclusive, proceeds on the basis of a standardized outside diameter and the standardized weight per foot for each size of pipe. The wall thicknesses and the internal diameters, of this range of pipe sizes, are calculated values.

[b] The manufacture of pipe, in the nominal sizes of 14 in. in outside diameter and larger, proceeds on the basis of an outside diameter corresponding to the nominal size, and on the basis of a selected wall thickness, usually expressed in fractional parts of an inch. The weight per foot of this pipe is a calculated value.

[c] For tolerances on wall thicknesses see appropriate material specifications.

[d] The thicknesses of all of the sizes shown in this table are slightly greater than those of corresponding sizes for steel pipe, to compensate for the difference in weights per cubic foot of wrought-steel and wrought-iron.

SPECIFICATION FOR SEAMLESS CARBON STEEL AND OPEN HEARTH IRON BOILER TUBES

SA-83

(IDENTICAL WITH ASTM SPECIFICATION A 83-61T EXCEPT FOR EDITORIAL CORRECTIONS)

Scope

1. (*a*) This specification covers seamless carbon-steel and open-hearth iron boiler tubes and boiler flues, including safe ends, arch and stay tubes, and seamless superheater and small boiler tubes.

(*b*) This specification covers tubes ½ to 6 in., inclusive, in outside diameter and 0.035 to 0.320 in., inclusive, in minimum wall thickness.

(*c*) The purchaser shall specify in the order the outside diameter, minimum wall thickness, and grade desired. The inside diameter shall not be specified.

NOTE.—Tubing smaller in outside diameter and having a thinner wall than indicated in this specification is available. These smaller sizes may require different mechanical and manipulating tests which should be a matter of agreement between the manufacturer and the purchaser.

General Requirements

2. Material furnished under this specification shall conform to the applicable requirements of the current edition of the Specification for General Requirements for Carbon, Ferritic Alloy, and Austenitic Alloy Steel Tubes (ASTM Designation: A 450), unless otherwise provided herein.

Process

3. The steel shall be made by one or more of the following processes: open hearth, basic oxygen, or electric furnace. The open-hearth iron shall be made by the open-hearth process.

Manufacture

4. Tubes shall be made by the seamless process and shall be either hot-finished or cold-drawn, as specified.

Heat Treatment

5. Cold-drawn tubes shall be annealed "dead soft" after the final pass. Hot-finished tubes need not be annealed unless specified by the purchaser.

Chemical Composition

6. The steel or iron shall conform to the requirements as to chemical composition prescribed in Table I.

Check Analysis

7. (*a*) An analysis of two tubes from each lot of 250 tubes or fraction thereof, and from each lot of 2000 ft or fraction thereof, of safe-end material may be made by the purchaser. The chemical composition thus determined shall conform to the requirements specified.

(*b*) If the analysis of either tube does not conform to the requirements specified, an analysis of two additional tubes from the same lot shall be made, each of which shall conform to the requirements specified.

Crush Test

8. When required by the purchaser, crushing tests shall be made on sections of tube 2½ in. in length which shall stand crushing longitudinally, without cracking or splitting, as shown in the following table. For tubing less than 1 in. in outside diameter, the length of the specimen shall be 2½ times the outside diameter of the tube. Slight surface checks shall not be cause for rejection.

Wall Thickness of Tubes, in.	Height of Crushed Section, in.
	Grades A and B Tubes
0.135 and under	¾, or until outside folds are in contact
Over 0.135	1¼

Mechanical Tests Required

9. (*a*) *Flattening Test.*—One flattening test shall be made on specimens from each of two tubes from each lot of 250 tubes or fraction thereof, and from each

TABLE I.—CHEMICAL REQUIREMENTS.

	Grade A Low-Carbon Steel	Grade B Open-Hearth Iron	Alternate Grade B Open-Hearth Iron[b]
Carbon, per cent	0.06 to 0.18	0.08 max	0.05 max
Manganese, per cent	0.27 to 0.63	0.08 max	0.35 max
Phosphorus, max, per cent	0.048	0.020	0.020
Sulfur, max, per cent	0.058	0.045	0.045
Molybdenum, per cent	...	...	[c]
Copper, per cent	[a]	...	[c]

[a] When grade A tubes are specified with copper content, the copper range shall be 0.20 to 0.35 per cent on ladle analysis and 0.18 to 0.35 per cent on check analysis.

[b] If desired, alternate grade B (open-hearth iron) may be specified conforming to the chemical requirements given above. This alternate grade B shall meet all the tests and other requirements now specified for grade B.

[c] Alternate grade B may be specified as shown, or with a minimum copper content of 0.20 per cent, or with a molybdenum content of 0.05 to 0.15 per cent and a minimum copper content of 0.40 per cent.

2000 ft or fraction thereof of safe-end material.

(*b*) *Flange Test.*—For tubes having a wall thickness (actual mean wall) less than 10 per cent of the outside diameter, and provided the thickness does not exceed 0.200 in., one test shall be made on specimens from each of two tubes from each lot of 250 tubes or fraction thereof, and from each 2000 ft or fraction thereof of safe-end material. For tubes other than specified in Section 1(*b*), the flange test shall not be required.

(*c*) *Crush Test.*—When required by the purchaser, one crush test shall be made on specimens from each of two tubes from each lot of 250 tubes or fraction thereof, and from each 2000 ft of fraction thereof of safe-end material.

(*d*) *Hydrostatic Test.*—Each tube shall be subjected to the hydrostatic pressure test.

Forming Operations

10. Tubes when inserted in the boiler shall stand expanding and bending without showing cracks or flaws. Superheater tubes when properly manipulated shall stand all forging, welding, and bending operations necessary for application without developing defects.

Finish

11. Finished tubes shall be reasonably straight and have smooth ends free from burrs. They shall be free from injurious defects and shall have a workmanlike finish.

Marking

12. In addition to the marking prescribed in Specification A 450 the marking shall include whether the tube is made of steel or open-hearth iron, and whether it is hot-finished or cold-drawn.

SPECIFICATION FOR STAYBOLT WROUGHT IRON, SOLID

SA-84

(IDENTICAL WITH ASTM SPECIFICATION A 84-60T)

Scope

1. These specifications cover wrought iron for solid staybolts, round bars only.

Manufacture

2. The bars shall be rolled from a slab pile or box pile made from all pig-puddled, knobbled charcoal, or processed wrought iron.[4] The original muck bars shall be piled, rolled, repiled, and rerolled. The component parts of the slab pile or box pile shall be free from any admixture of iron scrap or steel.

Definitions of Terms

3. (*a*) *Slab Pile.*—A slab pile is a pile built up wholly of flat bars of iron, all bars running the full length of the pile.

(*b*) *Box Pile.*—In manufacturing wrought-iron bars, a box pile is a pile, the outside of which is formed of flat bars and the interior of a number of small bars, all bars running the full length of the pile.

Chemical Composition

4. The iron shall conform to the following requirement as to chemical composition:

Manganese, max., per cent	0.06

Check Analysis

5. An analysis may be made by the purchaser from a broken tension test specimen representing each lot as specified in Section 10. Drillings for analysis shall be so taken as to represent the entire cross-section of the specimen The chemical composition thus determined shall conform to the requirement specified in Section 4.

[4] Wrought iron is defined as follows

Wrought Iron.—A ferrous material, aggregated from a solidifying mass of pasty particles of highly refined metallic iron with which, without subsequent fusion, is incorporated a minutely and uniformly distributed quantity of slag.

Tensile Properties

6. (*a*) The material shall conform to the following requirements as to tensile properties:

Tensile strength, psi	47 000 to 52 000[a]
Yield point, min., psi	0.60 tens. str.
Elongation in 8 in., min., per cent	30[b]
Reduction of area, min., per cent	48[a]

[a] See Paragraph (*c*).
[b] See Paragraph (*d*).

(*b*) The yield point shall be determined by the drop of the beam or halt in the gage of the testing machine. The speed of the crosshead of the machine until the yield point is reached shall not exceed $\frac{3}{4}$ in. per min. After passing the yield point, the speed of the crosshead shall not exceed 3 in. per min.

(*c*) For material over $1\frac{1}{2}$ sq. in. in cross-sectional area, a reduction of 250 psi. from the minimum tensile strength specified in Paragraph (*a*) and a reduction of 3 per cent from the reduction of area specified in Paragraph (*a*) will be permitted for each additional 1 sq. in., and a proportionate amount of reduction for fractional parts thereof; provided that the tensile strength shall not be less than 46,000 psi. and the reduction of area not less than 40 per cent.

(*d*) For material $\frac{7}{8}$ in. down to and including $\frac{1}{16}$ in. in diameter, the elongation shall be not less than 28 per cent. For material $\frac{5}{8}$ in. and under in diameter, the elongation shall be not less than 25 per cent.

Bending Properties

7. (*a*) *Cold-Bend Tests.*—The bend test specimen shall stand being bent cold through 180 deg. A second similar 180-deg bend shall be made on the same sample on a plane 90 deg to the plane of the first bend. The specimen shall withstand both bends without fracture on the outside of the bent portions.

(*b*) *Nick-Bend Tests.*—At the option of the purchaser, the following test shall be made: The test specimen, when nicked 25 per cent around, with a tool having a 60-deg. cutting edge, to a depth of not less than 8 nor more than 16 per cent of the diameter of the specimen and broken slowly, shall show clean fibers, free from crystallization.

(*c*) Bend tests may be made by pressure or by blows.

Etch Test

8. The cross-section of the test specimen shall be ground or polished, and etched[5] for a sufficient period to develop the structure. This test shall show the material to be free from steel and to have been rolled from a slab pile or box pile.

Test Specimens

9. All test specimens shall be of the full section of the material as rolled.

Number of Tests

10. (*a*) Bars of each size shall be sorted into lots of 100 each, except as specified in Paragraph (*b*). Two bars shall be selected at random from each lot or fraction thereof, and tested as specified in Sections 6 and 7, but only one of these bars shall be tested as specified in Section 8.

(*b*) When small lots of different sizes are to be tested, the bars shall be grouped into lots of 50 or fraction thereof, without regard to size. One bar representing each lot of 50 bars or fraction thereof shall be tested as specified in Sections 6, 7, and 8.

[5] A solution of two parts water, one part concentrated hydrochloric acid, and one part concentrated sulfuric acid is recommended for the etch test.

(*c*) If any of the specimens originally selected to represent a lot of material contains surface defects not visible before testing but visible after testing, or if a tension test specimen fails to conform to the requirements specified in Section 6 and breaks outside the middle third of the gage length, as indicated by scribe scratches marked on the specimen before testing, the individual specimen shall be rejected, and one retest from a different bar or bolt will be allowed.

Permissible Variations in Size

11. The bars shall be truly round within 0.01 in. The diameter shall be not less than 0.005 in. over nor more than 0.020 in. over the specified diameter.

Finish

12. The bars shall be smoothly rolled and free from slivers, depressions, crop ends, seams, and evidences of being burnt.

Marking

13. The bars shall be stamped or otherwise marked with the name or brand of the manufacturer.

Inspection

14. (*a*) The inspector representing the purchaser shall have free entry, at all times while work on the contract of the purchaser is being performed, to all parts of the manufacturer's works which concern the manufacture of the material ordered. The manufacturer shall afford the inspector, without charge, all reasonable facilities to satisfy him that the material is being furnished in accordance with these specifications. All tests (except check analysis) and inspection shall be made at the place of manufacture prior to shipment, unless otherwise specified, and shall be so conducted as not to interfere unnecessarily with the operation of the works.

(*b*) The purchaser may make the tests to govern the acceptance or rejection of the material in his own laboratory or elsewhere. Such tests, however, shall be made at the expense of the purchaser.

(*c*) In lieu of inspection by the purchaser's representative, when agreed upon in writing by the purchaser and the supplier, a certification shall be made the basis of acceptance of the material. This shall consist of manufacturer's test reports, or a statement by the supplier, accompanied by a copy of the test results, that the material has been sampled, tested, and inspected in accordance with the provisions of this specification. Each certification shall be signed by an authorized agent of the manufacturer or of the supplier.

Rejection

15. (*a*) If either of the test bars selected to represent a lot does not conform to the requirements specified, the lot will be rejected.

(*b*) Material which will not take a clean, sharp thread, with dies in fair condition, or which develops defects in forging or machining, will be rejected, and the manufacturer shall be notified.

(*c*) Unless other specified, any rejection based on tests made in accordance with Section 14 (*b*) shall be reported to the manufacturer within five working days from the receipt of samples by the purchaser.

Rehearing

16. Samples tested in accordance with Section 14 (*b*) that represent rejected material shall be preserved for two weeks from the date of the test report. In case of dissatisfaction with the results of the tests, the manufacturer may make claim for a rehearing within that time.

SPECIFICATION FOR FORGED OR ROLLED STEEL PIPE FLANGES, FORGED FITTINGS, AND VALVES AND PARTS FOR HIGH-TEMPERATURE SERVICE

SA-105

(IDENTICAL WITH ASTM SPECIFICATION A 105-61T)

Scope

1. (*a*) These specifications cover forged or rolled steel pipe flanges, forged fittings, and valves and parts for high-temperature service (Note). The term "forgings" used in these specifications shall be understood to cover one or all of the products mentioned above, either forged or rolled.

(*b*) Two grades of material are covered, designated grades I and II, respectively, and are classified in accordance with their mechanical properties as specified in Section 9 (*a*).

Process

2. The steel may be made by either or both of the following processes: open-hearth or electric-furnace.

Discard

3. A sufficient discard shall be made from each ingot to secure freedom from injurious piping and undue segregation.

Manufacturing Practice

4. (*a*) Material for forgings shall consist of ingots or blooms, billets, slabs, or bars either forged or rolled from an ingot, and cut to the required length by a suitable process.

(*b*) The material shall be forged by hammering, pressing, rolling, extruding, or upsetting and shall be brought as nearly as practicable to the finished shape and size by hot working and shall be so processed as to cause metal flow during the hot working operation in the direction most favorable for resisting the stresses encountered in service.

(*c*) When specified in the order, a sample forging may be sectioned and etched to show flow lines and the condition as regards internal imperfections.

TABLE I.—CHEMICAL REQUIREMENTS.

	Grade I	Grade II
Carbon, max, per cent	0.35	0.35
Manganese, max, per cent	0.90	0.90
Phosphorus, max, per cent	0.05	0.05
Silicon, max, per cent	[a]	[a]
Sulfur, max, per cent	0.05	0.05

[a] It may be necessary to add silicon to the composition for grade II and for the heavier thicknesses of grade I flanges in order to meet the required tensile properties. The silicon content shall not exceed 0.35 per cent.

In such cases, the question of acceptable and unacceptable character of metal flow shall be a subject for agreement between the manufacturer and the purchaser.

(*d*) When specified in the order, the manufacturer shall submit for approval of the purchaser a sketch showing the shape of the rough forging before machining.

(*e*) Forgings intended for application to pressure vessels may be repair welded provided the welding is performed in accordance with all the requirements of Part UF of Section VIII of the ASME Boiler and Pressure Vessel Code, and the repair welding is approved by the purchaser.

Heat Treatment

5. (*a*) Grades I and II flanges, forged fittings, valves and parts shall be heat treated. Heat treatment may consist of annealing or normalizing.

(*b*) *Annealing.*—The procedure for annealing shall consist in allowing the forgings, immediately after forging or rolling, to cool to a temperature below the critical range, under suitable conditions to prevent injuries by too rapid cooling. They shall then be uniformly reheated to the proper temperature to refine the grain (a group thus reheated being known as an "annealing charge") and allowed to cool uniformly in the furnace.

(*c*) *Normalizing.*—The procedure for normalizing shall consist in allowing the forgings, immediately after forging or rolling, to cool to a temperature below the critical range, under suitable conditions to prevent injuries by too rapid cooling. They shall then be uniformly reheated to the proper temperature to refine the grain (a group thus reheated being known as a "normalizing charge") and allowed to cool in still air.

TABLE II.—TENSILE REQUIREMENTS.

	Grade I	Grade II
Tensile strength, min, psi	60 000	70 000
Yield point, min, psi	30 000	36 000
Elongation in 2 in., min, per cent	25	22
Reduction of area, min, per cent	38	30

(*d*) No forgings that have been quenched in any liquid medium shall be offered under these specifications, except by agreement between the manufacturer and the purchaser.

Chemical Composition

6. The steel shall conform to the requirements as to chemical composition prescribed in Table I.

Ladle Analysis

7. An analysis of each heat of steel shall be made by the manufacturer to determine the percentages of the elements specified in Section 6.

Check Analysis

8. An analysis may be made by the purchaser from one forging representing each heat. Samples for analysis shall be taken not less than ¼ in. below the surface or from tension test specimens. The chemical composition thus determined shall conform to the requirements specified in Section 6, except that the phosphorus and sulfur content may each be 0.055 per cent.

Tensile Properties

9. (*a*) The material shall conform to the requirements as to tensile properties prescribed in Table II.

(*b*) The yield point shall be determined by the drop of the beam or halt in the gage of the testing machine, or by the use of dividers, at a crosshead speed not to exceed ½ in. per min. The tensile strength shall be determined at a speed of head not to exceed 1½ in. per min.

Test Specimens

10. (*a*) The tension test specimens taken from the forgings, billets, or bars shall be machined to the form and dimensions of the standard 2-in. gage length tension test specimen shown in Fig. 6 of the Methods and Definitions for Mechanical Testing of Steel Products (ASTM Designation: A 370), except as specified in Paragraph (*b*).

(*b*) In the case of small sections which will not permit of taking the standard test specimen specified in Paragraph (*a*), the tension test specimen shall be as large as feasible and its dimensions shall be proportional to those shown in Fig. 6 of Methods A 370. The gage length for measuring elongation shall be four times the diameter of the specimen.[4]

(*c*) For the purpose of making tension tests, the forging manufacturer shall supply suitable test specimens from the flange or, at his option, furnish test blanks prepared from the billets or forging bar entering into the finished product, provided such test blank has undergone approximately the same working and heat treatment as the finished product.

Number of Tests

11. (*a*) One tension test shall be made from each annealing or normalizing charge. If more than one heat is represented in an annealing or normalizing charge, a test shall be made from each heat.

(*b*) If any test specimen shows defective machining or develops flaws, it may be discarded and another specimen substituted.

Retests

12. If any of the results of the mechanical tests of any test lot do not conform to the requirements specified, the manufacturer may retest such lots but not more than twice, except with the approval of the purchaser on the basis of satisfactory metallurgical evidence that the cause of the failure is curable and the quality of the material is satisfactory. Retests shall be made as specified in Section 11 (*a*).

Workmanship

13. The forgings shall conform to the sizes and shapes specified by the purchaser

Finish

14. The forgings shall be free from injurious defects and shall have a workmanlike finish.

Marking

15. Identification marks consisting of the manufacturer's symbol or name, designation of service rating, the designation A 105—I or A 105—II to indicate the grade of material, and the size shall be legibly stamped on each forging in accordance with the Standard Marking Sysetm for Valves, Fittings, Flanges, and Unions (SP-25-1960) of the Manufacturer's Standardization Society of the Valve and Fittings Industry, and in such position as not to injure the usefulness of the forging.

Inspection

16. (*a*) The inspector representing the purchaser shall have free entry, at all times while work on the contract of the purchaser is being performed, to all parts of the manufacturer's works that concern the manufacture of the material ordered. The manufacturer shall afford the inspector, without charge, all reasonable facilities to satisfy him that the material is being furnished in accordance with these specifications. All tests (except check analysis) and inspection shall be made at the place of manufacture prior to shipment, unless otherwise specified, and shall be so conducted as not to interfere unnecessarily with the operation of the works.

(*b*) *Certification.*—Unless otherwise specified in the order, a certification that the material conforms to the requirements of these specifications shall be the basis of acceptance of the material.

Rejection

17. (*a*) Unless otherwise specified, any rejection based on tests made in accordance with Section 8 shall be reported to the manufacturer within twelve working days from the receipt of samples by the purchaser.

(*b*) Material that shows injurious defects while being finished shall be rejected.

Rehearing

18. Samples tested in accordance with Section 8 that represent rejected material shall be preserved for two weeks from the date of the test report. In case of dissatisfaction with the results of the tests, the manufacturer may make claim for a rehearing within that time.

[4] These requirements are in accordance with the provisions of Section 8 of the Methods of Tension Testing of Metallic Materials (ASTM Designation: E 8).

NOTE.—Reference may be made to the dimensional standards for hydraulic pressure ratings and corresponding temperatures formulated by the Sectional Committee on Standardization of Pipe Flanges and Fittings, under the procedure of the American Standards Association, ASA Project B16 and more specifically to the American Standard for Steel Pipe Flanges and Flanged Fittings (ASA No.: B16.5-1961). Copies of the American Standard are obtainable from The American Society of Mechanical Engineers, 345 East 47th St., New York 17, N. Y.

EXPLANATORY NOTE

SPECIFICATION FOR SEAMLESS CARBON-STEEL PIPE FOR HIGH-TEMPERATURE SERVICE

SA-106

(IDENTICAL WITH ASTM SPECIFICATION A 106-61T)

Scope

1. (*a*) These specifications cover seamless carbon-steel pipe for high-temperature service (see Explanatory Note 1). Pipe ordered under these specifications is nominal (average) wall and shall be suitable for bending, flanging, and similar forming operations (see Explanatory Note 2).

(*b*) Supplementary requirements (Paragraphs S1 to S6) of an optional nature are provided for seamless pipe intended for use in central stations having steam service pressures of 400 psi and over and high temperatures or other applications where a superior grade of pipe is required. These supplementary requirements call for additional tests to be made at the expense of the purchaser, and when desired shall be so stated in the order.

Process

2. (*a*) The steel shall be killed steel made by either or both of the following processes: open-hearth or electric furnace.

(*b*) Pipe 1½ in. and under in nominal diameter may be either hot finished or cold drawn and annealed.

(*c*) Unless otherwise specified, pipe 2 in. and over in nominal diameter shall be furnished hot finished. When agreed upon between the manufacturer and the purchaser, cold-drawn and annealed pipe may be furnished.

Chemical Composition

3. The steel shall conform to the chemical requirements prescribed in Table I.

Ladle Analysis

4. An analysis of each heat of steel shall be made by the steel manufacturer to determine the percentages of the elements specified in Section 3. The chemical composition thus determined, or that determined from a check analysis made by the manufacturer, if the latter has not manufactured the steel, shall be reported to the purchaser or his representative, and shall conform to the requirements specified in Section 3.

Check Analysis

5. (*a*) At the request of the purchaser, analyses of two pipes from each lot[3] of 400 lengths or fraction thereof, of each size 2 in. up to, but not including, 6 in., and from each lot[3] of 200 lengths or fraction thereof of each size 6 in. and over, shall be made by the manufacturer from the finished pipe. Samples for chemical analysis, except for spectrochemical analysis, shall be taken in accordance with the Method of Sampling Steel, Cast Iron, Open-Hearth Iron, and Wrought Iron for Determination of Chemical Composition (ASTM Designation: E 59). The chemical composition thus determined shall conform to the requirements specified in Section 3.

(*b*) If the analysis of one of the tests specified in Paragraph (*a*) does not conform to the requirements specified in Section 3, analyses shall be made on additional pipes of double the original number from the same lot, each of which shall conform to requirements specified.

Tensile Properties

6. (*a*) The material shall conform to the requirements as to tensile properties prescribed in Table II.

(*b*) The yield point shall be determined by the drop of the beam, by the halt in the gage of the testing machine, by the use of dividers, or by other approved methods. When a definite yield point is not exhibited, the yield strength corresponding to a permanent offset of 0.2 per cent of the gage length of the specimen, or to a total extension of 0.5 per cent of the gage length under load shall be determined.

Bending Properties

7. For pipe 2 in. and under in nominal diameter, a sufficient length of pipe shall stand being bent cold through 90 deg around a cylindrical mandrel, the diameter of which is twelve times the nominal diameter of the pipe, without developing cracks. When ordered for close coiling

TABLE I.—CHEMICAL REQUIREMENTS

	Grade A	Grade B	Grade C[a]
Carbon, max, per cent	0.25	0.30	0.35
Manganese, per cent	0.27 to 0.93	0.29 to 1.06	0.29 to 1.06
Phosphorus, max, per cent	0.048	0.048	0.048
Sulfur, max, per cent	0.058	0.058	0.058
Silicon, min, per cent	0.10	0.10	0.10

[a] Grade C is a special product supplied only on agreement between the manufacturer and the purchaser.

[3] A lot shall consist of the number of lengths specified in Sections 5 and 11, of the same size and wall thickness from any one heat of steel.

(see Explanatory Note 2), the pipe shall stand being bent cold through 180 deg around a cylindrical mandrel, the diameter of which is eight times the nominal diameter of the pipe, without failure.

Flattening Tests

8. For pipe over 2 in. in nominal diameter a section of pipe not less than 2½ in. in length shall be flattened cold between parallel plates until the opposite walls of the pipe meet. No cracks or breaks in the metal shall occur until the distance between the plates is less than that calculated for the value of "*H*" by the following formula:

$$H = \frac{(1 + e)t}{e + t/D}$$

where:

H = distance between flattening plates in inches,[5]
e = deformation per unit length (constant for a given grade of steel, 0.08 for grade A and 0.07 for grades B and C),
t = nominal wall thickness of pipe in inches, and
D = actual outside diameter of pipe in inches.

Evidence of laminations or burnt material shall not develop during the entire flattening process.

Hydrostatic Test

9. (*a*) Unless otherwise agreed upon between the manufacturer and the purchaser, each length of pipe shall be tested by the manufacturer to a hydrostatic pressure which will produce in the pipe wall a stress of 60 per cent of the minimum specified yield point at room temperature. This pressure shall be determined by the following formula:

$$P = \frac{2St}{D}$$

where:

P = minimum hydrostatic test pressure in pounds per square inch,
S = 0.60 times the minimum specified yield point at room temperature in pounds per square inch,
t = nominal wall thickness in inches, and
D = outside diameter in inches.

(*b*) The maximum hydrostatic test pressure shall not exceed 2500 psi for nominal sizes 3 in. and under, or 2800 psi for all nominal sizes over 3 in. The hydrostatic pressure shall be maintained for not less than 5 sec.

NOTE.—When requested by the purchaser and so stated in the order, pipe in sizes 14 in. in nominal diameter and smaller shall be tested to one and one half times the specified working pressure, provided the fiber stress corresponding to those test pressures does not exceed 60 per cent the minimum specified yield point of the material, as determined by the above formula. When one and one-half times the working pressure exceeds 2800 psi, the hydrostatic test pressure shall be a matter of agreement between the purchaser and the manufacturer.

[5] The "*H*" values have been calculated for sizes from 2½ to 24 in., incl, and are shown in Table V (See Appendix I) of these specifications.

TABLE II.—TENSILE REQUIREMENTS.

	Grade A (See Explanatory Note 2)		Grade B		Grade C	
Tensile strength, min, psi	48 000		60 000		70 000	
Yield point, min, psi	30 000		35 000		40 000	
	Longitudinal	Transverse	Longitudinal	Transverse	Longitudinal	Transverse
Elongation in 2 in., min, per cent:						
Basic minimum elongation for walls 5/16 in. and over in thickness, strip tests, and for all small sizes tested in full section	35	25	30	16.5	30	16.5
When standard round 2-in. gage length test specimen is used	28	20	22	12	20	12
For strip tests, the width of the gage section shall be 1½ in. and a deduction for each 1/32-in. decrease in wall thickness below 5/16 in. from the basic minimum elongation of the following percentage	1.75[a]	1.25[a]	1.50[a]	1.00[a]	1.50[a]	1.00[a]

[a] The following table gives the computed minimum values:

Wall Thickness, in.	Elongation in 2 in. min, per cent			
	Grade A		Grades B and C	
	Longitudinal	Transverse	Longitudinal	Transverse
5/16 (0.312)	35.00	25.00	30.00	16.50
9/32 (0.281)	33.25	23.75	28.50	15.50
1/4 (0.250)	31.50	22.50	27.00	14.50
7/32 (0.219)	29.75	...	25.50	...
3/16 (0.188)	28.00	...	24.00	...
5/32 (0.156)	26.25	...	22.50	...
1/8 (0.125)	24.50	...	21.00	...
3/32 (0.094)	22.75	...	19.50	...
1/16 (0.062)	21.00	...	18.00	...

NOTE.—The above table gives the computed minimum elongation values for each 1/32-in. decrease in wall thickness. Where the wall thickness lies between two values shown above, the minimum elongation value is determined by the following formula:

Grade	Direction of Test	Formula
A	Longitudinal	$E = 56t + 17.50$
A	Transverse	$E = 40t + 12.50$
B and C	Longitudinal	$E = 48t + 15.00$
B and C	Transverse	$E = 32t + 6.50$

where:
E = elongation in 2 in. in per cent, and
t = actual thickness of specimen, in inches.

Test Specimens and Methods of Testing

10. (*a*) The test specimens and the tests required by these specifications shall conform to those described in the Methods and Definitions for the Mechanical Testing of Steel Products (ASTM Designation: A 370).

(*b*) Specimens cut either longitudinally or transversely shall be acceptable for the tension test.

(*c*) Test specimens for the bend and flattening tests shall consist of sections cut from a pipe. Specimens for flattening tests shall be smooth on the ends and free from burrs, except when made on crop ends.

(*d*) All routine check tests shall be made at room temperature.

Number of Tests

11. (*a*) One of either of the tests specified in Section 6 shall be made on one length of pipe from each lot[3] of 400 lengths or fraction thereof of each size under 6 in., and from each lot[3] of 200 lengths or fraction thereof of each size 6 in. and over.

(*b*) For pipe 2 in. and under in nominal diameter, the bend test specified in Section 7 shall be made on one pipe from each lot[3] of 400 lengths or fraction thereof of each size.

(*c*) The flattening test specified in Section 8 shall be made on one length of pipe from each lot[3] of 400 lengths or fraction thereof of each size over 2 in., up to but not including 6 in., and from each lot[3] of 200 lengths or fraction thereof, of each size 6 in. and over.

(*d*) Each length of pipe shall be subjected to the hydrostatic test specified in Section 9.

(*e*) If any test specimen shows defective machining or develops flaws, it may be discarded and another specimen substituted.

(*f*) If the percentage of elongation of any tension test specimen is less than that prescribed in Table II and any part of the fracture is more than ¾ in. from the center of the gage length of a 2-in. specimen as indicated by scribe scratches marked on the specimen before testing, a retest shall be allowed. If a specimen breaks in an inside or outside surface flaw, a retest shall be allowed.

Retests

12. (*a*) If the results of any mechanical tests of any lot[3] do not conform to the requirements specified in Sections 6, 7, and 8, retests shall be made on additional pipes of double the original number from the same lot, each of which shall conform to the requirements specified.

(*b*) Should a crop end of a finished pipe fail in the flattening test, one retest may be made from the failed end. Pipe may be normalized either before or after the first test, but pipe shall be subjected to only two normalizing treatments.

TABLE III.—DIMENSIONS OF WELDED AND SEAMLESS STEEL PIPE.[a]

NOTE 1.—Thicknesses shown in boldface type in Schedules 30 and 40 are identical with thicknesses for "standard-weight" pipe in former lists; those in Schedules 60 and 80 are identical with thicknesses for "extra-strong" pipe in former lists.

NOTE 2.—The decimal thicknesses for the respective pipe sizes represent their nominal or average wall dimensions.

NOTE 3.—Some of the larger, heavier wall sections are beyond the capabilities of seamless mill production and must be obtained from turned and bored billets or other sources.

Nominal Pipe Size, in.	Outside Diameter, in.	Nominal Wall Thickness, in.									
		Schedule Number									
		10	20	30	40	60	80	100	120	140	160
1/8	0.405	...	...	...	**0.068**	...	**0.095**	...	...	...	...
1/4	0.540	...	...	...	**0.088**	...	**0.119**	...	...	...	...
3/8	0.675	...	...	...	**0.091**	...	**0.126**	...	...	...	...
1/2	0.840	...	...	...	**0.109**	...	**0.147**	...	...	...	0.187
3/4	1.050	...	...	...	**0.113**	...	**0.154**	...	...	...	0.218
1	1.315	...	...	...	**0.133**	...	**0.179**	...	...	...	0.250
1¼	1.660	...	...	...	**0.140**	...	**0.191**	...	...	...	0.250
1½	1.900	...	...	...	**0.145**	...	**0.200**	...	...	...	0.281
2	2.375	...	...	...	**0.154**	...	**0.218**	...	...	...	0.343
2½	2.875	...	...	...	**0.203**	...	**0.276**	...	...	...	0.375
3	3.5	...	...	...	**0.216**	...	**0.300**	...	...	...	0.438
3½	4.0	...	...	...	**0.226**	...	**0.318**	...	...	...	...
4	4.5	...	...	...	**0.237**	...	**0.337**	...	0.438	...	0.531
5	5.563	...	...	...	**0.258**	...	**0.375**	...	0.500	...	0.625
6	6.625	...	...	...	**0.280**	...	**0.432**	...	0.562	...	0.718
8	8.625	...	0.250	**0.277**	**0.322**	0.406	**0.500**	0.593	0.718	0.812	0.906
10	10.75	...	0.250	**0.307**	**0.365**	**0.500**	0.593	0.718	0.843	1.000	1.125
12	12.75	...	0.250	**0.330**	0.406	0.562	0.687	0.843	1.000	1.125	1.312
14 OD	14.0	0.250	0.312	0.375	0.438	0.593	0.750	0.937	1.093	1.250	1.406
16 OD	16.0	0.250	0.312	0.375	0.500	0.656	0.843	1.031	1.218	1.438	1.593
18 OD	18.0	0.250	0.312	0.438	0.562	0.750	0.937	1.156	1.375	1.562	1.781
20 OD	20.0	0.250	0.375	0.500	0.593	0.812	1.031	1.281	1.500	1.750	1.968
24 OD	24.0	0.250	0.375	0.562	0.687	0.968	1.218	1.531	1.812	2.062	2.343

[a] See Explanatory Note 3.

Dimensions

13. (*a*) The nominal wall thicknesses for pipe of various diameters are prescribed in Table III.

(*b*) Nipples shall be cut from pipe of the same dimensions and quality described in these specifications.

Permissible Variations in Weight and Dimensions

14. (*a*) *Weight.*—The weight of any length of pipe shall not vary more than 6.5 per cent over and 3.5 per cent under that specified for pipe of schedules 10 to 120, incl, nor more than 10 per cent over and 3.5 per cent under that specified for pipe heavier than schedule 120 (Note). Unless otherwise agreed upon between the manufacturer and the purchaser, pipe in sizes 4 in. and smaller may be weighed in convenient lots; pipe in sizes larger than 4 in. shall be weighed separately.

NOTE.—For weights corresponding to the thicknesses prescribed in Table III, also for the specifications for pipe approved by the American Standards Association, reference should be made to the American Standard for Wrought Steel and Wrought Iron Pipe (ASA No.: B 36.10—1959). Copies of this American Standard are available from The American Society of Mechanical Engineers, 345 East 47th St., New York 17, N. Y.

(*b*) *Diameter.*—Variations in outside diameter shall not exceed those specified in Table IV.

(*c*) *Thickness.*—The minimum wall thickness at any point shall not be more

than 12.5 per cent under the nominal wall thickness specified.

NOTE.—The minimum wall thickness on inspection is shown in Table VI (Appendix II).

Lengths

15. Pipe lengths shall be in accordance with the following regular practice:

(*a*) The lengths required shall be specified in the order, and

(*b*) No jointers are permitted unless otherwise specified.

(*c*) If definite lengths are not required, pipe may be ordered in single random lengths of 16 to 22 ft with 5 per cent

TABLE IV.—VARIATIONS IN OUTSIDE DIAMETER.

Nominal Pipe Size, in.	Permissible Variations in Outside Diameter, in.	
	Over	Under
⅛ to 1½, incl.	1/64 (0.015)	1/32 (0.031)
Over 1½ to 4, incl.	1/32 (0.031)	1/32 (0.031)
Over 4 to 8, incl.	1/16 (0.062)	1/32 (0.031)
Over 8 to 18, incl.	3/32 (0.093)	1/32 (0.031)
Over 18 to 24, incl.	1/8 (0.125)	1/32 (0.031)

12 to 16 ft, or in double random lengths with a minimum average of 35 ft and a minimum length of 22 ft with 5 per cent 16 to 22 ft.

Ends

16. Unless otherwise specified, pipe shall be furnished with plain ends. All burrs at the ends of the pipe shall be removed.

Finish

17. (*a*) The finished pipe shall be reasonably straight and free from injurious defects. At the discretion of the inspector representing the purchaser, finished pipe shall be subject to rejection if surface defects acceptable under Paragraph (*c*) are not scattered, but appear over a large area in excess of what is considered a workmanlike finish.

(*b*) *Depth of Injurious Defects.*—All defects shall be explored for depth. When the depth is in excess of 12½ per cent of the nominal wall thickness or encroaches on the minimum wall thickness such defects shall be considered injurious.

(*c*) *Machining or Grinding Defects Not Classified as Injurious.*—Surface defects not classified as injurious shall be treated as follows:

(*1*) Pipe showing scabs, seams, laps, tears, or slivers not deeper than 5 per cent of the nominal wall thickness need not have these defects removed. If deeper than 5 per cent, such defects shall be removed by machining or grinding.

(*2*) Mechanical marks or abrasions[6] and pits shall be acceptable without grinding or machining provided the depth does not exceed the limitations set forth in Paragraph (*b*) and if not deeper than 1/16 in. If such defects are deeper than 1/16 in. but not deeper than 12½ per cent of the nominal wall thickness, they shall be removed by grinding or machining to sound metal.

(*3*) When defects have been removed by grinding or machining, the outside diameter at the point of grinding or machining may be reduced by the amount so removed. Should it be impracticable to secure a direct measurement, the wall thickness at the point of grinding, or at a defect not required to be removed, shall be determined by deducting the amount removed in grinding or the depth of the defect, from the minimum measured wall thickness at the ends of the pipe, and the remainder shall not be less than 87.5 per cent of the nominal wall thickness.

(*4*) Machining or grinding shall follow the mill's inspection of the pipe as rolled and shall be followed by supplementary visual inspection.

(*d*) *Repair by Welding.*—Repair of injurious defects shall be permitted only subject to the approval of the purchaser. Welding of injurious defects in no case shall be permitted when the depth of defect exceeds 33⅓ per cent of the nominal pipe wall thickness or the length of repair exceeds 25 per cent of the nominal diameter of the pipe. Defects shall be thoroughly chipped or ground out before welding. Each length of repaired pipe shall be retested hydrostatically in accordance with Section 9.

Marking

18. (*a*) Each length of pipe manufactured in accordance with these specifications shall be legibly marked, either by stencilling, stamping, or rolling, with the manufacturer's private identifying mark, together with the designation A 106-A (or B or C, depending on the grade of steel used), the hydrostatic test pressure, and an additional S if the pipe conforms in any case to the supplementary requirements specified in Paragraphs S1 to S6. The length and schedule number of the pipe also shall be included. Marking shall begin approximately 12 in. from one end of each length. On pipe sizes larger than 4 in., the weight shall be given. On small diameter pipe which is bundled, the above information may be legibly stamped on a metal tag securely attached to each bundle. When pipe marked as specified in this section is rejected, the designation A 106 shall be canceled.

(*b*) When it is specified that certain requirements of these specifications are to be completed by the purchaser upon receipt of the material, the manufacturer shall indicate that all requirements of the specifications have not been completed by a letter X, Y, or Z immediately following the specification number. This letter may be removed after completion of all requirements in accordance with these specifications. An explanation of specification requirements to be completed is provided in Section 19(*b*).

Inspection

19. (*a*) The inspector representing the purchaser shall have free entry, at all times while work on the contract of the purchaser is being performed, to all parts of the manufacturer's works that concern the manufacture of the material ordered. The manufacturer shall afford the inspector, without charge, all reasonable facilities to satisfy him that the material is being furnished in accordance with these specifications. All tests and inspection shall be made at the place of manufacture prior to shipment and at the manufacturer's expense, unless otherwise specified, and shall be so conducted as not to interfere unnecessarily with the operation of the works.

(*b*) *Certification.*—The certificate or report accomplished by the manufacturer shall include a statement of explanation for the letter added to the specification number (see Section 18(*b*)), when all the requirements of these specifications have not been completed. The purchaser must certify that all requirements of the specifications have been completed before removal of the letter X, Y, or Z.

[6] Marks and abrasions are defined as cable marks, dinges, guide marks, roll marks, ball scratches, scores, die marks, etc.

Rejection

20. Each length of pipe that develops injurious defects during shop working or application operations will be rejected, and the manufacturer shall be notified. No rejections under these or any other specifications shall be marked as specified in Section 18 for sale under these specifications except where such pipe fails to comply with the weight requirements alone, in which case it may be sold under the weight specifications with which it does comply.

SUPPLEMENTARY REQUIREMENTS FOR SEAMLESS PIPE 8 IN. AND OVER IN NOMINAL DIAMETER FOR USE IN CENTRAL STATIONS AT PRESSURES OF 400 PSI AND OVER AND HIGH TEMPERATURES OR OTHER APPLICATIONS WHERE A SUPERIOR GRADE OF PIPE IS REQUIRED

S1. These requirements shall not be considered unless specified in the order, in which event the supplementary tests specified in Paragraphs S2 to S6 shall be made at the mill at the purchaser's expense and witnessed by his inspector before shipment of the material. If these tests are required for smaller size pipe, they shall be made the subject of agreement between the manufacturer and the purchaser.

Check Analysis

S2. Check analysis may be made on any length of pipe. Individual lengths failing to conform to the chemical requirements prescribed in Table I shall be rejected.

Transverse Tension Test

S3. Transverse tension tests may be made on specimens from both ends of each length of pipe. If the specimen from either end of any length fails to conform to the mechanical properties prescribed in Table II, that length shall be rejected.

Flattening Test

S4. The flattening tests specified in Section 8 may be made on specimens from both ends of each length of pipe. Crop ends may be used. If the specimen from either end of any length fails to conform to the specified requirements, that length shall be rejected.

Finish and Metal Structure

S5. The steel shall have a homogeneous structure as shown by the etching test described in Paragraph S6.

Etching Tests

S6. Etching tests may be made on sections from any pipe, and shall show sound and reasonably uniform material, free from injurious laminations, cracks, and similar objectionable defects. If the specimen from any length shows objectionable defects, that length may be rejected.

EXPLANATORY NOTES

NOTE 1.—For allowable working stresses, see the Code for Pressure Piping (ASA No.: B31.1—1955) of the American Standards Association, and the Boiler Construction Code of the American Society of Mechanical Engineers.

Consideration should be given to possible graphitization of the material at the higher temperatures at which it may be used.

NOTE 2.—Grade A rather than grade B pipe should be used for close coiling, cold bending, or for forge welding. The purpose for which the pipe is to be used should be stated in the order. This note is not intended to prohibit the cold bending of grade B seamless pipe.

NOTE 3.—Table III is the recommendation of the Sectional Committee on Standardization of Dimensions and Material of Wrought-Iron and Wrought-Steel Pipe and Tubing, functioning under the procedure of the American Standards Association, ASA Project No.: B36, except for the omission of all 30-in. sizes.

APPENDIX I

TABLE V.—CALCULATED "H" VALUES FOR SEAMLESS PIPE.

Size (Nominal Inside Diameter), in.	Outside Diameter, in.	Wall Thickness, in.	Schedule Number	Distance, in Inches, Between Plates "H" by Formula: $H = \frac{(1+e)t}{e+t/d}$		Size (Nominal Inside Diameter), in.	Outside Diameter, in.	Wall Thickness, in.	Schedule Number	Distance, in Inches, Between Plates "H" by Formula: $H = \frac{(1+e)t}{e+t/d}$	
				Grade A	Grades B & C					Grade A	Grades B & C
2½	2.875	0.203	40	1.456	1.545			0.250	10	2.759	3.045
		0.276	80	1.694	1.779			0.312	20	3.294	3.617
		0.375	160	1.925	2.002			0.375	30	3.792	4.146
								0.438	40	4.669	5.125
3	3.500	0.216	40	1.646	1.755	14 OD	14.000	0.593	60	5.234	5.647
		0.300	80	1.955	2.062			0.750	80	6.064	6.494
		0.438	160	2.306	2.398			0.937	100	6.887	7.322
								1.093	120	7.479	7.902
3½	4.000	0.226	40	1.788	1.912			1.250	140	7.974	8.397
		0.318	80	2.153	2.276			1.406	160	8.416	8.827
		0.237	40	1.929	2.067						
4	4.500	0.337	80	2.350	2.489			0.250	10	2.824	3.124
		0.438	120	2.687	2.818			0.312	20	3.387	3.730
		0.531	160	2.896	3.022			0.375	30	3.915	4.294
								0.500	40	4.854	5.284
		0.258	40	2.205	2.372	16 OD	16.000	0.656	60	5.855	6.324
5	5.563	0.375	80	2.747	2.920			0.843	80	6.861	7.352
		0.500	120	3.179	3.346			1.031	100	7.709	8.206
		0.625	160	3.509	3.667			1.218	120	8.426	8.919
								1.438	140	9.141	9.625
		0.280	40	2.473	2.669			1.593	160	9.579	10.050
6	6.625	0.432	80	3.213	3.419						
		0.562	120	3.682	3.884			0.250	10	2.876	3.189
		0.718	160	4.116	4.307			0.312	20	3.462	3.823
								0.438	30	4.535	4.963
		0.250	20	2.477	2.702			0.562	40	5.457	5.941
		0.277	30	2.668	2.902			0.750	60	6.656	7.185
		0.322	40	2.964	3.210	18 OD	18.000	0.937	80	7.663	8.214
		0.406	60	3.451	3.711			1.156	100	8.657	9.216
8	8.625	0.500	80	3.914	4.181			1.375	120	9.495	10.043
		0.593	100	4.305	4.573			1.562	140	10.115	10.660
		0.718	120	4.750	5.013			1.781	160	10.665	11.198
		0.812	140	5.036	5.293						
		0.906	160	5.288	5.538			0.250	10	2.919	3.242
								0.375	20	4.101	4.521
		0.250	20	2.615	2.868			0.500	30	5.143	5.632
		0.307	30	3.054	3.333			0.593	40	5.841	6.367
		0.365	40	3.459	3.757	20 OD	20.000	0.812	60	7.272	7.856
		0.500	60	4.268	4.592			1.031	80	8.464	0.976
10	10.750	0.593	80	4.738	5.070			1.281	100	9.601	10.221
		0.718	100	5.320	5.621			1.500	120	10.452	11.069
		0.843	120	5.747	6.077			1.750	140	11.284	11.889
		1.000	140	6.242	6.564			1.968	160	11.913	12.504
		1.125	160	6.580	6.892						
								0.250	10	2.986	3.326
		0.250	20	2.711	2.985			0.375	20	4.236	4.686
		0.330	30	3.366	3.683			0.562	30	5.869	6.437
		0.406	40	3.921	4.266			0.687	40	6.831	7.454
		0.562	60	4.892	5.271	24 OD	24.000	0.968	60	8.690	9.390
12	12.750	0.687	80	5.542	5.934			1.218	80	10.061	10.793
		0.843	100	6.231	6.627			1.531	100	11.449	12.244
		1.000	120	6.817	7.209			1.812	120	12.585	13.332
		1.125	140	7.222	7.607			2.062	140	13.424	14.150
		1.312	160	7.747	8.119			2.343	160	14.248	14.958

APPENDIX II

TABLE VI.—TABLE OF MINIMUM WALL THICKNESSES ON INSPECTION FOR NOMINAL (AVERAGE) PIPE WALL THICKNESSES.

NOTE 1.—The following equation, upon which this table is based, may be applied to calculate minimum wall thickness from nominal (average) wall thickness:

$$t_n \times 0.875 = t_m$$

where:
t_n = nominal (average) wall thickness in inches, and
t_m = minimum wall thickness in inches.

The wall thickness is expressed to three decimal places, the fourth decimal place being carried forward or dropped, in accordance with the Recommended Practices for Designating Significant Places in Specified Limiting Values (ASTM Designation E 29).

NOTE 2.—This table is a master table covering wall thicknesses available in the purchase of different classifications of pipe, but it is not meant to imply that all of the walls listed therein are obtainable under this specification.

Nominal (Average) Thickness (t_n), in.	Minimum Thickness on Inspection (t_m), in.	Nominal (Average) Thickness (t_n), in.	Minimum Thickness on Inspection (t_m), in.	Nominal (Average) Thickness (t_n), in.	Minimum Thickness on Inspection (t_m), in.
0.068	0.060	0.294	0.257	0.750	0.656
0.088	0.077	0.300	0.262	0.812	0.710
0.091	0.080	0.307	0.269	0.843	0.738
0.095	0.083	0.308	0.270	0.864	0.756
0.113	0.099	0.312	0.273	0.875	0.766
0.119	0.104	0.318	0.278	0.906	0.793
0.125	0.109	0.322	0.282	0.937	0.820
0.126	0.110	0.330	0.289	0.968	0.847
0.133	0.116	0.337	0.295	1.000	0.875
0.140	0.122	0.343	0.300	1.031	0.902
0.145	0.127	0.344	0.301	1.062	0.929
0.147	0.129	0.358	0.313	1.093	0.956
0.154	0.135	0.365	0.319	1.125	0.984
0.156	0.136	0.375	0.328	1.156	1.012
0.179	0.157	0.382	0.334	1.218	1.066
0.187	0.164	0.400	0.350	1.250	1.094
0.188	0.164	0.406	0.355	1.281	1.121
0.191	0.167	0.432	0.378	1.312	1.148
0.200	0.175	0.436	0.382	1.343	1.175
0.203	0.178	0.437	0.382	1.375	1.203
0.216	0.189	0.438	0.383	1.406	1.230
0.218	0.191	0.500	0.438	1.438	1.258
0.219	0.192	0.531	0.465	1.500	1.312
0.226	0.198	0.552	0.483	1.531	1.340
0.237	0.207	0.562	0.492	1.562	1.367
0.250	0.219	0.593	0.519	1.593	1.394
0.258	0.226	0.600	0.525	1.750	1.531
0.276	0.242	0.625	0.547	1.781	1.558
0.277	0.242	0.656	0.573	1.812	1.586
0.279	0.244	0.674	0.590	1.968	1.722
0.280	0.245	0.687	0.601	2.062	1.804
0.281	0.246	0.718	0.629	2.343	2.050

SPECIFICATION FOR STRUCTURAL STEEL FOR LOCOMOTIVES AND CARS

SA-113

(IDENTICAL WTH ASTM SPECIFICATION A 113-58 EXCEPT THAT GRADES A AND B HAVE BEEN DELETED)

Scope

1. This specification covers carbon-steel plates (except boiler and firebox plates) intended primarily for use in locomotive and car construction.

General Requirements for Delivery

2. Material furnished under this specification shall conform to the applicable requirements of the current edition of the Specification for General Requirements for Delivery of Rolled Steel Plates, Shapes, Sheet Piling, and Bars for Structural Use (ASTM Designation: A 6).

Process

3. The steel shall be made by one or more of the following processes: open hearth, basic oxygen, or electric furnace.

Chemical Composition

4. When subjected to the ladle and check analyses, respectively, required by the provisions of Specification A 6, the steel shall conform to the requirements as to chemical composition prescribed in Table I.

Tensile Properties

5. (*a*) The material as represented by the test specimens shall conform to the requirements as to tensile properties prescribed in Table II.

TABLE I.—CHEMICAL REQUIREMENTS.

	Ladle Analysis	Check Analysis
Phosphorus, max, per cent:		
Acid	0.06	0.075
Basic	0.04	0.05
Sulfur, max, per cent	0.05	0.063
Copper, when copper steel is specified, min, per cent	0.20	0.18
Carbon, max, per cent	0.40	0.44
Phosphorus, max, per cent:		
Acid	0.06	0.075
Basic	0.04	0.05
Sulfur, max, per cent	0.05	0.063
Silicon, min, per cent	0.20	0.18
Copper, when copper steel is specified, min, per cent	0.20	0.18

TABLE II.—TENSILE REQUIREMENTS.

	Grade C, Cold Pressing Plates
Tensile strength, psi	48 000 to 58 000
Yield point, min, psi	26 000
Elongation in 8 in., min, per cent	26[b]
Elongation in 2 in., min, per cent	...

[b] See Section 6(*a*) and (*d*).

(*b*) For material under $\frac{5}{16}$ in. in thickness, a deduction from the percentage of elongation in 8 in. prescribed in Table II of 1.25 per cent shall be made for each decrease of $\frac{1}{32}$ in. of the specified thickness below $\frac{5}{16}$ in.

(*c*) For material over $\frac{3}{4}$ in. in thickness, a deduction from the percentage of elongation in 8 in. prescribed in Table II of 0.50 per cent shall be made for each increase of $\frac{1}{8}$ in. of the specified thickness above $\frac{3}{4}$ in. This deduction shall not exceed 3 per cent.

Bending Properties

6. Bend-test specimens for plates for cold pressing, grade C, shall stand being bent cold through 180 deg flat on themselves without cracking on the outside of the bent portion.

Number of Tests

7. Two tension and two bend tests shall be made from each heat, unless the finished material from a heat is less than 30 tons, when one tension test and one bend test will be sufficient. If, however, material from one heat differs $\frac{3}{8}$ in. or more in thickness, one tension test and one bend test shall be made from both the thickest and the thinnest material rolled, regardless of the weight represented.

SPECIFICATION FOR OPEN-HEARTH IRON PLATES OF FLANGE QUALITY

SA-129

(IDENTICAL WITH ASTM SPECIFICATION A 129-56)

Scope

1. (*a*) This specification covers three types of open-hearth iron plates of flange quality.

(*b*) The maximum thickness of plates to be ordered under this specification shall be 2 in.

General Requirements for Delivery

2. Material furnished under this specification shall conform to the applicable requirements of the current edition of the Tentative Specification for General Requirements for Delivery of Rolled Steel Plates of Flange and Firebox Qualities (ASTM Designation: A 20).

Process

3. The iron shall be made by the basic open-hearth process.

Chemical Composition

4. The iron shall conform to the requirements as to chemical composition prescribed in Table I.

Tensile Properties

5. (*a*) The material as represented by the tension test specimens shall conform to the requirements as to tensile properties prescribed in Table II.

(*b*) For material under $\frac{5}{16}$ in. in thickness, a deduction from the percentage of elongation in 8 in. specified in Table II of 1.25 per cent shall be made for each decrease of $\frac{1}{32}$ in. of the specified thickness below $\frac{5}{16}$ in.

(*c*) For material over $\frac{3}{4}$ in. in thickness, a deduction from the percentage of elongation in 8 in. specified in Table II of 0.5 per cent shall be made for each increase of $\frac{1}{8}$ in. of the specified thickness above $\frac{3}{4}$ in. This deduction shall not exceed 3 per cent.

Bending Properties

6. The bend test specimen shall stand being bent cold through 180 deg. without cracking on the outside of the bent portion, as follows: for material 1 in. or under in thickness, flat on itself; and for material over 1 in., in thickness, to an inside diameter which is equal to the thickness.

Test Specimens

7. (*a*) Test specimens shall be prepared for testing from material in its rolled condition.

(*b*) When so specified in the purchase order with the mill, test specimens representing the plates shall be stress-relieved by gradually and uniformly heating them to a temperature between 1100 and 1200 F. (or a temperature range otherwise agreed upon between the manufacturer and the fabricator), holding at temperature for at least 1 hr. per inch of thickness and cooling in still atmosphere to a temperature not exceeding 600 F.

Number of Tests

8. One tension test and one bend test shall be made from each plate as rolled.

NOTE.—The term "plate as rolled" used here refers to the unit plate rolled from a slab or directly from an ingot in its relation to the location and number of specimens; not to its condition.

TABLE I.—CHEMICAL REQUIREMENTS.

	Type A		Type B		Type C	
	Ladle Analysis	Check Analysis	Ladle Analysis	Check Analysis	Ladle Analysis	Check Analysis
Phosphorus, max., per cent	0.015	0.015	0.015	0.015	0.015	0.015
Sulfur, max., per cent	0.04	0.05	0.04	0.05	0.04	0.05
Total of the metalloids: carbon, manganese, phosphorus, sulfur, and silicon, max., per cent	0.10	0.14	0.25	0.29	0.25	0.29
Copper, min., per cent	...	...	0.40	0.38	0.20	0.18
Molybdenum, min., per cent	...	...	0.05	0.05	...	...

TABLE II.—TENSILE REQUIREMENTS.

	Type A	Type B	Type C
Tensile strength, min., psi	40 000	44 000	42 000
Yield point, min., psi	22 000	27 000	23 000
Elongation in 8 in., min., per cent	20[a]	25[a]	22[a]
Elongation in 2 in., min., per cent	23	28	25

[a] See Sections 5 (*b*) and (*c*)

SPECIFICATION FOR ELECTRIC-RESISTANCE-WELDED STEEL PIPE

SA-135

(IDENTICAL WITH ASTM SPECIFICATION A 135-61T)

Scope

1. These specifications cover two grades of electric-resistance-welded steel pipe 30 in. and under in diameter with nominal (average) walls. The pipe is intended for conveying liquid, gas, or vapor; and only grade A is adapted for flanging and bending.[3] The suitability of pipe for various purposes is somewhat dependent upon its dimensions, properties, and conditions of service, so that the purpose for which the pipe is intended should be stated in the order.

Process

2. The steel shall be made by one or more of the following processes: open-hearth, basic oxygen, or electric-furnace.

Chemical Composition

3. The steel shall conform to the following requirements as to chemical composition:

Phosphorus, max, per cent	0.050
Sulfur, max, per cent	0.060

Ladle Analysis

4. An analysis of each heat of steel shall be made by the manufacturer to determine the percentages of the elements specified in Section 3. When requested by the purchaser, the chemical composition thus determined shall be reported to the purchaser or his representative, and shall conform to the requirements specified in Section 3.

Check Analysis

5. (*a*) An analysis may be made by the purchaser on samples of pipe selected at random and shall conform to the requirements specified in Section 3. Samples for chemical analysis, except for spectrochemical analysis, shall be taken in accordance with the Method of Sampling Steel, Cast Iron, Open-Hearth Iron, and Wrought Iron for Determination of Chemical Composition (ASTM Designation: E 59). The number of samples shall be determined as follows:

Pipe Size, In.	Number of Samples Selected
Under 6	2 from each lot of 400 pipes or fraction thereof
6 to 20, incl.	2 from each lot of 200 pipes or fraction thereof
Over 20 to 30, incl.	2 from each lot of 100 pipes or fraction thereof

(*b*) *Retests.*—If the analysis of either length of pipe or length of skelp does not conform to the requirements specified in Section 3, analyses of two additional lengths from the same lot shall be made, each of which shall conform to the requirements specified.

Tensile Properties

6. (*a*) The material shall conform to the requirements as to tensile properties prescribed in Table I.

(*b*) The yield point shall be determined by the drop of the beam, by the halt in the gage of the testing machine, by the use of dividers, or by other approved methods. When a definite yield point is not exhibited, the yield strength corresponding to a permanent offset of 0.2 per cent of the gage length of the specimen, or to a total extension of 0.5 per cent of the gage length under load shall be determined.

(*c*) The test specimen taken across the weld shall show a tensile strength not less than the minimum tensile strength specified for the grade of pipe ordered. This test will not be required for pipe under 6 in. in outside diameter.

Flattening Test

7. (*a*) A specimen at least 4 in. in length shall be flattened cold between parallel plates in three steps with the weld located either zero or 90 deg from the line of direction of force as required in Paragraph (*b*). During the first step, which is a test for ductility of the weld, no cracks or breaks on the inside or outside surfaces shall occur until the distance between the plates is less than two thirds of the original outside diameter of the pipe. As a second step, the flattening shall be continued. During the second step, which is a test for ductility exclusive of the weld, no cracks or breaks on the inside or outside surfaces shall occur until the distance between the plates is less than one third of the original outside diameter of the pipe but is not less than five times the wall thickness of the pipe. During the third step, which is a test for soundness, the flattening shall be continued until the specimen breaks or the opposite walls of the pipe meet. Evidence of laminated or unsound material or of incomplete weld that is revealed during the entire flattening test shall be cause for rejection.

(*b*) For pipe produced in single lengths, the flattening test specified in Paragraph (*a*) shall be made on both crop ends cut from each length of pipe. The tests from each end shall he made alternately with the weld at 0 deg and at 90 deg from the line of direction of force. For pipe produced in multiple lengths, the flattening test shall be made on crop ends representing the front and back of each coil with the weld at 90 deg from the line of direction of force, and on two intermediate rings representing each coil with the weld 0 deg from the line of direction of force.

(*c*) Surface imperfections in the test specimen before flattening, but revealed during the first step of the flattening test, shall be judged in accordance with the finish requirements in Section 16.

(*d*) Superficial ruptures as a result of surface imperfections shall not be cause for rejection.

Hydrostatic Test

8. (*a*) Each length of pipe shall be tested at the mill to a hydrostatic pressure calculated from the following formula, provided that in no case shall the test pressure exceed 2500 psi:

$$P = \frac{2St}{D}$$

where:

P = minimum hydrostatic test pressure in pounds per square inch,
S = allowable fiber stress (16,000 to 18,000 psi for grade A and 20,000 to 22,000 psi for grade B, but in no case shall the stress produced exceed 80 per cent of the specified yield point),
t = wall thickness in inches, and
D = outside diameter in inches.

(*b*) The hydrostatic pressure shall be maintained for not less than 5 sec and, for pipe with wall thicknesses greater than 0.154 in., the pipe shall be jarred near both ends with a 2-lb steel hammer or its equivalent.

Nondestructive Electric Test

9. As an alternate to the hydrostatic test, as applied to schedule 10 in ¼ to 4 in. nominal pipe size, and when accepted by the purchaser, each pipe shall be tested at the mill by passing it through a nondestructive tester capable of detecting any defect that completely penetrates the pipe wall or any defect equal to or greater than those shown in Table II. Such tests shall be made on the welded seam, and the adjacent metal affected thereby, or on the entire cross-section of the pipe, at the option of the manufacturer.

Test Specimens and Methods of Testing

10. (*a*) The test specimens and the tests required by these specifications shall conform to those described in the Methods and Definitions for the Mechanical Testing of Steel Products (ASTM Designation: A 370).

(*b*) The longitudinal tension test specimen shall be taken from the end of the pipe, or by agreement between the manufacturer and the purchaser may be taken from the skelp, at a point approximately 90 deg from the weld, and shall not be flattened between gage marks. The sides of each specimen shall be parallel between gage marks.

(*c*) Transverse weld test specimens from electric welded pipe shall be taken with the weld at the center of the specimen. All transverse test specimens shall be approximately 1½ in. wide in the gage length and shall represent the full wall thickness of the pipe from which the specimen was cut.

(*d*) All specimens shall be tested at room temperature.

Number of Tests

11. (*a*) One longitudinal tension test shall be made on one length[5] from each lot of 400 lengths or fraction thereof of each size under 6 in., and one longitudinal and one transverse tension test on one length from each lot of 200 lengths or fraction thereof of each size 6 to 20 in., and on one length from each lot of 100 lengths or fraction thereof of each size over 20 to 30 in. When taken from the skelp, the number of tests shall be determined in the same manner as when taken from the finished pipe.

(*b*) If any test specimen shows defective machining or develops flaws not associated with the quality of the steel or the welding, it may be discarded and another specimen substituted.

(*c*) If the percentage of elongation of any tension test specimen is less than

[3] This provision is not intended to prohibit the cold bending of grade B pipe.

TABLE I.—TENSILE REQUIREMENTS.

	Grade A	Grade B
Tensile strength, min, psi	48 000	60 000
Yield point, min, psi	30 000	35 000
Elongation in 2 in., min, per cent:		
Basic minimum elongation for walls 5/16 in. and over in thickness, longitudinal strip tests, and for all small sizes tested in full section	35	30
For longitudinal strip tests, the width of the gage section shall be 1½ in. and a deduction for each 1/32-in. decrease in wall thickness below 5/16 in. from the basic minimum elongation of the following percentage	1.75[a]	1.50[a]

[a] The following table gives computed minimum values:

Wall Thickness, in.	Elongation in 2 in., min, per cent	
	Grade A	Grade B
5/16 (0.312)	35.00	30.00
9/32 (0.281)	33.25	28.50
¼ (0.250)	31.50	27.00
7/32 (0.219)	29.75	25.50
3/16 (0.188)	28.00	24.00
5/32 (0.156)	26.25	22.50
⅛ (0.125)	24.50	21.00
3/32 (0.094)	22.75	19.50
1/16 (0.062)	21.00	18.00

NOTE.—The above table gives the computed minimum elongation values for each 1/32-in. decrease in wall thickness. Where the wall thickness lies between two values shown above, the minimum elongation value shall be determined by the following equation:

Grade	Equation
A	$E = 56t + 17.50$
B	$E = 48t + 15.00$

where:
E = elongation in 2 in. in per cent, and
t = actual thickness of specimen, in inches.

TABLE II.—DIMENSIONS OF MAXIMUM ALLOWABLE DEFECTS IN PIPE WALLS.

Wall Thickness[a]		Minor Dimension (Least Dimension of the Defect), Length or Depth	Defective Area (Length × Radial Depth), Sq in.
Inches	BWG		
0.035	20	0.006 in.	0.0025
0.049	18	0.006 in.	0.0030
0.065	16	12½ per cent of wall	0.0030
0.083	14	12½ per cent of wall	0.0040
0.095	13	12½ per cent of wall	0.0040
0.109 and over	12 and heavier	12½ per cent of wall	0.0050

[a] For intermediate wall thicknesses, the next lower wall thickness shown in the table shall apply.

that specified in Section 6(*a*) and any part of the fracture is more than ¾ in. from the center of the gage length of a 2-in. specimen, as indicated by scribe scratches marked on the specimen before testing, the specimen may be discarded and another substituted.

(*d*) The flattening test specified in Section 7 shall be made on both crop ends cut from each length of pipe. When pipe is produced in multiple lengths, flattening tests are required on the crop ends from the front and back ends of each coil and on two intermediate rings representing each coil.

(*e*) Each length of pipe shall be subjected to the hydrostatic test specified in Section 8.

Retests

12. (*a*) If the results of the tension tests of any lot do not conform to the requirements specified in Section 6, retests of two additional lengths from the same lot shall be made, each of which shall conform to the requirements specified.

(*b*) If any section of the pipe fails to comply with the requirements of Section 7(*a*), for pipe produced in single lengths other sections may be cut from the same end of the same length until satisfactory tests are obtained, except that the finished pipe shall not be shorter than 80 per cent of its length after the initial cropping; otherwise, the length shall be rejected. For pipe produced in multiple lengths, retests may be cut from each end of each individual length in the multiple; such tests shall be made with the weld alternately 0 deg and 90 deg from the line of direction of force.

[5] Length is defined as the length as ordered, except that in the case of orders for cut lengths shorter than single random, the term lot shall apply to the lengths as rolled, prior to cutting to the required short lengths.

Permissible Variations in Weight and Dimensions

13. (*a*) *Weight.*—The weight of any length of pipe shall not vary more than 3.5 per cent under or 10 per cent over that specified, but the carload weight shall be not more than 1.75 per cent under the nominal weight. The weight of pipe furnished to schedule 10 shall not vary more than ±10 per cent from that prescribed in Appendix II.

NOTE 1.—A system of standard pipe sizes has been approved by the American Standards Association as American Standard for Wrought Steel and Wrought Iron Pipe (ASA No.: B36.10—1959). Copies of this American Standard are available from The American Society of Mechanical Engineers, 345 E. 47th St., New York 17, N. Y.

(*b*) *Diameter.*—The outside diameter shall not vary more than ±1 per cent from the nominal size specified.

(*c*) *Thickness.*—The minimum wall thickness at any point shall be not more than 12.5 per cent under the nominal wall thickness specified.

NOTE 2.—The minimum wall thickness on inspection is shown in Table III (Appendix I).

Lengths

14. Unless otherwise specified, pipe shall be furnished in lengths averaging 38 ft or over, with a minimum length of 20 ft, but not more than 5 per cent may be under 32 ft. Jointers made by welding are permissible. When threaded pipe is ordered, jointers shall be made by threading and shall not exceed 5 per cent of the order. Pipe furnished to schedule 10 shall be in a specified length between 16 and 22 ft with shorts down to 8 ft. Short lengths shall not exceed 10 per cent of the footage.

Workmanship

15. (*a*) *Schedule 10 Pipe.*—Pipe furnished to schedule 10 shall be plain end only. All inside and outside cutting burrs shall be removed. This generally involves breaking the corners.

(*b*) *Ends, Plain End Pipe.*—Unless otherwise specified, plain end pipe for use with the Dresser or Dayton type coupling shall be reamed both outside and inside sufficiently to remove all burrs. Plain end pipe for welding shall be beveled on the outside to an angle of 35 deg with a tolerance of ±2.5 deg and with a width of flat at the end of the pipe of $\frac{1}{16} \pm \frac{1}{32}$ in. When material is ordered beveled to any other than a 35-deg angle, it should be understood that the angle is to be measured from a line drawn perpendicular to the axis of the pipe. This means that a greater amount of material is removed with a 60-deg angle than with a 35-deg angle. Pipe shall be sufficiently free from indentations, projections, or roll marks for a distance of 8 in. from the end of the pipe to make a tight joint with the rubber gasket type of coupling. All plain end pipe intended for Dresser or Dayton type joints or for welding, sizes 10¾ in. and smaller in outside diameter, shall be not more than $\frac{1}{32}$ in. smaller than the nominal outside diameter for a distance of 8 in. from the end of the pipe and shall permit the passing for a distance of 8 in. of a ring gage which has a bore $\frac{1}{16}$ in. larger than the nominal outside diameter of the pipe. Sizes larger than 10¾ in. in outside diameter shall be not more than $\frac{3}{32}$ in. smaller than the nominal outisde diameter for a distance of 8 in. from the end of the pipe and shall permit the passing for a distance of 8 in. of a ring gage which has a bore $\frac{3}{32}$ in. larger than the nominal outside diameter of the pipe.

(*b*) *Ends, Threaded Pipe.*—Each end of threaded pipe shall be reamed to remove all burrs. All threads shall be in accordance with the American Standard Pipe Threads[6] and cut so as to make a tight joint when the pipe is tested at the mill to the specified internal hydrostatic pressure. The variation from the standard, when tested with the standard working gage, shall not exceed one and one-half turns either way. Pipe shall not be rounded-out by hammering in order to get a full thread. There shall be not more than two black threads for ¾-in. taper among the perfect threads. Black threads should not be confused with imperfect threads, such as those torn, shaven, or broken.

(*c*) *Couplings.*—Each length of threaded pipe shall be provided with one coupling, the threads of which shall be in accordance with the American Standard for Pipe Threads.[6] Threads shall be cut so as to make a tight joint. Couplings may be of wrought iron or steel. Taper-tapped couplings shall be furnished on all weights of threaded pipe 2½ in. and larger.[7]

Finish

16. (*a*) The finished pipe shall be reasonably straight and free from injurious defects. Defects in excess of 12.5 per cent of the nominal wall thickness shall be considered injurious.

[6] A complete description of the American Standard Pipe Threads applicable to pipe, valves, and fittings is contained in the American Standard for Pipe Threads (ASA No.: B2.1—1960); also "Screw-Thread Standards for Federal Services, 1942," National Bureau of Standards *Handbook H28*, January, 1942, the pertinent data in both sources being identical.

[7] For sizes 2 in. and smaller, it is commercial practice to furnish straight-tapped couplings for standard-weight (Schedule 40) pipe and taper-tapped couplings for extra-strong (Schedule 80) and double-extra-strong pipe. If taper-tapped couplings are required for sizes 2 in. and smaller on standard weight (Schedule 40) pipe, line pipe in accordance with Specification 5L of the American Petroleum Institute should be ordered, thread lengths to be in accordance with the American Standard for Pipe Threads (ASA No.: B2.1—1960). The taper-tapped couplings provided on line pipe in these sizes may be used on mill-threaded standard weight pipe of the same size.

(*b*) *Repair by Welding.*—Injurious defects in the pipe wall, provided their depth does not exceed one-third the specified wall thickness, shall be repaired by electric welding. Defects in the welds such as sweats or leaks, unless otherwise specified, shall be repaired or the piece rejected at the option of the manufacturer. Repairs of this nature shall be made by completely removing the defect, cleaning the cavity, and then electric welding.

(*c*) All repaired pipe shall be retested hydrostatically in accordance with Section 8.

Marking

17. (*a*) Each length of pipe shall be legibly marked with appropriate symbols by stenciling, stamping, or rolling to show by whom manufactured, the grade of pipe, and that it conforms to these specifications.

(*b*) When it is specified that certain requirements of these specifications are to be completed by the purchaser upon receipt of the material, the manufacturer shall indicate that all requirements of the specifications have not been completed by a letter X, Y, or Z immediately following the specification number. This letter may be removed after completion of all requirements in accordance with these specifications. An explanation of specification requirements to be completed is provided in Section 19(*b*).

Protective Coating

18. After the pipe has been subjected to the hydrostatic test, and if required by the purchaser, it shall be thoroughly cleaned of all dirt, oil, grease, loose scale, and rust; then dried, and given a protective coating of the kind and in the manner specified by the purchaser. Pipe furnished to schedule 10 shall be normally shipped with a light coating of processing oil. If so specified, the pipe can be given a mill coating or a special coating.

Inspection

19. (*a*) The inspector representing the purchaser shall have free entry, at all times while work on the contract of the purchaser is being performed, to all parts of the manufacturer's works that concern the manufacture of the material ordered. The manufacturer shall afford the inspector, without charge, all reasonable facilities to satisfy him that the material is being furnished in accordance with these specifications. All tests (except check analysis) and inspection shall be made at the place of manufacture prior to shipment, unless otherwise specified, and shall be so conducted as not to interfere unnecessarily with the operation of the works.

(*b*) *Certification.*—The certificate or report accomplished by the manufacturer shall include a statement of explanation for the letter added to the specification number (see Section 17(*b*)), when all the requirements of these specifications have not been completed. The purchaser must certify that all requirements of the specifications have been completed before removal of the letter X, Y, or Z.

Rejection

20. Each length of pipe that develops injurious defects during shop working or application operations will be rejected, and the manufacturer shall be notified.

APPENDIX I

TABLE III.—TABLE OF MINIMUM WALL THICKNESSES ON INSPECTION FOR NOMINAL (AVERAGE) PIPE WALL THICKNESSES.

NOTE 1.—The following formula, upon which this table is based, may be applied to calculate minimum wall thickness from nominal (average) wall thickness:

$$t_n \times 0.875 = t_m$$

where:
t_n = nominal (average) wall thickness in inches, and
t_m = minimum wall thickness in inches.

The wall thickness is expressed to three decimal places, the fourth decimal place being carried forward or dropped, in accordance with the Recommended Practices for Designating Significant Places in Specified Limiting Values (ASTM Designation: E 29).

NOTE 2.—This table is a master table covering wall thicknesses available in the purchase of different classifications of pipe, but it is not meant to imply that all of the walls listed therein are obtainable under this specification.

Nominal (Average) Thickness (t_n), in.	Minimum Thickness on Inspection (t_m), in.	Nominal (Average) Thickness (t_n), in.	Minimum Thickness on Inspection (t_m), in.	Nominal (Average) Thickness (t_n), in.	Minimum Thickness on Inspection (t_m), in.
0.068	0.060	0.294	0.257	0.750	0.656
0.088	0.077	0.300	0.262	0.812	0.710
0.091	0.080	0.307	0.269	0.843	0.738
0.095	0.083	0.308	0.270	0.864	0.756
0.113	0.099	0.312	0.273	0.875	0.766
0.119	0.104	0.318	0.278	0.906	0.793
0.125	0.109	0.322	0.282	0.937	0.820
0.126	0.110	0.330	0.289	0.968	0.847
0.133	0.116	0.337	0.295	1.000	0.875
0.140	0.122	0.343	0.300	1.031	0.902
0.145	0.127	0.344	0.301	1.062	0.929
0.147	0.129	0.358	0.313	1.093	0.956
0.154	0.135	0.365	0.319	1.125	0.984
0.156	0.136	0.375	0.328	1.156	1.012
0.179	0.157	0.382	0.334	1.218	1.066
0.187	0.164	0.400	0.350	1.250	1.094
0.188	0.164	0.406	0.355	1.281	1.121
0.191	0.167	0.432	0.378	1.312	1.148
0.200	0.175	0.436	0.382	1.343	1.175
0.203	0.178	0.437	0.382	1.375	1.203
0.216	0.189	0.438	0.383	1.406	1.230
0.218	0.191	0.500	0.438	1.437	1.258
0.219	0.192	0.531	0.465	1.500	1.312
0.226	0.198	0.552	0.483	1.531	1.340
0.237	0.207	0.562	0.492	1.562	1.367
0.250	0.219	0.593	0.519	1.593	1.394
0.258	0.226	0.600	0.525	1.750	1.531
0.276	0.242	0.625	0.547	1.781	1.558
0.277	0.242	0.656	0.574	1.812	1.586
0.279	0.244	0.674	0.590	1.968	1.722
0.280	0.245	0.687	0.601	2.062	1.804
0.281	0.246	0.719	0.629	2.343	2.050
[illegible]	[illegible]	[illegible]	[illegible]	[illegible]	[illegible]
[illegible]	[illegible]	[illegible]	[illegible]	[illegible]	[illegible]
[illegible]	[illegible]	[illegible]	[illegible]	[illegible]	[illegible]
[illegible]	[illegible]	[illegible]	[illegible]	[illegible]	[illegible]

APPENDIX II

TABLE IV.—DIMENSIONS, NOMINAL WEIGHTS AND TEST PRESSURES FOR LIGHT WALL STEEL PIPE.

Nominal Pipe Size, in.	Outside Diameter, in.	Schedule 10			
		Nominal Wall Thickness, in.[a]	Weight, lb per ft	Test Pressure, psi	
				Grade A	Grade B
¾	1.050	0.083	0.86	2500	2500
1	1.315	0.109	1.40	2500	2500
1¼	1.660	0.109	1.81	2400	2500
1½	1.900	0.109	2.09	2100	2400
2	2.375	0.109	2.64	1700	1900
2½	2.875	0.120	3.52	1500	1700
3	3.500	0.120	4.32	1200	1400
3½	4.000	0.120	4.96	1000	1200
4	4.500	0.120	5.61	900	1100

[a] Corresponds to Schedule 10S as listed in the American Standard for Stainless Steel Pipe (ASA B36.19—1957). The test pressures are calculated by the following formula (but shall not exceed 2500 psi):

$$P = \frac{2St}{D}$$

where:
P = pressure in pounds per square inch,
S = fiber stress, 60 per cent of the specified minimum yield point,
t = thickness of wall in inches, and
D = outside diameter in inches.

SPECIFICATION FOR ELECTRIC-RESISTANCE-WELDED CARBON STEEL AND OPEN HEARTH IRON BOILER TUBES

SA-178

(IDENTICAL WITH ASTM SPECIFICATION A 178-61T)

Scope

1. (*a*) This specification covers electric-resistance-welded tubes made of carbon steel and open-hearth iron, and intended for use as boiler tubes, boiler flues, superheater flues, and safe ends.[3]

(*b*) This specification covers tubes ½ to 5 in., inclusive, in outside diameter and 0.035 to 0.320 in., inclusive, in minimum wall thickness.

(*c*) The purchaser shall specify in the order the outside diameter, minimum wall thickness, and grade desired. The inside diameter shall not be specified.

General Requirements

2. Material furnished under this specification shall conform to the applicable requirements of the current edition of the Specification for General Requirements for Carbon, Ferritic Alloy, and Austenitic Alloy Steel Tubes (ASTM Designation: A 450), unless otherwise provided herein.

Process

3. The steel or iron shall be made by one or more of the following processes: open-hearth, basic oxygen, or electric furnace.

Manufacture

4. Tubes shall be made by electric-resistance welding.

Heat Treatment

5. After welding all tubes shall be normalized at a temperature above the upper critical temperature.

Chemical Composition

6. The steel or iron shall conform to the requirements as to chemical composition prescribed in Table I.

[3] Type C tubes are not suitable for safe-ending by forge welding.

Check Analysis

7. (*a*) An analysis of two lengths of flat rolled stock or two tubes from each lot of 250 tubes or fraction thereof, and from each lot of 2000 ft or fraction thereof of safe-end material, may be made by the purchaser. If on flat rolled stock, samples shall be milled from the entire cross-section of the stock. The chemical composition thus determined shall conform to the requirements specified.

(*b*) If the analysis of one length of flat rolled stock or of either tube does not conform to the requirements specified, an analysis of two additional lengths of flat rolled stock or two additional tubes of the same lot shall be made, each of which shall conform to the requirements specified.

TABLE I.—CHEMICAL REQUIREMENTS.

	Grade A, Low-Carbon Steel	Grade B, Open-Hearth Iron	Grade C, Medium-Carbon Steel
Carbon, per cent	0.06 to 0.18	0.03 max	0.35 max
Manganese, per cent	0.27 to 0.63	0.03 max	0.80 max
Phosphorus, max, per cent	0.035	0.02	0.050
Sulfur, max, per cent	0.035	0.045	0.060

TABLE II.—TENSILE REQUIREMENTS.

Tensile strength, min, psi	60 000
Yield point, min, psi	37 000
Elongation in 2 in., min, per cent	30
For longitudinal strip tests the width of the gage section shall be 1 in. and a deduction for each ½₃₂-in. decrease in wall thickness below 5/16 in. from the basic minimum elongation of the following percentage	1.50[a]

[a] The following table gives the computed minimum values:

Wall Thickness, in.	Elongation in 2 in., min, per cent
5/16 (0.312)	30.00
9/32 (0.281)	28.50
¼ (0.250)	27.00
7/32 (0.219)	25.50
3/16 (0.188)	24.00
5/32 (0.156)	22.50
⅛ (0.125)	21.00
3/32 (0.094)	19.50
1/16 (0.062)	18.00

NOTE.—The above table gives the computed minimum elongation values for each ½₃₂-in. decrease in wall thickness. Where the wall thickness lies between two values shown above, the minimum elongation value shall be determined by the following formula:

$$E = 48t + 15.00$$

where:
E = elongation in 2 in., in per cent, and,
t = actual thickness of specimen, in inches.

Crush Test

8. (*a*) When required by the purchaser, crushing tests shall be made on sections of tube 2½ in. in length which

shall stand crushing longitudinally, without cracking, splitting, or opening at the weld, as follows:

Wall Thickness of Tubes, in.	Height of Crushed Section, in.	
	Grades A and B Tubes	Grades C Tubes
0.135 and under....	¾, or until outside folds are in contact	Crush tests not required
Over 0.135..	1¼	...

(*b*) For tubing less than 1 in. in outside diameter, the length of the specimen shall be 2½ times the outside diameter of the tube. Slight surface checks shall not be cause for rejection.

Tensile Properties

9. Grade C tubes shall conform to the requirements as to tensile properties prescribed in Table II.

Mechanical Tests Required

10. (*a*) *Flattening Test:*

(*1*) For grades A and B, one flattening test shall be made on specimens from each of two tubes from each lot of 250 tubes or fraction thereof, and from each 2000 ft or fraction thereof of safe-end material.

(*2*) For grade C, one flattening test shall be made on specimens from each of two tubes from each lot of 250 tubes or fraction thereof.

(*b*) *Flange Test:*

(*1*) For grades A and B, one flange test shall be made on specimens from each of two tubes from each lot of 250 tubes or fraction thereof, and from each 2000 ft or fraction thereof of safe-end material.

(*2*) For grade C, one flange test shall be made on specimens from each of two tubes from each lot of 250 tubes or fraction thereof. The width of the flange shall not be less than 75 per cent of that specified in Specification A 450.

(*c*) *Crush Test.*—For grades A and B, when required by the purchaser, one crush test shall be made on specimens from each of two tubes from each lot of 250 tubes or fraction thereof, and from each 2000 ft or fraction thereof of safe-end material.

(*d*) *Tension Test.*—For grade C, one tension test shall be made on specimens from each of two tubes from each lot of 250 tubes or fraction thereof.

(*e*) *Reverse Flattening Test.*—One reverse flattening test shall be made on each 1500 ft of finished tubing.

(*f*) *Hydrostatic or Nondestructive Electric Test.*—Each tube shall be subjected to the hydrostatic test. When accepted by the purchaser as an alternate, the nondestructive electric test may be applied.

Forming Operations

11. Tubes when inserted in the boiler shall withstand expanding and beading without showing cracks or flaws, or opening at the weld.

Finish

12. Finished tubes shall be reasonably straight and have smooth ends free from burrs. They shall be free from injurious defects and shall have a workmanlike finish.

Marking

13. In addition to the marking prescribed in Specification A 450, the marking shall include the words "Electric-Resistance Welded," and whether the tube is made of steel or open-hearth iron.

SPECIFICATION FOR SEAMLESS COLD-DRAW LOW-CARBON STEEL HEAT-EXCHANGER AND CONDENSER TUBES

SA-179

(IDENTICAL WITH ASTM SPECIFICATION A 179-61T EXCEPT FOR EDITORIAL CORRECTIONS)

Scope

1. (*a*) This specification covers seamless cold-drawn low-carbon steel tubes (Note 1), for tubular heat exchangers, condensers, and similar heat transfer apparatus.

(*b*) This specification covers tubes ⅛ to 3 in., inclusive, in outside diameter (Note 2).

(*c*) The purchaser shall specify in the order the outside diameter and minimum wall thickness. The inside diameter shall not be specified.

NOTE 1.—The fundamental requirements of this specification, that is, kind and number of tests, permissible variations in dimensions, inspection, etc., are applicable to types of "low-alloy" steels intended to produce greater strength at elevated temperatures, but not intended specifically for corrosion resistance at elevated temperatures. When this specification is applied to such steels, special requirements as to chemical composition and hardness will need to be substituted for those prescribed herein and such requirements shall be a matter of agreement between the manufacturer and the purchaser.

NOTE 2.—Tubing smaller in outside diameter and having a thinner wall than indicated in this specification is available. These smaller sizes may require different mechanical and manipulating tests which should be a matter of agreement between the manufacturer and the purchaser.

General Requirements

2. Material furnished under this specification shall conform to the applicable requirements of the current edition of the Specification for General Requirements for Carbon, Ferritic Alloy, and Austenitic Alloy Steel Tubes (ASTM Designation: A 450), unless otherwise provided herein.

Process

3. The steel shall be made by either or both of the following processes: open-hearth or electric furnace.

Manufacture

4. Tubes shall be made by the seamless process and shall be cold-drawn.

Heat Treatment

5. Tubes shall be annealed to insure ductility.

Surface Condition

6. Finished tubes shall be free from scale. A slight amount of oxidation will not be considered as scale.

Chemical Composition

7. The steel shall conform to the following requirements as to chemical composition:

Carbon, per cent	0.06 to 0.18
Manganese, per cent	0.27 to 0.63
Phosphorus, max, per cent	0.048
Sulfur, max, per cent	0.058

Check Analysis

8. (*a*) An analysis of two tubes from each lot of 250 tubes or fraction thereof may be made by the purchaser. The chemical composition thus determined shall conform to the requirements specified.

(*b*) If the analysis of one tube does not conform to the requirements specified, an analysis of two additional tubes from the same lot shall be made, each of which shall conform to the requirements specified.

Hardness Requirements

9. The tubes shall have a Rockwell hardness number not exceeding B72.

Mechanical Tests Required

10. (*a*) *Flattening Test.*—One flattening test shall be made on specimens from each of two tubes from each lot of 250 tubes or fraction thereof.

(*b*) *Flaring Test.*—One flaring test shall be made on specimens from each of two tubes from each lot of 250 tubes or fraction thereof.

(*c*) *Flange Test.*—When specified as a substitute for the flaring test, for tubes having a wall thickness (actual mean wall) less than 10 per cent of the outside diameter, one test shall be made on specimens from each of two tubes from each lot of 250 tubes or fraction thereof. For tubes other than specified above, the flange test shall not be required.

(*d*) *Hardness Test.*—One Rockwell hardness determination shall be made on 5 per cent of all tubes.

(*e*) *Hydrostatic Test.*—Each tube shall be subjected to the hydrostatic pressure test.

Finish

11. Finished tubes shall be reasonably straight and have smooth ends free from burrs. They shall be free from injurious defects and shall have a workmanlike finish. Minor defects may be removed by grinding, provided the wall thickness is not decreased to less than that permitted in Table V of Specifications A 450.

Marking

12. In addition to the marking prescribed in Specification A 450, the marking shall include the name and order number of the purchaser.

SPECIFICATION FOR FORGED OR ROLLED STEEL PIPE FLANGES, FORGED FITTINGS, AND VALVES AND PARTS FOR GENERAL SERVICE

SA-181

(IDENTICAL WITH ASTM SPECIFICATION A 181-61T)

Scope

1. (*a*) These specifications cover forged or rolled steel pipe flanges, forged fittings, and valves and parts for general service (see Explanatory Note at end of these specifications).

(*b*) Two grades of material are covered, designated as grades I and II, respectively, and are classified in accordance with their chemical and physical properties as specified in Sections 5 and 8(*a*).

Process

2. The steel may be made by either or both of the following processes: open-hearth or electric-furnace.

Discard

3. A sufficient discard shall be made from each ingot to secure freedom from injurious piping and undue segregation.

Manufacturing Practice

4. (*a*) Material for forgings shall consist of ingots or blooms, billets, slabs, or bars, either forged or rolled from an ingot, and cut to the required length by a suitable process.

(*b*) The material shall be forged by hammering, pressing, rolling, extruding, or upsetting; it shall be brought as nearly as practicable to the finished shape and size by hot-working; and shall be so processed as to cause metal-flow during the hot-working operation in the direction most favorable for resisting the stresses encountered in service.

(*c*) When specified in the order, a sample forging may be sectioned and etched to show flow lines and the condition as regards internal imperfections. In such cases, the question of acceptable and unacceptable character of metal-flow shall be a subject for agreement between the manufacturer and the purchaser.

(*d*) When specified in the order, the manufacturer shall submit for approval of the purchaser a sketch showing the shape of the rough forging before machining.

(*e*) Forgings shall be protected against sudden or too rapid cooling from the rolling or forging while passing through the critical range.

(*f*) Large forgings intended for application to pressure vessels on which repair welding is permitted, may be so repaired, when mutually agreed between the manufacturer and the purchaser, provided the welding is performed in accordance with all the requirements of Part UF of Section VIII of the ASME Boiler and Pressure Vessel Code.

TABLE I.—CHEMICAL REQUIREMENTS

	Grade I	Grade II
Carbon, max, per cent	0.35	0.35
Manganese, max, per cent	0.90	0.90
Phosphorus, max, per cent	0.05[b]	0.05[b]
Silicon, max, per cent	[a]	[a]
Sulfur, max, per cent	0.05[b]	0.05[b]

[a] It may be necessary to add silicon to the composition for grade II and for the heavier thicknesses of grade I flanges in order to meet the required tensile properties. The silicon content shall not exceed 0.35 per cent.

[b] See Section 7.

TABLE II.—TENSILE REQUIREMENTS

	Grade I	Grade II
Tensile strength, min, psi	60 000	70 000
Yield point, min, psi	30 000	36 000
Elongation in 2 in., min, per cent	22	18
Reduction of area, min, per cent	35	24

Chemical Composition

5. The steel shall conform to the requirements as to chemical composition prescribed in Table I.

Ladle Analysis

6. An analysis of each heat of steel shall be made by the manufacturer to determine the percentages of the elements specified in Section 5.

Check Analysis

7. An analysis may be made by the purchaser from one forging representing each heat. Samples for analysis shall be taken not less than ¼ in. below the surface or from tension test specimens. The chemical composition thus determined shall conform to the requirements specified in Section 5, except that the phosphorus and sulfur content may each be 0.055 per cent.

Tensile Properties

8. (*a*) The material shall conform to the requirements as to tensile properties prescribed in Table II.

(*b*) The yield point shall be determined by the drop of the beam or halt in the gage of the testing machine, or by the use of dividers, at a crosshead speed not to exceed ½ in. per min. The tensile strength shall be determined at a speed of head not to exceed 1½ in. per min.

Test Specimens

9. (*a*) The tension test specimens taken from the forgings, billets, or bars shall be machined to the form and dimensions of the standard 2-in. gage length tension test specimen shown in Fig. 6 of the Methods and Definitions for Mechanical Testing of Steel Products (ASTM Designation: A 370), except as specified in Paragraph (*b*).

(*b*) In the case of small sections which will not permit of taking the standard test specimen specified in Paragraph (*a*), the tension-test specimen shall be as large as feasible and its dimensions shall be proportional to those shown in Fig. 6 of Methods A 370. The gage length for measuring elongation shall be four times the diameter of the specimen.[4]

(*c*) For the purpose of making tension tests the manufacturer shall supply suitable test specimens from the forgings or, at his option, furnish test blanks prepared from the billets or forging bar entering into the finished product, provided such test blank has undergone approximately the same working and heat treatment as the finished product.

Number of Tests

10. (*a*) One tension test shall be made from each heat.

(*b*) If any test specimen shows defective machining or develops flaws, it may be discarded and another specimen substituted.

Retests

11. If any of the results of the mechanical tests of any test lot do not conform to the requirements specified, the manufacturer may retest such lots but not more than twice, except with the approval of the purchaser on the basis of satisfactory metallurgical evidence that the cause of the failure is curable and the quality of the material is satisfactory. Retests shall be made as specified in Section 10(*a*).

[4] These requirements are in accordance with the provisions of Section 8 of the Methods of Tension Testing of Metallic Materials (ASTM Designation: E 8).

Workmanship

12. The forgings shall conform to the sizes and shapes specified by the purchaser.

Finish

13. The forgings shall be free from injurious defects and shall have a workmanlike finish.

Marking

14. Identification marks consisting of the manufacturer's symbol or name, designation of service rating, the designation A 181—I or A 181—II to indicate the grade of material, and the size shall be legibly stamped on each forging in accordance with the Standard Marking System for Valves, Fittings, Flanges, and Unions (SP-25—1960) of the Manufacturer's Standardization Society of the Valve and Fittings Industry, and in such position as not to injure the usefulness of the forging.

Inspection

15. (*a*) The inspector representing the purchaser shall have free entry, at all times while work on the contract of the purchaser is being performed, to all parts of the manufacturer's works that concern the manufacture of the material ordered. The manufacturer shall afford the inspector, without charge, all reasonable facilities to satisfy him that the material is being furnished in accordance with these specifications. All tests (except check analysis) and inspection shall be made at the place of manufacture prior to shipment, unless otherwise specified, and shall be so conducted as not to interfere unnecessarily with the operation of the works.

(*b*) *Certification.*—Unless otherwise specified in the order, a certification that the material conforms to the requirements of these specifications shall be the basis of acceptance of the material.

Rejection

16. (*a*) Unless otherwise specified, any rejection based on tests made in accordance with Section 7 shall be reported to the manufacturer within twelve working days from the receipt of samples by the purchaser.

(*b*) Material that shows injurious defects while being finished shall be rejected.

Rehearing

17. Samples tested in accordance with Section 7 that represent rejected material shall be preserved for two weeks from the date of the test report. In case of dissatisfaction with the results of the tests, the manufacturer may make claim for a rehearing within that time.

Explanatory Note

Note.—Reference may be made to the dimensional standards for hydraulic pressure ratings and corresponding temperatures formulated by the Sectional Committee on Standardization of Pipe Flanges and Fittings under the procedure of the American Standards Association, ASA Project B16, and more specifically to the American Standard for Steel Pipe Flanges and Flanged Fittings (ASA No.: B16.5—1961). Copies of this American Standard are obtainable from The American Society of Mechanical Engineers, 345 E. 47th St., New York 17, N. Y.

SPECIFICATION FOR FORGED OR ROLLED ALLOY-STEEL PIPE FLANGES, FORGED FITTINGS, AND VALVES AND PARTS FOR HIGH-TEMPERATURE SERVICE

SA-182

(IDENTICAL WITH ASTM SPECIFICATION A 182-61T)

Scope

1. (*a*) These specifications cover forged or rolled alloy-steel pipe flanges, forged fittings, and valves and parts intended for high-temperature service (Note 1). The term "forgings" used in these specifications shall be understood to cover one or all of the products mentioned above, either forged or rolled.

(*b*) Twenty-four grades are covered, including ten ferritic steels and fourteen austenitic steels, designated F 1, F 3, etc. Selection will depend upon design and service conditions, mechanical properties, and the high-temperature characteristics (Note 2).

(*c*) The H grades of the 300 series are modifications of the standard 300 grades and intended for service above 1000 F.

NOTE 1.—The committee formulating these specifications has included twenty-four grades of material that have been used rather extensively for the present purpose. Upon agreement between the manufacturer and the purchaser, other grades of material may be employed, provided they otherwise conform to the requirements of these specifications. Other compositions will be considered for inclusion by the committee from time to time as the need becomes apparent. It should be noted that it is not intended to imply that all the alloy steels shown are suitable over the entire temperature range. Some are suitable only at lower temperatures, unless low stresses are employed.

NOTE 2.—Pending the incorporation of high-temperature data in an appendix, which it is the purpose in due time to add, high-temperature properties, when it is desired that they be indicated or specified, shall be a matter of agreement between the manufacturer and the purchaser. No high-temperature tests shall be required on the materials selected unless made a matter of agreement between the manufacturer and the purchaser. When required, the short-time tests at elevated temperatures shall be in accordance with the Recommended Practice for Short-Time Elevated-Temperature Tension Tests of Materials (ASTM Designation: E 21), and the creep tests shall be in accordance with the Recommended Practice for Conducting Creep and Time-for-Rupture Tension Tests of Metallic Materials (ASTM Designation: E 139).

Process

2. The steel may be made by the electric-furnace, open-hearth, or other process approved by the purchaser.

Discard

3. A sufficient discard shall be made from each ingot to secure freedom from injurious piping and undue segregation. The steel shall have a homogeneous structure as shown by the macro-etch test in Section 14.

Manufacturing Practice

4. (*a*) Material for forgings shall consist of ingots or blooms, billets, slabs, or bars, either forged or rolled from an ingot, and cut to the required length by a suitable process.

(*b*) The material shall be forged by hammering, pressing, rolling, extruding, or upsetting; it shall be brought as nearly as practicable to the finished shape and size by hot-working; and shall be so processed as to cause metal-flow during the hot-working operation in the direction most favorable for resisting the stresses encountered in service.

(*c*) When specified in the order, a sample forging may be sectioned and etched to show flow lines and the condition as regards internal imperfections. In such cases, the question of acceptable and unacceptable character of metal flow shall be a subject for agreement between the manufacturer and the purchaser.

(*d*) When specified in the order, the manufacturer shall submit for approval of the purchaser a sketch showing the shape of the rough forging before machining.

Heat Treatment

5. (*a*) The ferritic steels shall be annealed, or normalized and tempered, except for grade F 6 which may be tempered only provided the tempering temperature is not less than 1250 F. If furnished in the normalized and tempered condition, the temperatures for tempering shall be not less than 850 F for grade F 5a, and not less than 1150 F for all other ferritic grades. Liquid quenching shall be permitted only by agreement with the purchaser.

NOTE 3.—It may not always be possible to meet the tensile requirements by annealing, in which case normalizing and tempering may be necessary.

NOTE 4.—The temperature for tempering should be at least 100 F above the intended service temperature; consequently, the purchaser should advise the manufacturer if the difference between the service temperature and the minimum tempering temperature specified in Section 5(*a*) is less than 100 F.

NOTE 5.—Certain of the ferritic steels covered by these specifications will harden if cooled rapidly from above their critical temperatures. Some will air harden, that is, become hardened to an undesirable degree when cooled in air from high temperatures. Therefore, consideration should be given to the necessity of suitable heat treatment following operations involving heating such steels above their critical temperatures, as in welding.

(*b*) All austenitic material shall be furnished in the heat treated condition. The heat treatment, except for the H grades, shall consist of heating the material to a minimum temperature of 1900 F and

TABLE I.—CHEMICAL REQUIREMENTS.

Identification Symbol	Grade	Carbon, per cent	Manganese, per cent	Phosphorus, max, per cent	Sulfur, max, per cent	Silicon per cent	Nickel, per cent	Chromium per cent	Molybdenum, per cent	Columbium plus Tantalum, per cent	Tantalum, max, per cent	Titanium, per cent
	Ferritic Steels											
F 1	Carbon-Molybdenum	0.30 max	0.50 to 0.85	0.045 max	0.045 max	0.15 to 0.35	....	....	0.44 to 0.65	....	....	....
F 5[a]	4 to 6 per cent Chromium	0.15 max	0.30 to 0.60	0.030	0.030	0.50 max	0.50 max	4.0 to 6.0	0.44 to 0.65	....	....	....
F 5a[a]	4 to 6 per cent Chromium	0.25 max	0.60 max	0.040	0.040	0.50 max	0.50 max	4.0 to 6.0	0.44 to 0.65	....	....	....
F 6	13 per cent Chromium	0.12 max	1.00 max	0.040	0.030	1.00 max	0.50 max	11.5 to 13.5	....	....	....	....
F 7	6 to 8 per cent Chromium	0.15 max	0.30 to 0.60	0.030	0.030	0.50 to 1.00	....	6.0 to 8.0	0.44 to 0.65	....	....	....
F 9	9 per cent Chromium	0.15 max	0.30 to 0.60	0.030	0.030	0.50 to 1.00	....	8.0 to 10.0	0.90 to 1.10	....	....	....
F 11	1.25 per cent Chromium, 0.5 per cent Molybdenum	0.10 to 0.20	0.30 to 0.80	0.040	0.040	0.50 to 1.00	....	1.00 to 1.50	0.44 to 0.65	....	....	....
F 12	1 per cent Chromium, 0.5 per cent Molybdenum	0.10 to 0.20	0.30 to 0.80	0.040	0.040	0.10 to 0.60	....	0.80 to 1.25	0.44 to 0.65	....	....	....
F 21	Chromium-Molybdenum	0.15 max	0.30 to 0.60	0.040	0.040	0.50 max	....	2.65 to 3.35	0.80 to 1.06	....	....	....
F 22	Chromium-Molybdenum	0.15 max	0.30 to 0.60	0.040	0.040	0.50 max	....	2.00 to 2.50	0.87 to 1.13	....	....	....
	Austenitic Steels											
F 304	18 Chromium, 8 Nickel	0.08 max	2.00 max	0.040	0.030	1.00 max	8.00 to 11.00	18.00 to 20.00	....	....	....	....
F 304H	18 Chromium, 8 Nickel	0.04 to 0.10	2.00 max	0.040	0.030	1.00 max	8.00 to 11.00	18.00 to 20.00	....	....	....	....
F 304L	18 Chromium, 8 Nickel, Low Carbon	0.035 max	2.00 max	0.040	0.030	1.00 max	8.00 to 13.00	18.00 to 20.00	....	....	....	....
F 310	25 Chromium, 20 Nickel	0.15 max	2.00 max	0.040	0.030	1.00 max	19.00 to 22.00	24.00 to 26.00	....	....	....	....
F 316	18 Chromium, 8 Nickel Modified with Molybdenum	0.08 max	2.00 max	0.040	0.030	1.00 max	10.00 to 14.00	16.00 to 18.00	2.00 to 3.00	....	....	....
F 316H	18 Chromium, 8 Nickel, Modified with Molybdenum	0.04 to 0.10	2.00 max	0.040	0.030	1.00 max	10.00 to 14.00	16.00 to 18.00	2.00 to 3.00	....	....	....
F 316L	18 Chromium, 8 Nickel Modified with Molybdenum, Low Carbon	0.035 max	2.00 max	0.040	0.030	1.00 max	10.00 to 15.00	16.00 to 18.00	2.00 to 3.00	....	....	....
F 321	18 Chromium, 8 Nickel Modified with Titanium	0.08 max	2.50 max	0.035	0.030	0.85 max	9.00 min	17.00 min	....	....	....	[b]
F 321H	18 Chromium, 8 Nickel, Modified with Titanium	0.04 to 0.10	2.50 max	0.035	0.030	0.85 max	9.00 min	17.00 min	....	....	....	[c]
F 347	18 Chromium, 8 Nickel Modified with Columbium	0.08 max	2.00 max	0.030	0.030	1.00 max	9.00 to 13.00	17.00 to 20.00	....	[d]	....	....
F 347H	18 Chromium, 8 Nickel, Modified with Columbium	0.04 to 0.10	2.00 max	0.030	0.030	1.00 max	9.00 to 13.00	17.00 to 20.00	....	[d]	....	....
F 348	18 Chromium, 8 Nickel Modified with Columbium	0.08 max	2.00 max	0.030	0.030	1.00 max	9.00 to 13.00	17.00 to 20.00	....	[d]	0.10	....
F 348H	18 Chromium, 8 Nickel, Modified with Columbium	0.04 to 0.10	2.00 max	0.030	0.030	1.00 max	9.00 to 13.00	17.00 to 20.00	....	[d]	0.10	....
F 10	20 Nickel, 8 Chromium	00.1 to 0.20	0.50 to 0.80	0.030	0.030	1.00 to 1.40	19.00 to 22.00	7.00 to 9.00	....	....	....	....

[a] Grades F 347 and F 348 shall have a columbium plus tantalum content of not less than ten times the carbon content and not more than 1.00 per cent.

[b] Grade F 321 shall have a titanium content of not less than five times the carbon content and not more than 0.60 per cent.

[c] Grades F 347H and F 348H shall have a columbium plus tantalum content of not less than 8 times the carbon content and not more than 1.00 per cent.

[d] Grade F 321H shall have a titanium content of not less than 4 times the carbon content and not more than 0.60 per cent.

* The present grade F 5a (0.25 max carbon) previous to 1955 was assigned the identification symbol F 5. Identification symbol F 5 in 1965 was assigned to the 0.15 max carbon grade to be consistent with ASTM specifications for other products such as pipe, tubing, bolting, welding fittings, etc.

quenching in water or rapidly cooling by other means.

(*c*) The H grades of the 300 series shall be solution treated at 1800 F, minimum, for grades F 304H and F 316H and at 1925 F, minimum, for grades F 321H, F 347H, and F 348H.

(*d*) When specified, grades F 347, F 348, and F 321 shall receive a stabilization treatment which shall consist in holding the forgings at 1500 to 1600 F for not less than 2 hr per in. of thickness and then cooling in the furnace or in air.

(*e*) Heat treatment may be performed before machining.

Chemical Composition[4]

6. Each alloy[5] shall conform to the requirements as to chemical composition prescribed in Table I, or to other chemical composition requirements as specified in the order.

Ladle Analysis

7. An analysis of each heat of steel shall be made by the steel manufacturer to determine the percentages of the elements specified in Section 6. This analysis shall be made from a sample taken not less than $\frac{1}{4}$ in. beneath the surface of a test ingot obtained during the pouring of the heat. The chemical composition thus determined, or that determined from a check analysis made by the forgings manufacturer, shall be reported to the purchaser or his representative, and shall conform to the requirements specified in Section 6.

Check Analysis

8. An analysis may be made by the purchaser from one forged or rolled flange, fitting, or valve or part, or from broken tension-test specimens representing each heat. Samples for analysis shall be taken not less than $\frac{1}{4}$ in. beneath the surface or from tension test specimens. The chemical composition thus determined shall conform to the requirements specified in Section 6.

[4] When material is ordered for welding fabrication, chemical and mechanical requirements shall be a matter of agreement between the manufacturer and the purchaser.

[5] Alloys have been numbered so that similar alloys in the corresponding specifications for pipe, tubing, forgings, and welding fittings for high-temperature service will bear the same number. No alloys numbered F 3 or F 4 are included herein as particular compositions corresponding to these numbers are not included in these specifications.

Tensile Properties

9. (*a*) The material shall conform to the requirements as to tensile properties,[4] prescribed in Table II at room temperature.

(*b*) The yield point shall be determined by the drop of the beam or halt in the gage of the testing machine, or by the use of dividers, at a crosshead speed not to exceed $\frac{1}{8}$ in. per min. Where a definite yield point is not exhibited, the yield strength corresponding to a limiting permanent offset of 0.2 per cent of the gage length of the specimen shall be used instead. The "offset method" of determining yield strength as described in the Methods of Tension Testing of Metallic Materials (ASTM Designation: E 8) shall be followed. The tensile strength shall be determined at a speed of head not to exceed $1\frac{1}{2}$ in. per min.

(*c*) The yield strength, where given, shall be determined by an extensometer reading to 0.0002 in. The extensometer shall be attached to the specimen at the gage marks and not to the shoulders of the specimen nor to any part of the testing machine.

TABLE II.—TENSILE AND HARDNESS REQUIREMENTS.

Grade	Tensile Strength, min, psi	Yield Point, min, psi	Elongation in 2 in. min, per cent	Reduction of Area, min, per cent	Brinell Hardness Number, max
Ferritic Steels:					
F 1	70 000	40 000	25.0	35.0	201
F 5	60 000	30 000	22.0	50.0	201
F 5a	90 000	65 000	22.0	50.0	248
F 6	85 000	55 000	25.0	60.0	241
F 7	60 000	36 000	22.0	50.0	201
F 9	100 000	70 000	20.0	40.0	262
F 11	70 000	40 000	20.0	30.0	201
F 12	70 000	40 000	20.0	30.0	201
F 21	70 000	40 000	20.0	30.0	...
F 22	70 000	40 000	20.0	30.0	201
Austenitic Steels:					
F 304	75 000[a]	30 000	45	50	...
F 304H	75 000[a]	30 000	45	50	...
F 304L	65 000	25 000	30	50	...
F 310	75 000	30 000	35	40	...
F 316	75 000[a]	30 000	45	50	...
F 316H	75 000[a]	30 000	45	50	...
F 316L	65 000	25 000	30	50	...
F 347	75 000[a]	30 000	45	50	...
F 347H	75 000[a]	30 000	45	50	...
F 348	75 000[a]	30 000	45	50	...
F 348H	75 000[a]	30 000	45	50	...
F 321	75 000[a]	30 000	45	50	...
F 321H	75 000[a]	30 000	45	50	...
F 10	80 000	30 000	40	50	...

[a] For sections over 5 in. in thickness, the minimum tensile strength shall be 70,000 psi.

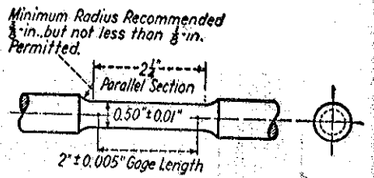

NOTE.—The gage length and fillets shall be as shown, but the ends may be of any shape to fit the holders of the testing machine in such a way that the load shall be axial. The reduced section shall have a gradual taper from the ends toward the center, with the ends 0.003 to 0.005 in. larger in diameter than the center.

FIG. 1.—Standard Round Tension-Test Specimen with 2-in. Gage Length.

Brinell Hardness

10. The Brinell hardness after final heat treatment shall not exceed the values shown in Table II.

Hydrostatic Tests

11. (*a*) Valve bodies or fittings and other pressure-containing parts shall be tested after machining to the hydrostatic shell test pressures prescribed in the American Standard for Steel Pipe Flanges and Flanged Fittings (ASA No. B16.5-1961) for the applicable alloy steel rating for which the forging is designed and shall show no leaks. Forgings ordered under these specifications for working pressures other than those listed in the American Standard ratings shall be tested to such pressures as may be agreed upon by the manufacturer and the purchaser.

(*b*) No hydrostatic test is required for welding neck or other flanges.

(*c*) It is realized that the forging manufacturer cannot perform pressure tests on rough forgings which are to be finally machined by others. Also, the fabricator of some finished forged parts cannot always test forgings which are designed to be pressure containing only after assembly by welding into a larger structure. However, the manufacturer of such forgings is responsible as required under Section 19(*b*) for the satisfactory performance of the forgings under the final test required in Paragraph (*a*).

Test Specimens

12. (*a*) The tension-test specimens

taken from the forgings, billets, or bars shall be machined to the form and dimensions shown in Fig. 1, except as specified in Paragraph (*b*).

(*b*) In the case of small sections which will not permit of taking the standard test specimen specified in Paragraph (*a*), the tension-test specimen shall be as large as feasible and its dimensions shall be proportional to those shown in Fig. 1. The gage length for measuring elongation shall be four times the diameter of the specimen.[6]

(*c*) For purpose of tests, the necessary extra forgings or test bars shall be provided. The test specimen, if cut from a flange, shall be cut tangentially from the flange portion approximately midway between the inner and outer surfaces and approximately midway between the front and back faces. When it is impracticable to provide extra forgings for test purposes, test bars may be made from the billet or bar, provided they are given approximately the same reduction and heat-treatment as the forgings.

Number of Tests

13. (*a*) One tension test at room temperature shall be made from each heat in each heat-treatment charge. The results of these tests shall be reported to the purchaser or his representative.

(*b*) If any test specimen shows defective machining, it may be discarded and another specimen substituted from the same heat and heat-treatment charge.

(*c*) If the percentage of elongation of any tension-test specimen is less than that prescribed in Table II and any part of the fracture is more than $\frac{3}{4}$ in. from the center of the gage length, as indicated by scribe scratches marked on the specimen before testing, a retest shall be allowed.

Retests

14. If any of the results of the mechanical tests of any test lot do not conform to the requirements specified, the manufacturer may retest such lots but not more than twice, except with the approval of the purchaser on the basis of satisfactory metallurgical evidence that the cause of the failure is curable and the quality of the material is satisfactory. Retests shall be made as specified in Section 12 (*a*).

Macro-Etch Tests

15. In case of question as to the soundness of material in any lot of forgings and its suitability for the intended service, a macro-etching test shall be made for each heat present in the lot. Etching tests[7] shall show sound and reasonably uniform material, free from injurious laminations, cracks, segregations, and similar objectionable defects. If on successive tests 10 per cent of any heat fail to pass the requirements of the macro-etch test, all forgings from that heat shall be rejected.

Workmanship

16. The forgings shall conform to the sizes and shapes specified by the purchaser.

Finish

17. The forgings shall be free from injurious defects and shall have a workmanlike finish.

Marking

18. Identification marks consisting of the manufacturer's symbol or name, designation of service rating, the specification number, the designation F 1, F 5, etc., showing the grade of material, and the size shall be legibly stamped on each forging in accordance with the Standard Marking System for Valves, Fittings, Flanges, and Unions (No. SP-25 – 1958) of the Manufacturers Standardization Society of the Valve and Fittings Industry, and in such position as not to injure the usefulness of the forging.

Inspection

19. (*a*) The inspector representing the purchaser shall have free entry, at all times while work on the contract of the purchaser is being performed, to all parts of the manufacturer's works that concern the manufacture of the material ordered. The manufacturer shall afford the inspector, without charge, all reasonable facilities to satisfy him that the material is being furnished in accordance with these specifications. All tests (except check analysis) and inspection shall be made at the place of manufacture prior to shipment and at the manufacturer's expense, unless otherwise specified, and shall be so conducted as not to interfere unnecessarily with the operation of the works.

(*b*) *Certification.*—Unless otherwise specified in the inquiry and order, a certification that the material conforms to the requirements of these specifications shall be the basis of acceptance of the material.

Rejection

20. (*a*) Unless otherwise specified, any rejection based on tests made in accordance with Section 8 shall be reported to the manufacturer within twelve working days from the receipt of samples or test reports by the purchaser.

(*b*) Each forging that develops injurious defects during shop working or application operations shall be rejected and the manufacturer notified. Where such defect occurs, the purchaser shall be entitled to conduct at his own expense such check tests as may be necessary to demonstrate the acceptability of the balance of the lot. At the purchaser's discretion, if 10 per cent of the forgings in any heat of a heat-treatment charge fail to conform to the specified chemical and mechanical requirements, the entire lot may be rejected.

Rehearing

21. Samples tested in accordance with Sections 8 and 15 that represent rejected material shall be preserved for two weeks from the date of the test report. In case of dissatisfaction with the results of the tests, the manufacturer may make claim for a rehearing within that time.

[6] These requirements are in accordance with the provisions of Section 8 of the Methods of Tension Testing of Metallic Materials (ASTM Designation: E 8).

[7] Pending development of etching methods applicable to the product covered by these specifications, it is recommended that the Recommended Practice for a Standard Macro-Etch Test for Routine Inspection of Iron and Steel, described in the *Metals Handbook*, Am. Soc. for Metals, 1948 Edition, p. 389, be followed.

SPECIFICATION FOR SEAMLESS CARBON STEEL BOILER TUBES FOR HIGH PRESSURE SERVICE

SA-192

(IDENTICAL WITH ASTM SPECIFICATION A 192-61T EXCEPT FOR EDITORIAL CORRECTIONS)

Scope

1. (*a*) This specification covers seamless carbon steel boiler and superheater tubes for high-pressure service.

(*b*) This specification covers tubes ½ to 7 in., inclusive in outside diameter and 0.085 to 1.000 in., inclusive, in minimum wall thickness.

(*c*) The purchaser shall specify in the order the outside diameter and minimum wall thickness. The inside diameter shall not be specified.

NOTE.—Tubing smaller in outside diameter and having a thinner wall than indicated in this specification is available. These smaller sizes may require different mechanical and manipulating tests which should be a matter of agreement between the manufacturer and the purchaser.

General Requirements

2. Material furnished under this specification shall conform to the applicable requirements of the current edition of the Specification for General Requirements for Carbon, Ferritic Alloy, and Austenitic Alloy Steel Tubes (ASTM Designation: A 450), unless otherwise provided herein.

Process

3. The steel shall be a killed steel made by either or both of the following processes: open hearth or electric furnace.

Manufacture

4. Tubes shall be made by the seamless process and shall be either hot-finished or cold-drawn, as specified.

Heat Treatment

5. Cold-drawn tubes shall be annealed "dead soft" after the final pass. Hot-finished tubes need not be annealed, unless specified by the purchaser.

Chemical Composition

6. The steel shall conform to the following requirements as to chemical composition:

Carbon, per cent	0.06 to 0.18
Manganese, per cent	0.27 to 0.63
Phosphorus, max, per cent	0.048
Sulfur, max, per cent	0.058
Silicon, max, per cent	0.25

Check Analysis

7. (*a*) An analysis of two tubes from each lot of 100 tubes or fraction thereof may be made by the purchaser. The chemical composition thus determined shall conform to the requirements specified.

(*b*) If the analysis of either tube does not conform to the requirements specified, an analysis of two additional tubes from the same lot shall be made, each of which shall conform to the requirements specified.

Hardness Requirements

8. The tubes shall have a hardness number not exceeding the following:

	Brinell Hardness Number (Tubes 0.200 in. and over in wall thickness)	Rockwell Hardness Number (Tubes less than 0.200 in. in wall thickness)
Hot-finished tubes	137	B77
Cold-drawn tubes	125	B72
Hot-finished tubes (annealed)	125	B72

Mechanical Test Required

9. (*a*) *Flattening Test.*—One flattening test shall be made on specimens from each end of two tubes selected from each lot of 100 tubes or fraction thereof.

(*b*) *Flaring Test.*—One flaring test shall be made on specimens from each end of two tubes selected from each lot of 100 tubes or fraction thereof. These tubes shall be selected apart from those used for the flattening test.

(*c*) *Hardness Test.*—One Brinell or Rockwell hardness determination shall be made on 5 per cent of all tubes.

(*d*) *Hydrostatic Test.*—Each tube shall be subjected to the hydrostatic pressure test.

Forming Operations

10. Tubes when inserted in the boiler shall stand expanding and beading without showing cracks or flaws. Superheater tubes when properly manipulated shall stand all forging, welding, and bending operations necessary for application without developing defects.

Finish

11. Finished tubes shall be reasonably straight and have smooth ends free from burrs. They shall be free from injurious defects and shall have a workmanlike finish. Minor defects may be removed by grinding provided the wall thicknesses and the outside diameters are not decreased to less than that permitted in Tables V and VI of Specifications A 450.

Marking

12. In addition to the marking prescribed in Specification A 450, the marking shall include the words "Seamless Steel" and whether the tube is hot-finished or cold-drawn.

EXPLANATORY NOTE

NOTE.—For purposes of design, the following tensile properties may be assumed:

Tensile strength, min, psi	47 000
Yield point, min, psi	26 000
Elongation in 2 in., min, per cent	35

SPECIFICATION FOR ALLOY-STEEL BOLTING MATERIALS FOR HIGH-TEMPERATURE SERVICE

SA-193

(IDENTICAL WITH ASTM SPECIFICATION A 193-61T)

Scope

1. (*a*) These specifications cover alloy-steel bolting material for pressure vessels, valves, flanges, and fittings for high-temperature service (Note 1). The term "bolting material" as used in these specifications covers rolled, forged, or strain hardened bars, and bolts, screws, studs, and stud bolts.

(*b*) Nine grades are covered, including five ferritic steels and four austenitic steels designated B5, B6, etc. Selection will depend upon design, service conditions, mechanical properties, and high-temperature characteristics (Note 2).

(*c*) Nuts for use with this bolting material are covered in Section 13.

NOTE 1.—In ordering material under these specifications, or incorporating it as a reference in any individual specifications, purchasers must designate the steel by identification symbol and analysis, or analysis alone, and definitely specify the minimum mechanical properties required as selected from Table II for any minimum tempering temperature that at least conforms to the requirements of Section 4 (*a*) or (*b*).

NOTE 2.—The committee formulating these specifications has included thirteen steel types of material that have been rather extensively used for the present purpose. Other compositions will be considered for inclusion by the committee from time to time as the need becomes apparent. High-temperature properties, when it is desired that they be indicated or specified, shall be a matter of agreement between the manufacturer and the purchaser. No high-temperature tests shall be required on the materials selected unless made a matter of agreement between the manufacturer and the purchaser.

NOTE 3.—For grades of alloy-steel bolting material suitable for use at the lower range of high-temperature applications, reference should be made to the Specifications for Quenched and Tempered Alloy Steel Bolts and Studs with Suitable Nuts (ASTM Designation: A 354).

Process

2. The steel shall be made by one or more of the following processes: open-hearth, electric-furnace, or crucible.

Discard

3. A sufficient discard shall be made from each ingot to secure freedom from injurious piping and undue segregation.

Heat Treatment

4. (*a*) Ferritic steels shall be properly heat treated as best suits the characteristics of each grade. Immediately after rolling or forging, the bolting material shall be allowed to cool to a temperature below the cooling critical range. The materials which are to be furnished in the liquid-quenched condition shall then be uniformly reheated to the proper temperature to refine the grain (a group thus reheated being known as a "quenching charge") and quenched in some liquid medium under substantially uniform conditions for each quenching charge. The materials which are to be furnished in the normalized or air-quenched condition shall be reheated to the proper temperature to refine the grain and cooled uniformly in air to a temperature below the cooling critical range. The material, whether liquid quenched or normalized, shall then be uniformly reheated or "tempered" at a temperature at least 100 F (56 C) higher than the proposed operating temperature, to which the material will be subjected in service.

(*b*) The austenitic steel shall receive a carbide solution treatment. This shall consist of allowing the material immediately after rolling or forging to cool at a rate sufficiently rapid to prevent injury to the material. It shall be reheated and held a sufficient time at a temperature at which the chromium carbide will go into solution and shall then be cooled in air or in a liquid medium at a rate sufficient to prevent the reprecipitation of the carbide.

(*c*) When increased mechanical properties are desirable, the austenitic bolting materials may be strain hardened.

Chemical Composition

5. Each alloy shall conform to the requirements as to chemical composition prescribed in Table I, or to other chemical requirements as specified in the order.

Ladle Analysis

6. An analysis of each heat of steel shall be made by the manufacturer to determine the percentages of the elements specified in Section 5. This analysis shall be made from a test ingot taken during the pouring of the heat. The chemical composition thus determined shall be reported to the purchaser or his representative, and shall conform to the requirements specified in Section 5.

Check Analysis

7. An analysis may be made by the purchaser from samples representing the bolting material. The chemical composition thus determined shall conform to the requirements specified in Section 5.

Tensile Properties

8. (*a*) The material shall conform to

the requirements as to tensile properties prescribed in Table II at room temperature after heat-treatment.

(*b*) The yield point shall be determined by the drop of the beam or other approved method, as described in Section 12(*a*) (*1*) or (*2*) of the Methods and Definitions for Mechanical Testing of Steel Products (ASTM Designation: A 370). The speed of testing shall not exceed $\frac{1}{8}$ in. per min. of crosshead speed. Where a definite yield point is not exhibited, the yield strength corresponding to a limiting permanent offset of 0.2 per cent of the gage length of the specimen

TABLE I.—CHEMICAL REQUIREMENTS.

Type	Ferritic Steels							
Identification Symbol	B5		B6					
Grade	5 per cent Chromium (AISI Type 501)		12 per cent Chromium (AISI Type 416, 416se, 410)					
			AISI Type 410		With Added Sulfur (AISI Type 416)		With Added Selenium (AISI Type 416se)	
	Range	Check Variation, Over or Under[a]	Range	Check Variation, Over or Under[a]	Range	Check Variation, Over or Under[a]	Range	Check Variation, Over or Under[a]
Carbon, per cent	0.10 min	0.01 under	0.15 max	0.01 under	0.15 max	0.01 under	0.15 max	0.01 under
Manganese, max, per cent	1.00	0.03 over	1.00	0.03 over	1.25	0.04 over	1.25	0.04 over
Phosphorus, max, per cent	0.040	0.005 over	0.040	0.005 over	0.06	0.010 over	0.06	0.010 over
Sulfur, max, per cent	0.030	0.005 over	0.030	0.005 over	0.15 min	0.010 under	0.06	0.010 over
Silicon, per cent	1.00 max	0.05 over	1.00 max	0.05 over	1.00 max	0.05 over	1.00 max	0.05 over
Chromium, per cent	4.00 to 6.00	0.10	11.50 to 13.50	0.15	12.00 to 14.00	0.15	12.00 to 14.00	0.15
Molybdenum, per cent	0.40 to 0.65	0.05	...	...	0.60 max	0.03 over	...	...
Selenium, per cent	...	...	...	...	...	...	0.15 min	0.03 under

Type	Ferritic Steels					
Identification Symbol	B7		B14		B16	
Grade	Chromium-Molybdenum (AISI 4140, 4142, 4145)		Chromium-Molybdenum-Vanadium		Chromium-Molybdenum-Vanadium	
	Range	Check Variation, Over or Under[a]	Range	Check Variation, Over or Under[a]	Range	Check Variation, Over or Under[a]
Carbon, per cent	0.38 to 0.48[b]	0.02	0.41 to 0.49	0.02	0.36 to 0.44	0.02
Manganese, per cent	0.75 to 1.00	0.04	0.45 to 0.70	0.03	0.45 to 0.70	0.03
Phosphorus, max, per cent	0.04	0.005 over	0.04	0.005 over	0.04	0.005 over
Sulfur, max, per cent	0.04	0.005 over	0.04	0.005 over	0.04	0.005 over
Silicon, per cent	0.20 to 0.35	0.02	0.20 to 0.35	0.02	0.20 to 0.35	0.02
Chromium, per cent	0.80 to 1.10	0.05	0.80 to 1.15	0.05	0.80 to 1.15	0.05
Molybdenum, per cent	0.15 to 0.25	0.02	0.30 to 0.40	0.02	0.50 to 0.65	0.03
Vanadium, per cent	...	...	0.20 to 0.30	0.03	0.25 to 0.35	0.03

Type	Austenitic Steels					
Identification Symbol	B8		B8C		B8M	
Grade	Unstabilized 18 Chromium-8 Nickel (AISI Type 304)		Stabilized 18 Chromium-8 Nickel (AISI Type 347)		18 Chromium-10 Nickel-2 Molybdenum AISI Type 316	
	Range	Check Variation, Over or Under[a]	Range	Check Variation, Over or Under[a]	Range	Check Variation over or under[a]
Carbon, max, per cent	0.08	0.01 over	0.08	0.01 over	0.08	0.01 over
Manganese, max, per cent	2.00	0.04 over	2.00	0.04 over	2.00	0.04 over
Phosphorus, max, per cent	0.045	0.010 over	0.045	0.010 over	0.45	0.010 over
Sulfur, max, per cent	0.030	0.005 over	0.030	0.005 over	0.30	0.005 over
Silicon, max, per cent	1.00	0.05 over	1.00	0.05 over	1.00	0.05 over
Nickel, per cent	8.00 to 12.00	0.15	9.00 to 13.00	0.15	10.00 to 14.00	0.15 over and under
Chromium, per cent	18.00 to 20.00	0.20	17.00 to 19.00	0.20	16.00 to 18.00	0.20 over and under
Columbium plus tantalum, per cent	...	...	10 x carbon content, min	0.05 under	...	...
Molybdenum, per cent	...	...	...	...	2.00 to 3.00	0.10 over and under

TABLE I.—(*Concluded*)

Type	Austenitic Steels	
Identification Symbol	B8T	
Grade	Stabilized 18 Chromium-8 Nickel (AISI Type 321)	
	Range	Check Variation, Over or Under[a]
Carbon, max, per cent	0.08	0.01 over
Manganese, max, per cent	2.00	0.04 over
Phosphorus, max, per cent	0.045	0.010 over
Sulfur, per cent	0.030 max	0.005 over
Silicon, max, per cent	1.00	0.05 over
Nickel, per cent	9.00 to 12.00	0.15
Chromium, per cent	17.00 to 19.00	0.20
Titanium, per cent	5 x carbon content, min	0.05 under

[a] Unless otherwise specified, separate determinations may vary from the specified ranges, except that elements in any heat must not vary both above and below the specified range.

[b] For bar sizes over 3½ to 4 in., inclusive, the carbon content may be 0.50 per cent, max.

TABLE II.—TENSILE REQUIREMENTS.[a]

NOTE.—Mechanical properties given in boldface type represent the standard heat treatment to be given material when stocked for use under the specification as agreed by manufacturers.

Grade	Diameter, in.	Minimum Tempering Temperature, deg Fahr	Tensile Strength, min, psi	Yield Point, min, psi	Elongation in 2 in. or 4 diameters, min, per cent	Reduction of Area, min, per cent
FERRITIC STEELS						
B5 4 to 6 per cent Chromium	Up to 4, incl	1100	100 000	80 000	16	50
B6 13 per cent Chromium	Up to 4, incl	1100	110 000	85 000	15	50
B7 Chromium-Molybdenum	2½ and under	1100	125 000	105 000	16	50
	Over 2½ to 4	1100	115 000	95 000	16	50
	Over 4 to 7	1100	100 000	75 000	18	50
B14[b] Chromium-Molybdenum-Vanadium	2½ and under	1200	125 000	105 000	16	50
B16 Chromium-Molybdenum-Vanadium	2½ and under	1200	125 000	105 000	18	50
	Over 2½ to 4	1200	110 000	95 000	17	45
	Over 4 to 7	1200	100 000	85 000	16	45
AUSTENITIC STEELS						
B8, B8C, B8M and, B8T 18 Chromium 8 Nickel	All diameters	Carbide solution treated	75 000	30 000	35	50
	¾ and under	Strain hardened to surface Brinell hardness of 320, max	125 000	100 000	12	35
	Over ¾ to 1, incl		115 000	80 000	15	35
	Over 1 to 1¼, incl		105 000	65 000	20	35
	Over 1¼ to 1½ incl		100 000	50 000	28	45

[a] Charpy impact properties may be specified as agreed upon by the manufacturer and the purchaser.

[b] Special normalizing treatment required.

shall be used as described in Section 13(*b*) of Methods A 370. The tensile strength shall be determined at a maximum crosshead speed of 1⅛ in. per min.

Test Specimens

9. (*a*) Tension test specimens taken from finished bolts, screws, studs or stud bolts shall be machined to the form and dimensions and shall be taken from positions shown in Section F 2, Paragraph (*d*) of Methods A 370. Tension test specimens from bar stock are covered by Section 5(*b*).

(*b*) Austenitic steels in the strain hardened condition will not show uniform properties throughout the section in sizes over ¾ in. in diameter.

Number of Tests

10. (*a*) For heat treated bars, one tension test shall be made for each diameter of each heat represented in each tempering charge. When heat-treated without interruption in continuous furnaces, the material in a lot shall be the same heat, same prior condition, same size, and subjected to the same heat treatment. Not fewer than two tension tests shall represent a lot selected on the basis of one tension test from each 10,000 lb.

(*b*) For studs, bolts, screws, etc., one tension test shall be made for each diameter of each heat involved in the lot. Each lot shall consist of the following.

(*c*) Tension tests are not required to be made on bolts, screws, studs, or stud

Diameter, in.	Lot size
1⅛ and under	1500 lb or fraction thereof
Over 1⅛ to 1¾, incl.	4500 lb or fraction thereof
Over 1¾ to 2½, incl.	6000 lb or fraction thereof
Over 2½	100 pieces or fraction thereof

bolts which are fabricated from heat-treated bars furnished in accordance with the requirements of these specifications and tested in accordance with Paragraph (*a*), provided they are not given a subsequent heat treatment.

Retests

11. If the results of the mechanical tests of any test lot do not conform to the requirements specified, the manufacturer may re-treat such lot not more than twice, in which case two additional tension tests shall be made from such lot, all of which shall conform to the requirements specified.

Finish

12. (*a*) Bolts, screws, studs, and stud bolts shall be pointed and shall have a workmanlike finish.

(*b*) Standard permissible variations for dimensions of bars shall be as prescribed in Table III.

(*c*) Headed bolts shall be semifinished, hexagonal in shape, and in accordance with the dimensions for the regular or heavy series, as required, of the American Standard for Wrench-Head Bolts and Nuts and Wrench Openings (ASA No. B18.2—1960). Unless otherwise specified, the American Standard heavy hexagon series shall be used.

Nuts

13. Bolts, studs, and stud bolts shall be equipped with nuts conforming to the Specifications for Carbon and Alloy Steel Nuts for Bolts for High-Pressure and High-Temperature Service (ASTM Designation: A 194).

TABLE III.—PERMISSIBLE VARIATIONS IN SIZE OF HOT-ROLLED BARS.

Specified Size, In.	Permissible Variations from Specified Size, In.		Out-of-Round in.
	Over	Under	
5/16 and under	0.005	0.005	0.008
Over 5/16 to 7/16, incl.	0.006	0.006	0.009
Over 7/16 to 5/8, incl.	0.007	0.007	0.010
Over 5/8 to 7/8, incl.	0.008	0.008	0.012
Over 7/8 to 1, incl.	0.009	0.009	0.013
Over 1 to 1⅛, incl.	0.010	0.010	0.015
Over 1⅛ to 1¼, incl.	0.011	0.011	0.016
Over 1¼ to 1⅜, incl.	0.012	0.012	0.018
Over 1⅜ to 1½, incl.	0.014	0.014	0.021
Over 1½ to 2, incl.	1/64	1/64	0.023
Over 2 to 2½, incl.	1/32	0	0.023
Over 2½ to 3½, incl.	3/64	0	0.035
Over 3½ to 4½, incl.	1/16	0	0.046
Over 4½ to 5½, incl.	5/64	0	0.058
Over 5½ to 6½, incl.	1/8	0	0.070
Over 6½ to 7 incl.	5/32	0	0.085

Threads

14. (*a*) All alloy-steel bolts, studs, stud bolts, and accompanying nuts, unless otherwise specified, shall be threaded in accordance with the American Standard for Screw Threads (ASA No. B1.1—1960) Class 2A fit, sizes 1 in. and smaller in diameter with the Coarse-Thread Series, and 1⅛ in. and larger in diameter with the 8-Pitch-Thread Series.

(*b*) Where practical, all threads shall be formed after heat-treatment.

Marking

15. The serial marking for identification of material and the manufacturer's identification mark shall be stamped on the top of the head of bolts and screws, and on one end of studs, and stud bolts. The identification symbol shall be as shown in Table I. In the case of grades B8, B8C, B8M and B8T strain hardened as provided in Table II, a line shall be stamped under the grade symbol in order to distinguish it from bolting which has not been strain hardened.

Inspection

16. (*a*) The inspector representing the purchaser shall have free entry, at all times while work on the contract of the purchaser is being performed, to all parts of the manufacturer's works that concern the manufacture of the material ordered. The manufacturer shall afford the inspector, without charge, all reasonable facilities to satisfy him that the material is being furnished in accordance with these specifications. All tests (except check analysis) and inspection shall be made at the place of manufacture prior to shipment, unless otherwise specified, and shall be so conducted as not to interfere unnecessarily with the operation of the works.

(*b*) *Certification.*—When agreed upon in writing between the manufacturer and the purchaser, a certification that the material conforms to the requirements of these specifications shall be the basis of acceptance of the material. Otherwise, the manufacturer shall report to the purchaser or his representative the results of the chemical analyses and mechanical tests made in accordance with these specifications.

Rejection

17. (*a*) Unless otherwise specified, any rejection based on tests made in accordance with Section 7 shall be reported to the manufacturer within five working days from the receipt of samples by the purchaser.

(*b*) Material that shows injurious defects subsequent to its acceptance at the manufacturer's works shall be rejected and the manufacturer shall be notified.

Rehearing

18. Samples tested in accordance with Section 7 that represent rejected material shall be preserved for two weeks from the date of the test report. In the case of dissatisfaction with the results of the test, the manufacturer may make claim for a rehearing within that time.

SPECIFICATION FOR CARBON AND ALLOY-STEEL NUTS FOR BOLTS FOR HIGH-PRESSURE AND HIGH-TEMPERATURE SERVICE

SA-194

(IDENTICAL WITH ASTM SPECIFICATION A 194-59T)

Scope

1. (*a*) These specifications cover steel nuts for bolts used in high-pressure or high-temperature service, or both.

(*b*) Ten grades of material for services varying in degree of severity are covered:

Grades 3, 4, 6, 8, 8C, 8T, and 8F for service under the most severe conditions, and

Grades 1, 2, and 2H for less severe service conditions.

Process

2. The steel shall be made by one or both of the following processes: open-hearth or electric-furnace.

Fabrication

3. (*a*) Grades 1 and 2 nuts shall be made by the hot-forged or cold processes or machined from hot-forged or hot-rolled bars.

(*b*) Grades 2H, 3, 4, and 6 nuts shall be made by the hot-forged or cold process, or shall be machined from hot-forged, hot-rolled, or cold-drawn bars and shall be heat-treated to meet the required physical properties. Unless otherwise specified, these grades of nuts shall be reheated above the critical range of the steel and quenched in a suitable medium. They shall then be tempered at a temperature not less than that specified as follows:

TABLE I.—CHEMICAL REQUIREMENTS.

Type	Ferritic Steels		
Identification Symbol	1	2 and 2H	4
Grade	Carbon	Carbon	Carbon-Molybdenum
Carbon, per cent	0.15 min	0.40 min	0.40 to 0.50
Manganese, per cent	...	...	0.50 to 0.95
Phosphorus, max, per cent	...	0.05	0.04
Sulfur, max, per cent	...	0.05	0.05
Silicon, per cent	...	...	0.15 min
Chromium, per cent	...	...	...
Molybdenum, per cent	...	...	0.20 min

Identification Symbol	3		6			
Grade	5 per cent Chromium (AISI Type 501)		12 per cent Chromium (AISI Type 416)			
			With Added Sulfur		With Added Selenium	
	Range	Check Variation Over or Under[a]	Range	Check Variation Over or Under[a]	Range	Check Variation Over or Under[a]
Carbon, per cent	0.10 min	0.01 under	0.15 max	0.01 under	0.15 max	0.01 under
Manganese, max, per cent	1.00	0.03 over	1.25	0.04	1.25	0.04 over
Phosphorus, max, per cent	0.040	0.005 over	0.06	0.01 over	0.06	0.01 over
Sulfur, max, per cent	0.030	0.005 over	0.15 min	0.010 under	0.06	0.010 over
Silicon, max, per cent	1.00	0.05 over	1.00	0.05 over	1.00	0.05 over
Chromium, per cent	4.00 to 6.00	0.10	12.00 to 14.00	0.15	12.00 to 14.00	0.15
Molybdenum, per cent	0.40 to 0.65	0.05	0.60 max[b]	0.03 over	...	...
Selenium, per cent	...	...	...	...	0.15 min	0.03 under
Zirconium, per cent	...	...	0.60 max[b]	0.05 over	...	...

[a] Unless otherwise specified, separate determinations may vary from the specified ranges, except that elements in any heat must not vary both above and below the specified range.

[b] At manufacturer's option; reported only when intentionally added.

Grade	Minimum Tempering Temperature, deg Fahr
2H	850
3	1050
4	1100
6	1100

facturing to a temperature of at least 1000 F (538 C).

(*b*) Nuts made by the hot process or from hot-forged or hot-rolled bars need not be subjected to this stress relieving.

TABLE 1.—(*Continued*).

Type	Austenitic Steels			
Identification Symbol	8		8C	
Grade	Unstabilized 18 Chromium-8 Nickel (AISI Type 304)		Stabilized 18 Chromium-8 Nickel (AISI Type 347)	
	Range	Check Variation Over or Under[a]	Range	Check Variation Over or Under[a]
Carbon, max, per cent	0.08	0.01 over	0.08	0.01 over
Manganese, max, per cent	2.00	0.04 over	2.00	0.04 over
Phosphorus, max, per cent	0.045	0.010 over	0.045	0.010 over
Sulfur, max, per cent	0.030	0.005 over	0.030	0.005 over
Silicon, max, per cent	1.00	0.05 over	1.00	0.05 over
Nickel, per cent	8.00 to 12.00	0.15	9.00 to 13.00	0.15
Chromium, per cent	18.00 to 20.00	0.20	17.00 to 19.00	0.20
Columbium plus tantalum, per cent	...	...	10 x carbon content, min	0.05 under
Tantalum, per cent	...	...	...	...

Identification Symbol	8T		8F			
Grade	Stabilized 18 Chromium-8 Nickel (AISI Type 321)		Free Machining 18 Chromium-8 Nickel (AISI Type 303)			
			With Added Sulfur		With Added Selenium	
	Range	Check Variation Over or Under[a]	Range	Check Variation Over or Under[a]	Range	Check Variation Over or Under[a]
Carbon, max, per cent	0.08	0.01 over	0.15	0.01 over	0.15	0.01 over
Manganese, max, per cent	2.00	0.04 over	2.00	0.04 over	2.00	0.04 over
Phosphorus, max, per cent	0.045	0.010 over	0.20	0.010 over	0.20	0.010 over
Sulfur, max, per cent	0.030	0.005 over	0.15 min	0.010 under	0.06	0.010 over
Silicon, max, per cent	1.00	0.05 over	1.00	0.05 over	1.00	0.05 over
Nickel, per cent	9.00 to 12.00	0.15	8.00 to 10.00	0.10	8.00 to 10.00	0.10
Chromium, per cent	17.00 to 19.00	0.20	17.00 to 19.00	0.20	17.00 to 19.00	0.20
Molybdenum, per cent	...	...	0.60 max[b]	0.03 over	...	...
Selenium, per cent	...	...	...	...	0.15 min	0.03 under
Titanium, per cent	5 x carbon content, min	0.05 under	...	...	...	...
Zirconium, per cent	...	...	0.60 max[b]	0.05 over	...	...

(*c*) Grades 8, 8C, 8T, and 8F nuts shall be made by the hot-forged or cold-punching process or machined from forged or rolled bars, and should be annealed by quenching in water from a minimum temperature of 2000 F.

(*d*) When increased mechanical properties are desirable, grades 8, 8C, 8T, or 8F nuts may be machined from cold-drawn bars without being subsequently annealed by quenching in water.

Stress Relieving

4. (*a*) All nuts, excepting grades 8, 8C, 8T, and 8F made by the cold process shall be heated in the process of manufacturing to a temperature of at least 1000 F (538 C), only when specified in the order, and shall conform to the requirements as to chemical composition prescribed in Table I for the respective grades.

TABLE II.—HEAT TREATMENT AND HARDNESS REQUIREMENTS.

Grade	Sample Nut as Finished			Sample Nut after Treatment as in Section 8 (*b*)	
	Brinell Hardness	Rockwell Hardness		Brinell Hardness	Rockwell Hardness B Scale
		C Scale	B Scale		
1	120 min	.....	70 min	120 min	70 min
2	160 min	.....	84 min	160 min	84 min
2H	248 to 352	24 to 37	.....	180 min	89 min
3	248 to 352	24 to 37	.....	200 min	94 min
4	248 to 352	24 to 37	.....	200 min	94 min
6	248 to 352	24 to 37	.....	.....	.....
8, 8C, 8T, and 8F	149 min	.....	81 min	.....	.....

Chemical Composition

5. Chemical analysis of the nut materials will be furnished the purchaser only when specified in the order, and shall conform to the requirements as to chemical composition prescribed in Table I for the respective grades.

Ladle Analysis

6. (*a*) An analysis of each heat of open-hearth or electric-furnace steel shall be made to determine the percentages of carbon, manganese, phosphorus, and sulfur; also any alloying element when used.

(*b*) The analyses prescribed in Paragraph (*a*) shall be made by the manufacturer from test ingots taken during the pouring of the heats. The chemical composition thus determined shall be reported to the purchaser or his representative when specified in the order, and shall conform to the requirements specified in Section 5.

Check Analysis

7. An analysis may be made by the purchaser from a finished nut representing each heat. The phosphorus and sulfur content thus determined shall not exceed that specified in Section 5 for grades 1, 2, 2H, 3, and 4 by more than 25 per cent, and the other elements shall conform to the specified requirements.

Hardness Test

8. (*a*) Samples of each grade of nuts shall show the hardness prescribed in Table II in the finished condition.

(*b*) In addition, samples of grades 1, 2, 2H, 3, and 4 nuts shall show the hardness prescribed in Table II after they have been subjected for 24 hr to a temperature of 850 F (455 C) for grade 1, 1000 F (540 C) for grades 2 and 2H, and 1100 F (590 C) for grades 3 and 4, and then cooled slowly.

(*c*) Hardness tests shall be made as specified in Supplement III on Steel Fasteners of the Methods and Definitions For Mechanical Testing of Steel Products (ASTM Designation: A 370).

Cone Stripping Test

9. The purpose of this test is to detect the presence of detrimental defects. The use of the conical washer described in Fig. 1 exaggerates the effect of such defects by introducing a simultaneous dilation and stripping action on the nut. The test shall consist of assembling the hardened washer and the nut on a hardened stud and applying the stripping proof load specified in Table III (see Fig. 2). The nuts shall be considered acceptable if the stripping load exceeds this proof load.

TABLE III.—PROOF LOAD USING 120-DEG HARDENED STEEL CONE.[a]

Size	Threads per Inch	Mean Thread Area, sq in.	Proof Load, lb		
			Grade 1	Grade 2	Grade 2H, 3, 4, and 6
1/4	20	0.0318	3 800	4 400	5 150
5/16	18	0.0524	6 150	7 100	8 300
3/8	16	0.0775	8 950	10 300	12 000
7/16	14	0.1063	12 000	13 850	16 150
1/2	13	0.1419	15 700	18 100	21 100
9/16	12	0.182	19 650	22 700	26 500
5/8	11	0.226	23 900	27 550	32 150
3/4	10	0.334	33 650	38 850	45 300
7/8	9	0.462	44 300	51 100	59 650
1	8	0.606	55 150	63 650	74 250
1 1/8	8	0.790	68 000	78 500	91 600
1 1/4	8	1.000	81 250	93 750	109 350
1 3/8	8	1.234	94 250	108 750	126 850
1 1/2	8	1.492	106 700	123 100	143 600

[a] The proof load values are based on the following formula: conical washer proof load in pounds equals (1 — 0.30 nominal diameter of bolt) multiplied by the straight proof test load value in psi and by mean area at bolt threads. This formula cannot be used for extrapolating values for sizes beyond the range listed in this table. The straight proof test load values are: grade 1.—130,000 psi; grade 2.—150,000 psi; grade 2H, 3, 4, and 6.—175,000 psi. Mean thread area is based on $A_s = 3.1416\left(\frac{E}{2} - \frac{3H}{16}\right)^2$ where E = basic pitch diameter, H = height of sharp thread. An alternate formula giving exactly the same results is $A_s = 0.7854\left(D - \frac{0.9743}{n}\right)^2$ where D = nominal diameter of bolt, n = threads per inch.

Number of Tests

10. When so specified in the order, the purchaser's representative may select two nuts per keg for sizes 5/8 in. and smaller, one nut per keg for sizes over 5/8 in. up to and including 1 1/2 in., and one nut per every two kegs for sizes larger than 1 1/2 in., and they shall be subjected to the tests specified in Sections 8 and 9. Periodic control tests when made by the manufacturer on each lot of nuts may be considered sufficient for certification purposes in accordance with Section 15 (*c*).

Retests

11. If the results of any mechanical test do not conform to the requirements specified, two additional tests from the same lot shall be made, each of which shall conform to the requirements specified.

Finish

12. (*a*) Nuts shall be free from injurious defects and shall have a workmanlike finish.

(*b*) Nuts shall be semifinished, hexagonal in shape, and in accordance with the dimensions for the Regular or Heavy Series, as required, of the American Standard for Wrench-Head Bolts and Nuts and Wrench Openings (ASA No.: B 18.2 - 1960). Unless otherwise specified, the American Standard Heavy Series shall be used.

(*c*) Nuts for use with alloy-steel bolts or bolt studs shall be threaded, unless otherwise specified, in accordance with the American Standard for Screw Threads (ASA No.: B 1.1 - 1960), Class 2B fit, sizes 1 in. and smaller in diameter with the Coarse-Thread Series, and 1 1/8 in. and larger in diameter with the 8-Pitch-Thread Series.

Marking

13. (*a*) All nuts shall bear the manufacturer's identification mark.

(*b*) Nuts shall be legibly stamped to indicate the grade and the process of manufacture, as prescribed in Table IV.

Inspection

14. (*a*) The inspector representing the purchaser shall have free entry, at all times while work on the contract of the purchaser is being performed, to all parts of the manufacturer's works that concern the manufacture of the material ordered. The manufacturer shall afford the inspector, without charge, all reasonable facilities to satisfy him that the material is being furnished in accordance with these specifications. All tests (except check analysis) and inspection shall be made at the place of manufacture in the presence of the purchaser's representative prior to shipment, unless otherwise specified, and shall be so conducted as not to interfere unnecessarily with the operation of the works.

(*b*) The purchaser may make additional tests to govern the acceptance or rejection of the material in his own laboratory or elsewhere. Such tests, however, shall be made at the expense of the purchaser.

TABLE IV.—MARKING OF NUTS

Grade	Marking	
	Nuts Hot-Forged or Cold-Punched	Nuts Machined from Bar Stock
1	1	1B
2	2	2B
2H	2H[a]	2HB[a]
3	3	3B
4	4	4B
6	6	6B
8	8	8B
8C	8C	8CB
8T	8T	8TB
8F	8F	8FB

[a] The letter H indicates heat-treated nuts (see Sections 3 (b) and 5).

(c) *Certification.*—When agreed upon in writing between the manufacturer and the purchaser, a certification that the material conforms to the requirements specified may be the basis of acceptance of the material. Otherwise, the manufacturer shall report to the purchaser or his representative the results of the physical tests made in accordance with these specifications and, when required in the order, the chemical analysis also. In all cases, whether a certification of test or the results of the physical tests are furnished, there shall be furnished when required in the order a report giving the minimum tempering temperature for nuts of grades 2H, 3, 4, and 6.

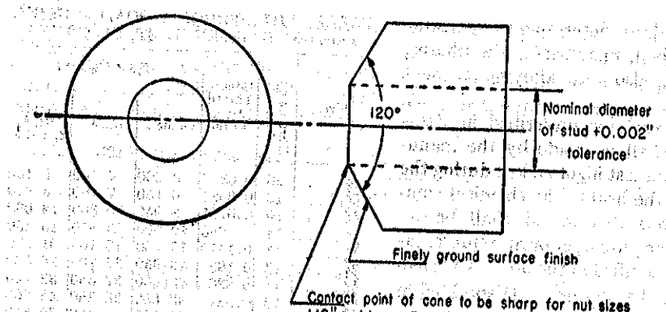

FIG. 1.—Hardened Steel Cone.

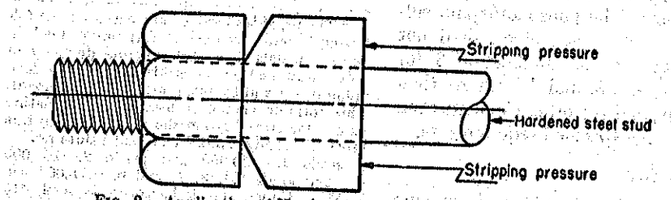

FIG. 2.—Application of Hardened Steel Cone to Testing of Nuts.

Rejection

15. Unless otherwise specified, any rejection based on tests made in accordance with Section 14 (b) shall be reported to the manufacturer within twelve working days from the receipt of samples by the purchaser.

Rehearing

16. Samples that have been rejected shall be preserved for two weeks from the date the test report is submitted to the manufacturer. In case of dissatisfaction with the results of test, the manufacturer may make claim for a rehearing within that time.

SPECIFICATION FOR CUPOLA MALLEABLE IRON

SA-197

(IDENTICAL WITH ASTM SPECIFICATION A 197-47)

Scope

1. These specifications cover malleable iron for castings made by the cupola process.

Certification

2. The manufacturer shall be prepared to certify, upon request of the purchaser, that the material conforms to the requirements of these specifications.

Process

3. The iron shall be made by the cupola process.

Manufacture Control and Records

4. The iron shall be produced under constant control of chemical composition and physical properties. Records of the chemical composition of the iron and of the physical properties of the test specimens shall be systematically made and maintained.

Primary Graphite

5. Castings shall be free from primary graphite.

Tensile Properties

6. (a) The tension test specimen specified in Section 7 shall conform to the following requirements as to tensile properties:

Tensile strength, min., psi	40 000
Yield point, min., psi	30 000
Elongation in 2 in., min., per cent	5

(b) The yield point may be determined by the drop of the beam or halt in the gage of the testing machine, or by the dividers method. When a strainometer is used in place of dividers a deformation of 0.01 in. over a gage length of 2 in. shall be regarded as indicating the yield point.

(c) The speed of the moving head of the testing machine shall not exceed ½ in. per min. after the specimen is firmly gripped.

Test Specimens

7. (a) Tension test specimens shall be of the form and dimensions shown in Fig. 1 or Fig 2. Specimens whose mean diameter at the smallest section is less than ½ in. will not be accepted for test.

(b) Two tension test specimens shall be cast from each 4 hr. of the run or fraction thereof. Patterns for tension test specimens shall have adequate risers to secure sound bars. Specimens shall be suitably marked for identification as to date, cupola, and approximate hour of pouring. Test specimens shall be annealed with castings.

Workmanship and Finish

8. The castings shall conform substantially to the patterns and shall be sound, clean, free from sand, and of workmanlike finish.

Marking

9. The castings shall be marked with the manufacturer's name or trademark. For steam service pressures in excess of 150 psi., the castings shall be marked with the manufacturer's name or trade-mark, numerals to indicate the steam service intended, and any other marks which will clearly indicate the maximum service for which the casting is intended. These identifying marks shall be located where they will not interfere with service of the castings.

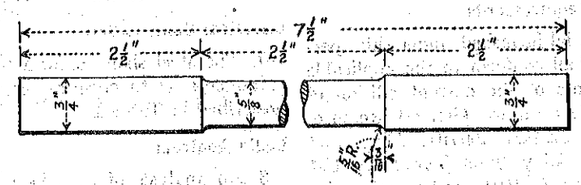

FIG. 1.—Tension Test Specimen.

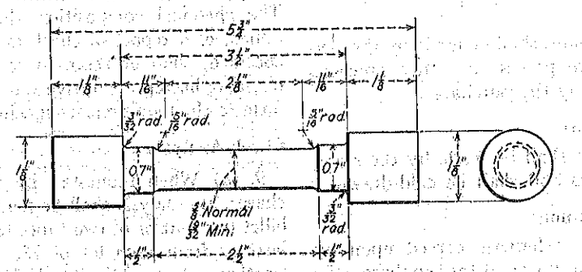

NOTE.—Modifications may be made in the dimensions indicated above for those details of the specimen outside of the gage length as required by testing procedure and equipment.

FIG. 2.—Alternative Unmachined Tension Test Specimen.

SPECIFICATION FOR SEAMLESS COLD-DRAWN INTERMEDIATE ALLOY-STEEL HEAT-EXCHANGER AND CONDENSER TUBES

SA-199

(IDENTICAL WITH ASTM SPECIFICATION A 199-61T EXCEPT FOR EDITORIAL CORRECTIONS)

Scope

1. (*a*) This specification covers several grades of chromium-molybdenum and chromium-molybdenum-silicon seamless cold-drawn intermediate alloy steel tubes for heat exchangers, condensers, and similar heat transfer apparatus.

(*b*) This specification covers tubes ⅛ to 3 in., incl, in outside diameter.

(*c*) The purchaser shall specify in the order the outside diameter, minimum wall thickness, and grade desired. The inside diameter shall not be specified.

NOTE.—Tubing smaller in outside diameter and having a thinner wall than indicated in this specification is available. These smaller sizes may require different mechanical and manipulating tests which should be a matter of agreement between the manufacturer and the purchaser.

General Requirements

2. Material furnished under this specification shall conform to the applicable requirements of the current edition of the Specification for General Requirements for Carbon, Ferritic Alloy, and Austenitic Alloy Steel Tubes (ASTM Designation: A 450), unless otherwise provided herein.

Process

3. The steel shall be made by the electric-furnace process or other processes approved by the purchaser.

Manufacture

4. Tubes shall be made by the seamless process and shall be cold-drawn.

Heat Treatment

5. Unless otherwise agreed upon by the manufacturer and the purchaser, the tubes may be given such heat treatment as is considered desirable by the manufacturer to conform to the requirements of this specification.

TABLE I.—CHEMICAL REQUIREMENTS.

Grade	Carbon, max, per cent	Manganese, per cent	Phosphorus, max, per cent	Sulfur, max, per cent	Silicon, per cent	Chromium, per cent	Molybdenum, per cent
T 3b	0.15	0.30 to 0.60	0.030	0.030	0.50 max	1.65 to 2.35	0.44 to 0.65
T 4	0.15	0.30 to 0.60	0.030	0.030	0.50 to 1.00	2.15 to 2.85	0.44 to 0.65
T 5	0.15	0.30 to 0.60	0.030	0.030	0.50 max	4.00 to 6.00	0.45 to 0.65
T 7	0.15	0.30 to 0.60	0.030	0.030	0.50 to 1.00	6.00 to 8.00	0.45 to 0.65
T 9	0.15	0.30 to 0.60	0.030	0.030	0.25 to 1.00	8.00 to 10.00	0.90 to 1.10
T 11	0.15	0.30 to 0.60	0.030	0.030	0.50 to 1.00	1.00 to 1.50	0.44 to 0.65
T 21	0.15	0.30 to 0.60	0.030	0.030	0.50 max	2.65 to 3.35	0.80 to 1.06
T 22	0.15	0.30 to 0.60	0.030	0.030	0.50 max	1.90 to 2.60	0.87 to 1.13

Surface Condition

6. The tubes shall be free from scale. A slight amount of oxidation will not be considered as scale.

Chemical Composition

7. The steel shall conform to the requirements as to chemical composition prescribed in Table I.

Ladle Analysis

8. An analysis of each heat shall be made by the manufacturer to determine the percentage of the elements specified. The chemical composition thus determined, or a report of check analysis, as specified, shall be reported to the purchaser or his representative and shall conform to the requirements specified.

Check Analysis

9. (*a*) When requested by the purchaser, an analysis shall be made of one billet per heat or of two tubes from each heat or from each lot of 250 tubes or fraction thereof. The chemical composition thus determined shall conform to the requirements specified.

(*b*) If the analysis of one of these test specimens does not conform to the requirements specified, an analysis of two billets from the same heat or an analysis of two tubes from the same lot may be made, each of which shall conform to the requirements specified.

Tensile Properties

10. The material shall conform to the requirements as to tensile properties prescribed in Table II.

Hardness Requirements

11. The tubes fabricated from Grades T3b, T4, T5, T11, T21, and T22, shall have a Rockwell hardness number not exceeding B85. For tubes fabricated from grades T7 and T9 the maximum Rockwell hardness number shall be B89.

Mechanical Tests Required

12. (*a*) *Tension Test.*—One tension test shall be made on a specimen from one tube from each group of 100 finished tubes or fraction thereof.

(*b*) *Flattening Test.*—One flattening test shall be made on specimens from each of two tubes from each heat-treated lot.[4]

(*c*) *Flaring Test.*—One flaring test shall be made on specimens from each of two tubes from each heat-treated lot.[4]

(*d*) *Flange Test.*—When specified as a substitute for the flaring test, for tubes having a wall thickness (actual mean wall) less than 10 per cent of the outside diameter, one test shall be made on specimens from each of two tubes from each heat-treated lot.[4] For tubes other than specified in Section 12(*c*) the flange test shall not be required.

(*e*) *Hardness Test.*—One Rockwell hardness determination shall be made on 5 per cent of all tubes.

(*f*) *Hydrostatic Test.*—Each tube shall be subjected to the hydrostatic pressure test.

Finish

13. Finished tubes shall be reasonably straight and have smooth ends free from burrs. They shall be free from injurious defects and shall have a workmanlike finish. Minor defects may be removed by grinding, provided the wall thickness is not decreased to less than that permitted in Table V of Specifications A 450.

Marking

14. In addition to the marking prescribed in Specification A 450, the marking shall include the name and order number of the purchaser.

[4] The term "lot" applies to all tubes of the same nominal size and wall thickness (or schedule) which are produced from the same heat of steel and subjected to the same finishing treatment in a continuous furnace; when final heat treatment is in a batch type furnace, the lot shall include only those tubes which are heat treated in the same furnace charge. When no heat treatment is performed following final forming operations, the lot shall include hot-rolled material only or cold-drawn material only.

TABLE II.—TENSILE REQUIREMENTS.[a]

Tensile strength, min, psi	60 000
Yield point, min, psi	25 000
Elongation in 2 in., min, per cent	30
For longitudinal strip tests the width of the gage section shall be 1 in. and a deduction for each 1/32-in. decrease in wall thickness below 5/16 in. from the basic minimum elongation of the following percentage	1.50[b]

[a] Not applicable to tubes having wall thicknesses below 0.015 in. Tensile properties of such thin wall tubes shall be a matter of agreement between the manufacturer and the purchaser.

[b] The following table gives the computed minimum values:

Wall Thickness, in.	Elongation in 2 in., min, per cent
5/16 (0.312)	30.00
9/32 (0.281)	28.50
1/4 (0.250)	27.00
7/32 (0.219)	25.50
3/16 (0.188)	24.00
5/32 (0.156)	22.50
1/8 (0.125)	21.00
3/32 (0.094)	19.50
1/16 (0.062)	18.00

NOTE.—The above table gives the computed minimum elongation values for each 1/32-in. decrease in wall thickness. Where the wall thickness lies between two values shown above, the minimum elongation value shall be determined by the following formula:

$$E = 48t + 15.00$$

where:

E = elongation in 2 in. in per cent, and

t = actual thickness of specimen, in inches.

SPECIFICATION FOR CARBON-SILICON STEEL PLATES OF INTERMEDIATE TENSILE RANGES FOR FUSION-WELDED BOILERS AND OTHER PRESSURE VESSELS

SA-201

(IDENTICAL WITH ASTM SPECIFICATION A 201-61T)

Scope

1. This specification covers carbon-silicon steel plates, in two intermediate tensile strength ranges designated grades A and B, intended particularly for fusion welding; for use in locomotive boiler shells, boilers for stationary service and other pressure vessels. The maximum thickness of flange quality plates to be specified under this specification shall be 2 in.; of firebox quality plates of grade A shall be 12 in.; and of grade B shall be 8 in. Welding technique is of fundamental importance and it is presupposed that welding procedure will be in accordance with approved methods.

General Conditions for Delivery

2. Material furnished under this specification shall conform to the applicable requirements of the current edition of the Specification for General Requirements for Delivery of Rolled Steel Plates of Flange and Firebox Qualities (ASTM Designation: A 20).

Process

3. The steel shall be made by either or both of the following processes: open-hearth or electric-furnace.

Heat Treatment

4. (*a*) Plates over 2 in. in thickness shall be treated to produce grain refinement either by normalizing or heating uniformly for hot forming. If the required treatment is to be obtained in conjunction with the hot-forming operation, the temperature to which the plates are heated for hot forming shall be equivalent to and shall not significantly exceed the normalizing temperature. If the treatment of the plates is not specified to be done at the plate manufacturer's plant, the testing shall be carried out in accordance with Paragraph (*b*).

(*b*) When a fabricator is equipped and elects to perform the required normalizing or fabricates by hot forming as provided in Paragraph (*a*), the plates shall be accepted on the basis of mill tests made on specimens heat treated in accordance with the purchaser's order requirements. If the heat treatment temperatures are not indicated on the purchase order, the plate manufacturer shall heat treat the specimens under conditions he considers appropriate for grain refinement, and to meet the test requirements. The plate manufacturer shall inform the fabricator of the procedure followed in treating the specimens at the mill.

(*c*) The purchaser shall indicate in his orders to the plate manufacturer whether the rolling mill or the fabricator shall perform the treatment of the plates.

(*d*) When the plates are to be normalized at the plate manufacturer's plant, the mechanical properties shall be determined on specimens simultaneously treated with the plates.

TABLE I.—CHEMICAL REQUIREMENTS[b, c]

	Grade A	Grade B
Carbon, max, per cent:		
For plates 1 in. and under in thickness	0.20	0.24
For plates over 1 to 2 in., incl, in thickness	0.24	0.27
For plates over 2 to 4 in., incl, in thickness	0.27	0.30
For plates over 4 to 8 in., incl, in thickness	0.31	0.35
For plates over 8 to 12 in., incl, in thickness	0.35	...
Manganese, max, per cent	0.80[a]	0.80[a]
Phosphorus, max, per cent:		
Flange	0.04	0.04
Firebox	0.035	0.035
Sulfur, max, per cent:		
Flange	0.05	0.05
Firebox	0.04	0.04
Silicon, per cent:		
Ladle analysis	0.15 to 0.30	0.15 to 0.30
Check analysis	0.13 to 0.33	0.13 to 0.33

[a] When steel plates are furnished under this specification to meet the impact test requirements of the Specification for Steel Plates for Pressure Vessels for Service at Low Temperatures (ASTM Designation: A 300), the manganese content shall be 0.85 to 1.20 per cent.

[b] When specified, the maximum incidental copper content shall be 0.25 per cent.

[c] When specified, the steel shall be coarse grained having a carburized austenite grain size of 1 to 5 as determined in accordance with the Method for Estimating the Average Grain Size of Metals (ASTM Designation: E 112), and its Plate IV, by carburizing at 1700 F for 8 hr.

TABLE II.—TENSILE REQUIREMENTS.

	Grade A	Grade B
Tensile strength, psi	55 000 to 65 000	60 000 to 72 000
Yield point, min, psi	30 000	32 000
Elongation in 8 in., min, per cent:		
Flange	24[a]	22[a]
Firebox	25[a]	22[a]
Elongation in 2 in., min, per cent:		
Flange	28	25
Firebox	29[b]	26[b]

[a] See Section 6(*c*) and (*d*).
[b] See Section 6(*e*).

prescribed in Table I.

Tensile Properties

6. (*a*) The material as represented by the tension test specimens shall conform to the requirements as to tensile properties prescribed in Table II.

(*b*) Tensile strength only need be determined on the tension test specimen taken from the top of firebox plates, and it shall not exceed 67,000 psi for grade A, nor 74,000 psi for grade B.

(*c*) For material under $\frac{5}{16}$ in. in thickness, a deduction from the percentage of elongation in 8 in. specified in Table II of 1.25 per cent shall be made for each decrease of $\frac{1}{32}$ in. of the specified thickness below $\frac{5}{16}$ in.

(*d*) For material over $\frac{3}{4}$ in. in thickness, a deduction from the percentage of elongation in 8 in. specified in Table II of 0.5 per cent shall be made for each increase of $\frac{1}{8}$ in. of the specified thickness above $\frac{3}{4}$ in. This deduction shall not exceed 3 per cent.

(*e*) For material over $3\frac{1}{2}$ in. in thickness, a deduction from the percentage of elongation in 2 in. specified in Table II of 0.5 per cent shall be made for each increase of $\frac{1}{2}$ in. of the specified thickness above $3\frac{1}{2}$ in. This deduction shall not exceed 3 per cent.

TABLE III.—BEND DIAMETER.

Thickness of Material, in.	Ratio of Bend Diameter to Thickness of Specimen	
	Grade A	Grade B
1 and under	½	1
Over 1 to 1½, incl	1	1½
Over 1½ to 3, incl	1½	2
Over 3 to 4, incl	2	2½
Over 4 to 6, incl	2½	3
Over 6 to 9, incl	3	3½
Over 9 to 12, incl	3½	...

Bending Properties

7. The bend test specimen shall stand being bent cold through 180 deg without cracking on the outside of the bent portion to an inside diameter which shall have the relation to the thickness of the specimen prescribed in Table III. When the test is made on a specimen reduced in thickness, the rolled surface shall be on the outer curve of the bend.

Test Specimens

8. (*a*) For plates 2 in. and under in thickness the test specimens shall be prepared for testing from the material in its rolled condition.

(*b*) For plates over 2 in. in thickness the test specimens shall be prepared from the material in its heat-treated condition, or from full thickness samples similarly and simultaneously treated (see Section 4).

(*c*) When so specified in the purchase order with the mill, test specimens representing the plates shall be stress-relieved by gradually and uniformly heating them to a temperature between 1100 and 1200 F (or a temperature range otherwise agreed upon between the manufacturer and the fabricator), holding at temperature for at least 1 hr per inch of thickness and cooling in still atmosphere to a temperature not exceeding 600 F

Number of Tests

9. Two tension tests, one bend test and one homogeneity test shall be made from each firebox steel plate as rolled. One tension test and one bend test shall be made from each flange steel plate as rolled.

NOTE.—The term "plate as rolled" used here refers to the unit plate rolled from a slab, or directly from an ingot in its relation to the location and number of specimens; not to its condition.

Chemical Composition

5. The steel shall conform to the requirements as to chemical composition

SPECIFICATION FOR CHROME-MANGANESE-SILICON (CMS) ALLOY-STEEL PLATES FOR BOILERS AND OTHER PRESSURE VESSELS

SA-202

(IDENTICAL WITH ASTM SPECIFICATION A 202-56)

Scope

1. This specification covers chromium-manganese-silicon alloy steel plates (CMS) in two high tensile strength ranges, designated grades A and B; up to 2 in., inclusive, in thickness; of firebox quality; for use in boilers and other pressure vessels. Grade A is a ductile material of maximum workability and grade B a high tensile material with sufficient ductility to be workable without heating. Grade A is suitable for rivets and when so used the bars shall be subject to the requirements for rolled bars specified in the Tentative Specifications for Boiler Rivet Steel and Rivets (ASTM Designation: A 31), except the chemical and mechanical properties.

General Conditions for Delivery

2. Material furnished under this specification shall conform to the applicable requirements of the current edition of the Tentative Specification for General Requirements for Delivery of Rolled Steel Plates of Flange and Firebox Qualities (ASTM Designation: A 20).

Process

3. The steel shall be made by either or both of the following processes: open-hearth or electric-furnace.

Chemical Composition

4. The steel shall conform to the requirements as to chemical composition prescribed in Table I.

Tensile Properties

5. (*a*) The material as represented by test specimens shall conform to the requirements as to tensile properties prescribed in Table II.

(*b*) Tensile strength only need be determined on the tension test specimen taken from the top of firebox plates, and it shall not exceed 92,000 psi. for grade A, nor 102,000 psi. for grade B.

(*c*) For material under $\frac{5}{16}$ in. in thickness, a deduction from the percentage of elongation in 8 in. specified in Table II of 1.25 per cent shall be made for each decrease of $\frac{1}{32}$ in. of the specified thickness below $\frac{5}{16}$ in.

TABLE I.—CHEMICAL REQUIREMENTS.

	Grade A	Grade B
Carbon, max, per cent	0.17	0.25
Manganese, per cent:		
Ladle analysis	1.05 to 1.40	1.05 to 1.40
Check analysis	1.00 to 1.45	1.00 to 1.45
Phosphorus, max, per cent	0.035	0.035
Sulfur, max, per cent	0.04	0.04
Silicon, per cent:		
Ladle analysis	0.60 to 0.90	0.60 to 0.90
Check analysis	0.54 to 0.96	0.54 to 0.96
Chromium, per cent:		
Ladle analysis	0.35 to 0.60	0.35 to 0.60
Check analysis	0.31 to 0.64	0.31 to 0.64

TABLE II.—TENSILE REQUIREMENTS.

	Grade A	Grade B
Tensile strength, psi	75 000 to 90 000	85 000 to 100 000
Yield point, min, psi	45 000	47 000
Elongation in 8 in., min, per cent	18[a]	17[a]
Elongation in 2 in., min, per cent	21	20

[a] See Section 5 (*c*), (*d*), and (*e*).

(*d*) For plates over $\frac{3}{4}$ to $\frac{7}{8}$ in., inclusive, in thickness, if the percentage of elongation of an 8-in. gage length test specimen falls not more than 3 per cent below the amount prescribed in Table II, the elongation shall be considered satisfactory provided the percentage of elongation in 2 in. across the break is not less than 25 per cent.

NOTE.—A characteristic of certain types of alloy steels is a local disproportionate increase in the degree of necking down or contraction of the specimens under tension test; resulting in a decrease in the percentage of elongation as the gage length is increased. The effect is not so pronounced in the thicker plates.

(*e*) For material over $\frac{3}{4}$ in. in thickness, a deduction from the percentage of elongation in 8 in. specified in Table II of 0.5 per cent shall be made for each increase of $\frac{1}{8}$ in. of the specified thickness above $\frac{3}{4}$ in. This deduction shall not exceed 3 per cent.

TABLE III.—BEND DIAMETERS.

Thickness of Material, in.	Ratio of Bend Diameter to Thickness of Specimen	
	Grade A	Grade B
1 and under	2	2½
Over 1 to 1½, incl.	2½	3
Over 1½ to 2, incl.	3	3½

Bending Properties

6. The bend test specimen shall stand being bent cold through 180 deg. without cracking on the outside of the bent portion to an inside diameter which shall have the relation to the thickness of the specimen prescribed in Table III.

Test Specimens

7. (*a*) Test specimens shall be prepared for testing from material in its rolled condition.

(*b*) When so specified in the purchase order with the mill, test specimens representing the plates shall be stress-relieved by gradually and uniformly heating them to a temperature between 1100 and 1200 F. (or a temperature range otherwise agreed upon between the manufacturer and the fabricator), holding at temperature for at least 1 hr. per inch of thickness and cooling in still atmosphere to a temperature not exceeding 600 F.

Number of Tests

8. Two tension tests, one bend test and one homogeneity test shall be made from each plate as rolled.

NOTE.—The term "plate as rolled" used here refers to the unit plate rolled from a slab or directly from an ingot in its relation to the location and number of specimens; not to its condition.

Marking

9. As provided in ASTM Specification A 20, each plate shall be legibly stamped or stenciled, depending on ordered thickness, with the letters "CMS" in addition to the regular markings.

SPECIFICATION FOR NICKEL-STEEL PLATES FOR BOILERS AND OTHER PRESSURE VESSELS

SA-203

(IDENTICAL WITH ASTM SPECIFICATION A 203-61)

Scope

1. This specification covers nickel steel plates in two tensile strength ranges, designated grades A and D, and B and E, intended primarily for fusion welding; for use in boiler shells and other pressure vessels. The maximum thickness of flange quality plates to be specified under this specification shall be 2 in. for all grades; the maximum thickness of firebox quality plates of grades A and B shall be 6 in., and of grades D and E 4 in. Welding technique is of fundamental importance and it is presupposed that welding procedure will be in accordance with approved methods for this class of material.

General Conditions for Delivery

2. Material furnished under this specification shall conform to the applicable requirements of the current edition of the Specification for General Requirements for Delivery of Rolled Steel Plates of Flange and Firebox Qualities (ASTM Designation: A 20).

Process

3. The steel shall be made by either or both of the following processes: open hearth or electric furnace.

Heat Treatment

4. (*a*) Plates over 2 in. in thickness shall be treated to produce grain refinement either by normalizing or heating uniformly for hot forming. If the required treatment is to be obtained in conjunction with the hot forming operation, the temperature to which the plates are heated for hot forming shall be equivalent to and shall not significantly exceed the normalizing temperature. If the treatment of the plates is not specified to be done at the plate manufacturer's plant, the testing shall be carried out in accordance with Paragraph (*b*).

(*b*) When a fabricator is equipped and elects to perform the required normalizing or fabricates by hot forming as provided in Paragraph (*a*), the plates shall be accepted on the basis of mill tests made on specimens heat treated in accordance with the purchaser's order requirements. If the heat treatment temperatures are not indicated on the purchase order, the plate manufacturer shall heat treat the specimens under conditions he considers appropriate for grain refinement, and to meet the test requirements. The plate manufacturer shall inform the fabricator of the procedure followed in treating the specimens at the mill.

TABLE I.—CHEMICAL REQUIREMENTS.

	Covering Plates up to 6 in., incl, in Thickness		Covering Plates up to 4 in., incl, in Thickness	
	Grade A	Grade B	Grade D	Grade E
Carbon, max, per cent:				
Up to 2 in., incl, in thickness	0.17	0.21	0.17	0.20
Over 2 to 4 in., incl, in thickness	0.20	0.24	0.20	0.23
Over 4 to 6 in., incl, in in thickness	0.23	0.25	...	...
Manganese, max, per cent:				
Up to 2 in., incl, in thickness	0.70	0.70	0.70	0.70
Over 2 to 4 in., incl, in thickness	0.80	0.80	0.80	0.80
Over 4 to 6 in., incl, in thickness	0.80	0.80	...	...
Phosphorus, max, per cent:				
Flange	0.04	0.04	0.04	0.04
Firebox	0.035	0.035	0.035	0.035
Sulfur, max, per cent:				
Flange	0.05	0.05	0.05	0.05
Firebox	0.04	0.04	0.04	0.04
Silicon, per cent:				
Ladle analysis	0.15 to 0.30	0.15 to 0.30	0.15 to 0.30	0.15 to 0.30
Check analysis	0.13 to 0.32	0.13 to 0.32	0.13 to 0.32	0.13 to 0.32
Nickel, per cent:				
Ladle analysis	2.10 to 2.50	2.10 to 2.50	3.25 to 3.75	3.25 to 3.75
Check analysis	2.03 to 2.57	2.03 to 2.57	3.18 to 3.82	3.18 to 3.82

TABLE II.—TENSILE REQUIREMENTS.

	Grades A and D	Grades B and E
Tensile strength, psi	65 000 to 77 000	70 000 to 85 000
Yield point, min, psi	37 000	40 000
Elongation in 8 in., min per cent	21[a]	19[a]
Elongation in 2 in., min, per cent:		
Flange	24	22
Firebox	25[b]	23[b]

[a] See Section 6(*c*), (*d*), and (*e*).
[b] See Section 6(*f*).

(*c*) The purchaser shall indicate in his orders to the plate manufacturer whether the rolling mill or the fabricator shall perform the required treatment of the plates.

(*d*) When the plates are to be normalized at the plate manufacturer's plant, the mechanical properties shall be determined on specimens simultaneously treated with the plates.

(*e*) Plates 2 in. and under in thickness will be tested and supplied in the as-rolled condition except, when agreed upon between the manufacturer and the purchaser, plates 2 in. and under may be furnished stress relieved, normalized, or normalized and stress relieved.

Chemical Composition

5. The steel shall conform to the requirements as to chemical composition prescribed in Table I.

Tensile Properties

6. (*a*) The material as represented by the tension test specimens shall conform to the requirements as to tensile properties prescribed in Table II.

(*b*) Tensile strength only need be determined on the tension test specimen taken from the top of firebox plates, and it shall not exceed 80,000 psi for grades A and D, nor 88,000 psi for grades B and E.

(*c*) For material under $\frac{5}{16}$ in. in thickness, a deduction from the percentage of elongation in 8 in. specified in Table II of 1.25 per cent shall be made for each decrease of $\frac{1}{32}$ in. of the specified thickness below $\frac{5}{16}$ in.

(*d*) For plates over $\frac{1}{2}$ to $\frac{3}{4}$ in., inclusive, in thickness, if the percentage of elongation of an 8-in. gage length test specimen falls not more than 3 per cent below the amount prescribed in Table II, the elongation shall be considered satisfactory provided the percentage of elongation in 2 in. across the break is not less than 25 per cent.

NOTE 1.—A characteristic of certain types of alloy steels is a local disproportionate increase in the degree of necking down or contraction of the specimens under tension test; resulting in a decrease in the percentage of elongation as the gage length is increased. The effect is not so pronounced in the thicker plates.

(*e*) For material over $\frac{3}{4}$ in. in thickness, a deduction from the percentage of elongation in 8 in. specified in Table II of 0.5 per cent shall be made for each increase of $\frac{1}{8}$ in. of the specified thickness above $\frac{3}{4}$ in. This deduction shall not exceed 3 per cent.

(*f*) For material over $3\frac{1}{2}$ in. in thickness, a deduction from the percentage of elongation in 2 in. specified in Table II of 0.5 per cent shall be made for each increase of $\frac{1}{2}$ in. of the specified thickness above $3\frac{1}{2}$ in. This deduction shall not exceed 3 per cent.

Bending Properties

7. The bend test specimen shall stand being bent cold (room temperature) through 180 deg without cracking on the outside of the bent portion to an inside diameter which shall have the relation to the thickness of the specimen prescribed in Table III. When the test is made on a specimen reduced in thickness, the rolled surface shall be on the outer curve of the bend.

TABLE III.—BEND DIAMETERS.

Thickness of Material, in.	Ratio of Bend Diameter to Thickness of Specimen			
	Grade A	Grade B	Grade D	Grade E
1 and under	1	1½	1	1½
Over 1 to 2, incl	1½	2	1½	2
Over 2 to 4, incl	1½	2	1½	2
Over 4 to 6, incl	2	2½	...	...

Test Specimens

8. (*a*) For plates 2 in. and under in thickness, the test specimens shall be prepared for testing from the material in its rolled condition, or as otherwise specified.

(*b*) For plates over 2 in. in thickness the test specimens shall be prepared from the material in its heat-treated condition, or from full thickness samples similarly and simultaneously treated, except as permitted in Section 4.

(*c*) When so specified on the purchase order with the mill, test specimens representing the plates shall be stress-relieved by gradually and uniformly heating them to a temperature between 1100 and 1200 F (or a temperature range otherwise agreed upon between the manufacturer and the fabricator), holding at temperature for at least 1 hr per inch of thickness and cooling in still atmosphere to a temperature not exceeding 600 F.

Number of Tests

9. Two tension tests, one bend test and one homogeneity test shall be made from each firebox steel plate as rolled. One tension test and one bend test shall be made from each flange steel plate as rolled.

NOTE 2.—The term "plate as rolled" used here refers to the unit plate rolled from a slab or directly from an ingot in its relation to the location and number of specimens, not to its condition.

Marking

10. As provided in ASTM Specification A 20, each plate shall be legibly stamped or stenciled depending on ordered thickness with the letters "NI" in addition to the regular markings.

SPECIFICATION FOR MOLYBDENUM-STEEL PLATES FOR BOILERS AND OTHER PRESSURE VESSELS

SA-204

(IDENTICAL WITH ASTM SPECIFICATION A 204-61)

Scope

1. This specification covers molybdenum-steel plates, in three high tensile strength ranges, designated grades A, B, and C, intended particularly for fusion welding; for use in locomotive boiler shells, boilers for stationary service and other pressure vessels. The maximum thickness of flange quality plates to be specified under this specification shall be 2 in.; of grades A and B firebox quality, 6 in.; of grade C firebox quality, 4 in. Welding technique is of fundamental importance and it is presupposed that welding procedure will be in accordance with approved methods.

General Conditions for Delivery

2. Material furnished under this specification shall conform to the applicable requirements of the current edition of the Specification for General Requirements for Delivery of Rolled Steel Plates of Flange and Firebox Qualities (ASTM Designation: A 20).

Process

3. The steel shall be made by either or both of the following processes: open-hearth or electric-furnace.

Heat Treatment

4. (*a*) Plates over 2 in. in thickness shall be treated to produce grain refinement either by normalizing or heating uniformly for hot forming. If the required treatment is to be obtained in conjunction with the hot forming operation, the temperature to which the plates are heated for hot forming shall be equivalent to and shall not significantly exceed the normalizing temperature. If the treatment of the plates is not specified to be done at the plate manufacturer's plant, the testing shall be carried out in accordance with Paragraph (*b*).

(*b*) When a fabricator is equipped and elects to perform the required normalizing or fabricates by hot forming as provided in Paragraph (*a*), the plates shall be accepted on the basis of mill tests made on specimens heat treated in accordance with the purchaser's order requirements. If the heat treatment temperatures are not indicated on the purchase order, the plate manufacturer shall heat treat the specimens under conditions he considers appropriate for grain refinement, and to meet the test requirements. The plate manufacturer shall inform the fabricator of the procedure followed in treating the specimens at the mill.

(*c*) The purchaser shall indicate in his orders to the plate manufacturer whether the rolling mill or the fabricator shall perform the required treatment of the plates.

(*d*) When the plates are to be normalized at the plate manufacturer's plant, the mechanical properties shall be determined on specimens simultaneously treated with the plates.

(*e*) Plates 2 in. and under in thickness will be tested and supplied in the as-rolled condition except, when agreed upon between the manufacturer and the purchaser, plates 2 in. and under may be furnished stress relieved, normalized, or normalized and stress relieved.

Chemical Composition

5. The steel shall conform to the requirements as to chemical composition prescribed in Table I.

Tensile Properties

6. (*a*) The material as represented by the tension test specimens shall conform to the requirements as to tensile properties prescribed in Table II.

(*b*) Tensile strength only need be determined on the tension test specimen taken from the top of firebox plates, and it shall not exceed 80,000 psi for grade A, 88,000 psi for grade B, nor 93,000 psi for grade C.

(*c*) For material under $\frac{5}{16}$ in. in thickness, a deduction from the percentage of elongation in 8 in. specified in Table II of 1.25 per cent shall be made for each decrease of $\frac{1}{32}$ in. of the specified thickness below $\frac{5}{16}$ in.

(*d*) For plates over $\frac{1}{4}$ to $\frac{3}{4}$ in., inclusive, in thickness, if the percentage of elongation of an 8-in. gage length test specimen falls not more than 3 per cent below the amount prescribed in Table II, the elongation shall be considered satisfactory provided the percentage of elongation in 2 in. across the break is not less than 25 per cent.

NOTE.—A characteristic of certain types of alloy steels is a local disproportionate increase in the degree of necking down or contraction of the specimens under tension test; resulting in a decrease in the percentage of elongation as the gage length is increased. The effect is not so pronounced in the thicker plate.

(*e*) For material over $\frac{3}{4}$ in. in thickness, a deduction from the percentage of elongation in 8 in. specified in Table II of 0.5 per cent shall be made for each increase of $\frac{1}{8}$ in. of the specified thickness above $\frac{3}{4}$ in. This deduction shall not exceed 3 per cent.

TABLE III.—BEND DIAMETERS.

Thickness of Material, in.	Ratio of Bend Diameter to Thickness of Specimen		
	Grade A	Grade B	Grade C
1 and under	1	1½	2
Over 1 to 2, incl.	1½	2	2½
Over 2 to 4, incl.	1½	2	3
Over 4 to 6, incl.	2	2½	...

(*f*) For material over 3½ in. in thickness, a deduction from the percentage of elongation in 2 in. specified in Table II of 0.5 per cent shall be made for each increase of ½ in. of the specified thickness above 3½ in. This deduction shall not exceed 3 per cent.

Bending Properties

7. The bend test specimen shall stand being bent cold through 180 deg without cracking on the outside of the bent portion through an inside diameter which shall have the relation to the thickness of the specimen as prescribed in Table III. When the test is made on a specimen reduced in thickness, the rolled surface shall be on the outer curve of the bend.

Test Specimens

8. (*a*) For plates 2 in. and under in thickness the test specimens shall be prepared for testing from the material in its rolled condition.

(*b*) For plates over 2 in. in thickness the test specimens shall be prepared from the material in its heat-treated condition, or from full thickness samples similarly and simultaneously treated (See Section 4).

(*c*) When so specified on the purchase order with the mill, test specimens representing the plates shall be stress-relieved by gradually and uniformly heating them to a temperature between 1100 and 1200 F (or a temperature range otherwise agreed upon between the manufacturer and the fabricator), holding at temperature for at least 1 hr per inch of thickness and cooling in still atmosphere to a temperature not exceeding 600 F.

TABLE I.—CHEMICAL REQUIREMENTS.[a]

	Plates up to 6 in., incl, in Thickness		Plates up to 4 in., incl, in Thickness
	Grade A	Grade B	Grade C
Carbon, max, per cent:			
For plates 1 in. and under in thickness	0.18	0.20	0.23
For plates over 1 to 2 in., incl, in thickness	0.21	0.23	0.26
For plates over 2 to 4 in., incl, in thickness	0.23	0.25	0.28
For plates over 4 to 6 in., incl, in thickness	0.25	0.27	....
Manganese, max, per cent	0.90	0.90	0.90
Phosphorus, max, per cent:			
Flange	0.04	0.04	0.04
Firebox	0.035	0.035	0.035
Sulfur, max, per cent:			
Flange	0.05	0.05	0.05
Firebox	0.04	0.04	0.04
Silicon, per cent:			
Ladle analysis	0.15 to 0.30	0.15 to 0.30	0.15 to 0.30
Check analysis	0.13 to 0.32	0.13 to 0.32	0.13 to 0.32
Molybdenum, per cent:			
Ladle analysis	0.45 to 0.60	0.45 to 0.60	0.45 to 0.60
Check analysis	0.41 to 0.64	0.41 to 0.64	0.41 to 0.64

[a] When specified, the steel shall be coarse grained having a carburized austenitic grain size of 1 to 5 as determined in accordance with the Method for Estimating the Average Grain Size of Metals (ASTM Designation: E 112) and its Plate IV, by carburizing at 1700 F for 8 hr.

TABLE II.—TENSILE REQUIREMENTS.

	Grade A	Grade B	Grade C
Tensile strength, psi	65 000 to 77 000	70 000 to 85 000	75 000 to 90 000
Yield point, min, psi	37 000	40 000	43 000
Elongation in 8 in., min, per cent	21[a]	19[a]	18[a]
Elongation in 2 in., min, per cent:			
Flange	24	22	21
Firebox	25[b]	23[b]	22[b]

[a] See Section 6(*c*), (*d*), and (*e*).
[b] See Section 6(*f*).

Number of Tests

9. Two tension tests, one bend test and one homogeneity test shall be made from each firebox steel plate as rolled. One tension test and one bend test shall be made from each flange steel plate as rolled.

NOTE.—The term "plate as rolled" used here refers to the unit plate rolled from a slab or directly from an ingot in its relation to the location and number of specimens, not to its condition.

Marking

10. As provided in ASTM Specification A 20, each plate shall be legibly stamped or stenciled depending on ordered thickness with the letters "MO" in addition to the regular markings.

SPECIFICATION FOR SEAMLESS CARBON-MOLYBDENUM ALLOY-STEEL BOILER AND SUPERHEATER TUBES

SA-209

(IDENTICAL WITH ASTM SPECIFICATION A 209-61T EXCEPT FOR EDITORIAL CORRECTIONS)

Scope

1. (*a*) This specification covers several grades of seamless carbon-molybdenum alloy steel boiler and superheater tubes.

(*b*) This specification covers tubes ½ to 5 in., inclusive, in outside diameter and 0.035 to 0.500 in., inclusive, in minimum wall thickness.

(*c*) The purchaser shall specify in the order the outside diameter, minimum wall thickness, and grade desired. The inside diameter shall not be specified.

General Requirements

2. Material furnished under this specification shall conform to the applicable requirements of the current edition of the Specification for General Requirements for Carbon, Ferritic Alloy, and Austenitic Alloy Steel Tubes (ASTM Designation: A 450), unless otherwise provided herein.

Process

3. The steel shall be a killed steel made by either or both of the following processes: open hearth or electric furnace.

Manufacture

4. Tubes shall be made by the seamless process and shall be either hot-finished or cold-drawn, as specified.

Heat Treatment

5. Hot-finished tubes shall be annealed or normalized and tempered. Cold-drawn tubes shall be annealed after the final pass.

Surface Condition

6. If pickling or shot blasting, or both, are required, this shall be specifically stated in the order and shall be done at the purchaser's expense.

Chemical Composition

7. The steel shall conform to the requirements as to chemical composition prescribed in Table I.

Ladle Analysis

8. An analysis of each heat shall be made to determine the percentages of the elements specified. The chemical composition thus determined, or a report of check analysis as specified, shall be reported to the purchaser or his representative and shall conform to the requirements specified.

Check Analysis

9. (*a*) At the request of the purchaser, an analysis shall be made by the manufacturer of one billet from each heat or the number of tubes selected as specified in Table II, and shall conform to the requirements specified.

(*b*) If the analysis of one of these test specimens does not conform to the requirements specified, an analysis of two billets from the same heat or an analysis of two tubes from the same lot may be made, each of which shall conform to the requirements specified.

Tensile Properties

10. The material shall conform to the requirements as to tensile properties prescribed in Table III.

TABLE II.—NUMBER OF SAMPLES REQUIRED FOR CHECK ANALYSIS.

Size of Tube	Number of Samples Selected
2 in. and over in diameter and 0.200 in. and over in wall thickness	2 from each lot of 100 tubes or fraction thereof
Less than 2 in. in diameter or any size less than 0.200 in. in wall thickness	2 from each lot of 250 tubes or fraction thereof

Hardness Test

11. The tubes shall have a hardness not exceeding the following:

	Brinell Hardness Number (Tubes 0.200 in. and over in Wall Thickness)	Rockwell Hardness Number (Tubes less than 0.200 in. in Wall Thickness)
Grade T1	137	B77
Grade T1a	143	B79
Grade T1b	137	B77

Mechanical Tests Required

12. (*a*) *Tension Test.*—One tension test shall be made on specimens from two tubes from each lot of 100 finished tubes or fraction thereof.

TABLE I.—CHEMICAL REQUIREMENTS.

	Grade T1	Grade T1a	Grade T1b
Carbon, per cent	0.10 to 0.20	0.15 to 0.25	0.14 max
Manganese, per cent	0.30 to 0.80	0.30 to 0.80	0.30 to 0.80
Phosphorus, max, per cent	0.045	0.045	0.045
Sulfur, max, per cent	0.045	0.045	0.045
Silicon, per cent	0.10 to 0.50	0.10 to 0.50	0.10 to 0.50
Molybdenum, per cent	0.44 to 0.65	0.44 to 0.65	0.44 to 0.65

(*b*) *Flattening Test.*—One flattening test shall be made on specimens from each end of one finished tube, not the one used for the flaring test, from each lot[4] heat-treated in a batch-type furnace. For the purpose of calculating the number of tests on tubes heat-treated by the continuous process, the number of tubes in a heat-treated lot[4] shall be determined from the size of the tubes as prescribed in Table IV.

(*c*) *Flaring Test.*—One flaring test shall be made on specimens from each end of one finished tube, not the one used for the flattening test, from each lot[4] heat treated in a batch-type furnace. For the purpose of calculating the number of tests on tubes heat treated by the continuous process, the number of tubes in a heat-treated lot[4] shall be determined from the size of the tubes as prescribed in Table IV.

(*d*) *Hardness Test.*—One Brinell or Rockwell hardness determination shall be made on 5 per cent of all tubes.

(*e*) *Hydrostatic Test.*—Each tube shall be subjected to the hydrostatic test.

[4] The term "lot" applies to all tubes of the same nominal size and wall thickness (or schedule) which are produced from the same heat of steel and subjected to the same finishing treatment in a continuous furnace; when final heat treatment is in a batch type furnace, the lot shall include only those tubes which are heat treated in the same furnace charge. When no heat treatment is performed following final forming operations, the lot shall include hot-rolled material only or cold-drawn material only.

TABLE III.—TENSILE REQUIREMENTS.

	Grade T1	Grade T1a	Grade T1b
Tensile strength, min, psi	55 000	60 000	53 000
Yield point, min, psi	30 000	32 000	28 000
Elongation in 2 in., min, per cent	30	30	30
For longitudinal strip tests the width of the gage section shall be 1 in. and a deduction for each 1/32-in. decrease in wall thickness below 5/16 in. from the basic minimum elongation of the following percentage	1.50[a]	1.50[a]	1.50[a]

[a] The following table gives the computed minimum values:

Wall Thickness, in.	Elongation in 2 in., min., per cent
5/16 (0.312)	30.00
9/32 (0.281)	28.50
1/4 (0.250)	27.00
7/32 (0.219)	25.50
3/16 (0.188)	24.00
5/32 (0.156)	22.50
1/8 (0.125)	21.00
3/32 (0.094)	19.50
1/16 (0.062)	18.00

NOTE.—The above table gives the computed minimum elongation values for each 1/32-in. decrease in wall thickness. Where the wall thickness lies between two values shown above, the minimum elongation value shall be determined by the following equation:

$$E = 48t + 15.00$$

where:
E = elongation in 2-in. in per cent, and
t = actual thickness of specimen, in inches.

Forming Operations

13. Tubes when inserted in the boiler shall stand expanding and beading without showing cracks or flaws. Superheater tubes when properly manipulated shall stand all forging, welding, and bending operations necessary for application without developing defects.

TABLE IV.—NUMBER OF TUBES IN A LOT HEAT TREATED BY THE CONTINUOUS PROCESS.

Size of Tube	Size of Lot
2 in. and over in outside diameter and 0.200 in. and over in wall thickness	not more than 50 tubes
Less than 2 in. but over 1 in. in outside diameter or over 1 in. in outside diameter and under 0.200 in. in wall thickness	not more than 75 tubes
1 in. or less in outside diameter	not more than 125 tubes

Finish

14. Finished tubes shall be reasonably straight and have smooth ends free from burrs. They shall be free from injurious defects and shall have a workmanlike finish. Minor defects may be removed by grinding provided the wall thicknesses are not decreased to less than that permitted in Table V of Specifications A 450.

Marking

15. In addition to the marking prescribed in Specification A 450, the marking shall include whether the tube is hot-finished or cold-drawn.

SPECIFICATION FOR SEAMLESS MEDIUM CARBON STEEL BOILER AND SUPERHEATER TUBES

SA-210

(IDENTICAL WITH ASTM SPECIFICATION A 210-61T EXCEPT FOR EDITORIAL CORRECTIONS)

Scope

1. (*a*) This specification covers seamless medium carbon steel boiler tubes and boiler flues, including safe ends,[3] arch and stay tubes, and superheater tubes.

(*b*) This specification covers tubes ½ to 5 in., inclusive, in outside diameter and 0.035 to 0.500 in., inclusive, in minimum wall thickness.

(*c*) The purchaser shall specify in the order the outside diameter and minimum wall thickness. The inside diameter shall not be specified.

NOTE.—Tubing smaller in outside diameter and having a thinner wall than indicated in this specification is available. These smaller sizes may require different mechanical and manipulating tests which should be a matter of agreement between the manufacturer and the purchaser.

General Requirements

2. Material furnished under this specification shall conform to the applicable requirements of the current edition of the Specification for General Requirements for Carbon, Ferritic Alloy, and Austenitic Alloy Steel Tubes (ASTM Designation: A 450), unless otherwise provided herein.

Process

3. The steel shall be a killed steel made by either or both of the following processes: open hearth or electric furnace.

Manufacture

4. Tubes shall be made by the seamless process and shall be either hot-finished or cold-drawn, as specified.

Heat Treatment

5. Hot-finished tubes shall be annealed or normalized and tempered.

[3] This type is not suitable for safe ending by forge welding.

TABLE I.—NUMBER OF SAMPLES REQUIRED FOR CHECK ANALYSIS.

Size of Tube	Number of Samples Selected
2 in. and over in diameter and 0.200 in. and over in wall thickness	2 from each lot of 100 tubes or fraction thereof
Less than 2 in. in diameter or any size less than 0.200 in. in wall thickness	2 from each lot of 250 tubes or fraction thereof

Cold-drawn tubes shall be annealed after the final pass.

Surface Condition

6. If pickling or shot blasting, or both, are required, this shall be specifically stated in the order and shall be done at the purchaser's expense.

Chemical Composition

7. The steel shall conform to the following requirements as to chemical composition:

Carbon, max, per cent	0.27
Manganese, max, per cent	0.93
Phosphorus, max, per cent	0.048
Sulfur, max, per cent	0.058
Silicon, min, per cent	0.10

Ladle Analysis

8. An analysis of each heat shall be made to determine the percentages of the elements specified. The chemical composition thus determined, or a report of check analysis as specified, shall be reported to the purchaser or his representative and shall conform to the requirements specified.

TABLE II.—TENSILE REQUIREMENTS.[a]

Tensile strength, min, psi	60 000
Yield point, min, psi	37 000
Elongation in 2 in., min, per cent	25
For longitudinal strip tests the width of the gage section shall be 1 in. and a deduction for each 1/32-in. decrease in wall thickness below 5/16 in. from the basic minimum elongation of the following percentage	1.25[b]

[a] Not applicable to tubes less than ⅛ in. in outside diameter or having wall thickness below 0.015 in., or both. The tensile properties of such small diameter or thin wall tubes shall be a matter of agreement between the manufacturer and the purchaser.

[b] The following table gives the computed minimum values:

Wall Thickness, in.	Elongation in 2 in., min, per cent
5/16 (0.312)	25.00
9/32 (0.281)	23.75
1/4 (0.250)	22.50
7/32 (0.219)	21.25
3/16 (0.188)	20.00
5/32 (0.156)	18.75
1/8 (0.125)	17.50
3/32 (0.094)	16.25
1/16 (0.062)	15.00

NOTE.—The above table gives the computed minimum elongation values for each 1/32-in. decrease in wall thickness. Where the wall thickness lies between two values shown above, the minimum elongation value shall be determined by the following equation:

where:

$$E = 40t + 12.50$$

E = elongation in 2 in. in per cent, and
t = actual thickness of specimen, in inches.

Check Analysis

9. (*a*) At the request of the purchaser, an analysis shall be made by the manufacturer of one billet or an analysis on the number of tubes selected as specified in Table I shall be made, and shall conform to the requirements specified.

TABLE III.—NUMBER OF TUBES IN A LOT HEAT TREATED BY THE CONTINUOUS PROCESS.

Size of Tube	Size of Lot
2 in. and over in outside diameter and 0.200 in. and over in wall thickness	not more than 50 tubes
Less than 2 in. but over 1 in. in outside diameter or over 1 in. in outside diameter and under 0.200 in. in wall thickness	not more than 75 tubes
1 in. or less in outside diameter	not more than 125 tubes

(*b*) If the analysis of one of these test specimens does not conform to the requirements specified, an analysis of two billets from the same heat or an analysis of two tubes from the same lot may be made, each of which shall conform to the requirements specified.

Tensile Properties

10. The material shall conform to the requirements as to tensile properties prescribed in Table II.

Hardness Requirements

11. The tubes shall have a Brinell hardness number not exceeding 143 or a Rockwell hardness number not exceeding B79.

Mechanical Tests Required

12. (*a*) *Tension Test.*—One tension test shall be made on specimens from two tubes from each lot of 100 finished tubes or fraction thereof.

(*b*) *Flattening Test.*—One flattening test shall be made on specimens from each end of one finished tube, not the one used for the flaring test, from each lot[5] heat treated in a batch-type furnace. For the purpose of calculating the number of tests on tubes heat treated by the continuous process, the number of tubes in a heat-treated lot[5] shall be determined from the size of the tubes as prescribed in Table III.

(*c*) *Flaring Test.*—One flaring test shall be made on specimens from each end of one finished tube, not the one used for the flattening test, from each lot[5] heat treated in a batch-type furnace. For the purpose of calculating the number of tests on tubes heat treated by the continuous process, the number of tubes in a heat-treated lot[5] shall be determined from the size of the tubes as prescribed in Table III.

(*d*) *Hardness Test.*—One Brinell or Rockwell hardness determination shall be made on 5 per cent of all tubes.

(*e*) *Hydrostatic Test.*—Each tube shall be subjected to the hydrostatic test.

Forming Operations

13. Tubes when inserted in the boiler shall stand expanding and bending without showing cracks or flaws. Superheater tubes when properly manipulated shall stand all forging, welding, and bending operations necessary for application without developing defects.

Finish

14. Finished tubes shall be reasonably straight and have smooth ends free from burrs. They shall be free from injurious defects and shall have a workmanlike finish. Minor defects may be removed by grinding provided the wall thicknesses are not decreased to less than that permitted in Table V of Specification A 450.

Marking

15. In addition to the marking prescribed in Specification A 450, the marking shall include the words "Medium Carbon," and whether hot-finished or cold-drawn.

[5] The term "lot" applies to all tubes of the same nominal size and wall thickness (or schedule) which are produced from the same heat of steel and subjected to the same finishing treatment in a continuous furnace; when final heat treatment is in a batch type furnace, the lot shall include only those tubes which are heat treated in the same furnace charge. When no heat treatment is performed following final forming operations, the lot shall include hot-rolled material only or cold-drawn material only.

SPECIFICATION FOR HIGH TENSILE STRENGTH CARBON-SILICON STEEL PLATES FOR BOILERS AND OTHER PRESSURE VESSELS

SA-212

(IDENTICAL WITH ASTM SPECIFICATION A 212-61T)

Scope

1. This specification covers carbon-silicon steel plates in two high tensile strength ranges, designated as grades A and B, of flange and firebox qualities; for use in locomotive boiler shells, boilers for stationary service, and other pressure vessels. The maximum thickness of flange quality plates to be specified under this specification shall be 2 in.; and for firebox quality, 8 in. This material is intended for fusion welding. Welding technique is of fundamental importance and it is presupposed that welding procedure will be in accordance with approved methods.

General Conditions for Delivery

2. Material furnished under this specification shall conform to the applicable requirements of the current edition of the Specification for General Requirements for Delivery of Rolled Steel Plates of Flange and Firebox Qualities (ASTM Designation: A 20).

Process

3. The steel shall be made by either or both of the following processes: open-hearth or electric-furnace.

Heat Treatment

4. (*a*) Plates over 2 in. in thickness shall be treated to produce grain refinement either by normalizing or heating uniformly for hot forming. If the required treatment is to be obtained in conjunction with the hot forming operation, the temperature to which the plates are heated for hot forming shall be equivalent to and shall not significantly exceed the normalizing temperature. If the treatment of the plates is not specified to be done at the plate manufacturer's plant, the testing shall be carried out in accordance with Paragraph (*b*).

(*b*) When a fabricator is equipped and elects to perform the required normalizing or fabricates by hot forming as provided in Paragraph (*a*), the plates shall be accepted on the basis of mill tests made on specimens heat treated in accordance with the purchaser's order requirements. If the heat treatment temperatures are not indicated on the purchase order, the plate manufacturer shall heat treat the specimens under conditions he considers appropriate for grain refinement, and to meet the test requirements. The plate manufacturer shall inform the fabricator of the procedure followed in treating the specimens at the mill.

(*c*) The purchaser shall indicate in his orders to the plate manufacturer whether the rolling mill or the fabricator shall perform the treatment of the plates.

(*d*) When the plates are to be normalized at the plate manufacturer's plant, the mechanical properties shall be determined on specimens simultaneously treated with the plates.

TABLE I.—CHEMICAL REQUIREMENTS[b, c]

	Grade A	Grade B
Carbon, max, per cent:		
For plates 1 in. and under in thickness	0.28	0.31
For plates over 1 to 2 in., incl, in thickness	0.31	0.33
For plates over 2 to 8 in., incl, in thickness	0.33	0.35
Manganese, max, per cent	0.90[a]	0.90[a]
Phosphorus, max, per cent:		
Flange	0.04	0.04
Firebox	0.035	0.035
Sulfur, max, per cent:		
Flange	0.05	0.05
Firebox	0.04	0.04
Silicon, per cent:		
Ladle analysis	0.15 to 0.30	0.15 to 0.30
Check analysis	0.13 to 0.33	0.13 to 0.33

[a] When steel plates are furnished under this specification to meet the impact test requirements of the Specification for Steel Plates for Pressure Vessels for Service at Low Temperatures (ASTM Designation: A 300), the manganese content shall be 0.85 to 1.20 per cent.

[b] When specified, the maximum incidental copper content shall be 0.25 per cent.

[c] When specified, the steel shall be coarse grained having a carburized austenite grain size of 1 to 5 as determined in accordance with the Method for Estimating the Grain Size of Metals (ASTM Designation: E 112), and its Plate IV, by carburizing at 1700 F for 8 hr.

TABLE II.—TENSILE REQUIREMENTS

	Grade A	Grade B
Tensile strength, psi	65 000 to 77 000	70 000 to 85 000
Yield point, min, psi	35 000	38 000
Elongation in 8 in, min, per cent:		
Flange	20[a]	18[a]
Firebox	21[a]	19[a]
Elongation in 2 in., min, per cent:		
Flange	23	21
Firebox	24[b]	22[b]

[a] See Section 6(*c*) and (*d*).

[b] See Section 6(*e*).

Chemical Composition

5. The steel shall conform to the requirements as to chemical composition prescribed in Table I.

Tensile Properties

6. (*a*) The material as represented by the test specimens shall conform to the requirements as to tensile properties prescribed in Table II.

(*b*) Tensile strength only need be determined on the tension test specimen taken from the top of firebox plates, and it shall not exceed 79,000 psi for grade A, nor 87,000 psi for grade B.

(*c*) For material under $\frac{5}{16}$ in. in thickness, a deduction from the percentage of elongation in 8 in. specified in Table II of 1.25 per cent shall be made for each decrease of $\frac{1}{32}$ in. of the specified thickness below $\frac{5}{16}$ in.

(*d*) For material over $\frac{3}{4}$ in. in thickness a deduction from the percentage of elongation in 8 in. specified in Table II of 0.5 per cent shall be made for each increase of $\frac{1}{8}$ in. of the specified thickness above $\frac{3}{4}$ in. This deduction shall not exceed 3 per cent.

(*e*) For material over $3\frac{1}{2}$ in. in thickness, a deduction from the percentage of elongation in 2 in. specified in Table II of 0.5 per cent shall be made for each increase of $\frac{1}{2}$ in. of the specified thickness above $3\frac{1}{2}$ in. This deduction shall not exceed 3 per cent.

TABLE III.—BEND DIAMETERS.

Thickness of Material, in.	Ratio of Bend Diameter to Thickness of Specimen	
	Grade A	Grade B
1 and under	$1\frac{1}{2}$	2
Over 1 to $1\frac{1}{2}$, incl	2	2
Over $1\frac{1}{2}$ to 3, incl	2	$2\frac{1}{2}$
Over 3 to $4\frac{1}{2}$, incl	$2\frac{1}{2}$	3
Over $4\frac{1}{2}$ to 8, incl	3	$3\frac{1}{2}$

Bending Properties

7. The bend test specimen shall stand being bent cold through 180 deg without cracking on the outside of the bent portion through an inside diameter which shall have the relation to the thickness of the specimen prescribed in Table III. When the test is made on a specimen reduced in thickness, the rolled surface shall be on the outer curve of the bend.

Test Specimens

8. (*a*) For plates 2 in. and under in thickness the test specimens shall be prepared for testing from the material in its rolled condition.

(*b*) For plates over 2 in. in thickness the test specimens shall be prepared from the material in its heat-treated condition, or from full thickness samples similarly and simultaneously treated (See Section 4).

(*c*) When so specified in the purchase order with the mill, test specimens representing the plates shall be stress-relieved by gradually and uniformly heating them to a temperature between 1100 and 1200 F (or a temperature range otherwise agreed upon between the manufacturer and the fabricator), holding at temperature for at least 1 hr per inch of thickness and cooling in still atmosphere to a temperature not exceeding 600 F.

Number of Tests

9. Two tension tests, one bend test and one homogeneity test shall be made from each firebox steel plate as rolled. One tension test and one bend test shall be made from each flange steel plate as rolled.

NOTE.—The term "plate as rolled" used here refers to the unit plate rolled from a slab or directly from an ingot in its relation to the location and number of specimens; not to its condition.

SPECIFICATION FOR SEAMLESS FERRITIC AND AUSTENITIC ALLOY STEEL BOILER, SUPERHEATER AND HEAT EXCHANGER TUBES

SA-213

(IDENTICAL WITH ASTM SPECIFICATION A 213-61T EXCEPT FOR EDITORIAL CORRECTIONS)

Scope

1. (*a*) This specification covers seamless ferritic and austenitic steel boiler and superheater tubes and austenitic steel heat exchanger tubes, designated Grades T 5, TP 304, etc. These steels are listed in Tables I and II, respectively.

(*b*) Grades TP 304 H, TP 316 H, TP 321 H, TP 347 H, and TP 348 H are modifications of Grades TP 304, TP 316, TP 321, TP 347, and TP 348, and are intended for high-temperature service such as for superheaters and reheaters.

(*c*) This specification covers tubes ½ to 5 in., inclusive, in outside diameter and 0.035 to 0.500 in., inclusive, in minimum wall thickness.

(*d*) The purchaser shall specify in the order the outside diameter, minimum wall thickness, and grade desired. The inside diameter shall not be specified.

NOTE 1.—Tubing smaller in outside diameter and having a thinner wall than indicated in this specification is available. These smaller sizes may require different mechanical and manipulating tests which should be a matter of agreement between the manufacturer and the purchaser.

General Requirements

2. Material furnished under this specification shall conform to the applicable requirements of the current edition of the Specification for General Requirements for Carbon, Ferritic Alloy, and Austenitic Alloy Steel Tubes (ASTM Designation: A 450), unless otherwise provided herein.

Process

3. The steel shall be made by the electric-furnace process or other processes approved by the purchaser, except that Grades T 12 and T 17 may be made by the open-hearth process.

Manufacture

4. Tubes shall be made by the seamless process and shall be either hot-finished or cold-drawn, as specified.

Heat Treatment

5. (*a*) All ferritic steels shall be furnished in the heat-treated condition unless otherwise agreed upon by the manufacturer and the purchaser and so specified in the order. The heat treatment shall be performed by a method and at a temperature selected by the manufacturer unless otherwise specified by the purchaser.

(*b*) If any controlled structural characteristics are required these shall be so specified as to be a guide as to the most suitable heat treatment.

(*c*) All austenitic tubes shall be furnished in the heat treated condition. The heat treatment procedure, except for the H grades, shall consist of heating the material to a minimum temperature of 1900 F and quenching in water or rapidly cooling by other means.

(*d*) The heat treatment of cold-worked Grade TP 321 H shall be at a minimum temperature of 2000 F. As evidence that the material has received this treatment it shall exhibit a grain size of No. 7 or coarser as determined in accordance with the Methods for Estimating the Average Grain Size of Metals (ASTM Designation: E 112).

(*e*) All H grades shall be furnished in the solution treated condition. If cold working is involved in processing, the minimum solution treating temperature for Grades TP 347 H and TP 348 H shall be 2000 F and for Grades TP 304 H and TP 316 H, 1800 F. If the H grade is hot rolled, the minimum solution treatment for Grades TP 321 H, TP 347 H, and TP 348 H shall be 1925 F, and for Grades TP 304 H and TP 316 H, 1800 F.

Surface Condition

6. (*a*) The ferritic steel tubes shall be free from scale and suitable for inspection.

(*b*) The austenitic steel tubes shall be pickled free from scale. When bright annealing is used, pickling is not necessary.

(*c*) If special pickling or shot-blasting is required, this shall be specifically stated in the order and shall be done at the purchaser's expense.

Chemical Composition

7. The steel shall conform to the requirements as to chemical composition prescribed in Tables I and II.

Ladle Analysis

8. An analysis of each heat shall be made by the manufacturer to determine the percentages of the elements specified. The chemical composition thus determined, or a report of check analysis as specified, shall be reported to the pur-

[4] The term "lot" applies to all tubes of the same nominal size and wall thickness (or schedule) which are produced from the same heat of steel and subjected to the same finishing treatment in a continuous furnace; when final heat treatment is in a batch type furnace the lot shall include only those tubes which are heat treated in the same furnace charge. When no heat treatment is performed following final forming operations, the lot shall include hot-rolled material only or cold-drawn material only.

TABLE I.—CHEMICAL REQUIREMENTS FOR FERRITIC STEEL.

Grade	Carbon, per cent	Manganese, per cent	Phosphorus, max, per cent	Sulfur, max, per cent	Silicon, per cent	Chromium, per cent	Molybdenum, per cent	Titanium, per cent	Vanadium, min, per cent
T 2	0.10 to 0.20	0.30 to 0.61	0.045	0.045	0.10 to 0.30	0.50 to 0.81	0.44 to 0.65	....	....
T 3b	0.15 max	0.30 to 0.60	0.030	0.030	0.50 max	1.65 to 2.35	0.44 to 0.65	....	....
T 5	0.15 max	0.30 to 0.60	0.03	0.03	0.50 max	4.00 to 6.00	0.45 to 0.65	....	....
T 5b	0.15 max	0.30 to 0.60	0.03	0.03	1.00 to 2.00	4.00 to 6.00	0.45 to 0.65	....	....
T 5c	0.12 max	0.30 to 0.60	0.03	0.03	0.50 max	4.00 to 6.00	0.45 to 0.65	[a]	....
T 7	0.15 max	0.30 to 0.60	0.03	0.03	0.50 to 1.00	6.00 to 8.00	0.45 to 0.65	....	....
T 9	0.15 max	0.30 to 0.60	0.03	0.03	0.25 to 1.00	8.00 to 10.00	0.90 to 1.10	....	....
T 11	0.15 max	0.30 to 0.60	0.030	0.030	0.50 to 1.50	1.00 to 1.50	0.44 to 0.65	....	....
T 12	0.15 max	0.30 to 0.61	0.045	0.045	0.50 max	0.80 to 1.25	0.44 to 0.65	....	....
T 17	0.15 to 0.25	0.30 to 0.61	0.045	0.045	0.15 to 0.35	0.80 to 1.25	....	....	0.15
T 21	0.15 max	0.30 to 0.60	0.030	0.030	0.50 max	2.65 to 3.35	0.80 to 1.06	....	....
T 22	0.15 max	0.30 to 0.60	0.030	0.030	0.50 max	1.90 to 2.60	0.87 to 1.13	....	....

[a] Grade T 5c shall have a titanium content of not less than four times the carbon content and not more than 0.70 per cent.

TABLE II.—CHEMICAL REQUIREMENTS OF AUSTENITIC STEEL.

Grade	TP 304	TP 304H	TP 304E	TP 309	TP 309H	TP 310	TP 310H	TP 316	TP 316H	TP 316L	TP 321	TP 321H	TP 347	TP 347H	TP 348	TP 348H
Carbon, per cent	0.08 max	0.04 to 0.10	0.035 max[a]	0.15 max	0.04 to 0.10	0.15 max	0.04 to 0.10	0.08 max	0.04 to 0.10	0.035 max[a]	0.08 max	0.04 to 0.10	0.08 max	0.04 to 0.10	0.08 max	0.04 to 0.10
Manganese, max, per cent	2.00	2.00	2.00	2.00	2.00	2.00	2.00	2.00	2.00	2.00	2.00	2.00	2.00	2.00	2.00	2.00
Phosphorus, max, per cent	0.040	0.040	0.040	0.040	0.040	0.040	0.040	0.040	0.040	0.040	0.040	0.040	0.040	0.040	0.040	0.040
Sulfur, max, per cent	0.030	0.030	0.030	0.030	0.030	0.030	0.030	0.030	0.030	0.030	0.030	0.030	0.030	0.030	0.030	0.030
Silicon, max, per cent	0.75	0.75	0.75	0.75	0.75	0.75	0.75	0.75	0.75	0.75	0.75	0.75	1.00	1.00	1.00	1.00
Nickel, per cent	8.00 to 11.0	8.00 to 11.0	8.00 to 13.0	19.0 to 22.0	19.0 to 22.0	24.0 to 26.0	24.0 to 26.0	11.0 to 14.0	11.0 to 14.0	10.0 to 15.0	9.00 to 13.0	9.00 to 13.0	9.00 to 13.0	9.00 to 13.0	9.00 to 13.0	9.00 to 13.0
Chromium, per cent	18.0 to 20.0	18.0 to 20.0	18.0 to 20.0	....	....	....	....	16.0 to 18.0	16.0 to 18.0	16.0 to 18.0	17.0 to 20.0	17.0 to 20.0	17.0 to 20.0	17.0 to 20.0	17.0 to 20.0	17.0 to 20.0
Molybdenum, per cent	....	....	....	....	....	....	....	2.00 to 3.00	2.00 to 3.00	2.00 to 3.00	....	....	....	....	....	....
Titanium, per cent	....	....	....	....	....	....	....	....	....	....	[b]	[c]	[d]	[e]	0.10	0.10
Columbium plus tantalum, per cent	....	....	....	....	....	....	....	....	....	....	[b]	[c]	[d]	[e]	0.10	0.10
Tantalum, max, per cent	....	....	....	....	....	....	....	....	....	....	[b]	[c]	[d]	[e]	[f]	[f]

[a] For small diameter or thin walls, or both, where many drawing passes are required, a carbon maximum of 0.040 per cent is necessary in grades TP 304L and TP 316L. Small outside diameter tubes are defined as those less than 0.500 in. in outside diameter and light wall tubes are those less than 0.049 in. in average wall thickness (0.044 in. in minimum wall thickness.)

[b] Grade TP 321 shall have a titanium content of not less than five times the carbon content and not more than 0.60 per cent.

[c] Grades TP 347 and TP 348 shall have a columbium plus tantalum content of not less than ten times the carbon content and not more than 1.00 per cent.

[d] Grade TP 321H shall have a titanium content of not less than four times the carbon content and not more than 0.60 per cent.

[e] Grades TP 347H and TP 348H shall have a columbium plus tantalum content of not less than eight times the carbon content and not more than 1.0 per cent.

TABLE III.—TENSILE REQUIREMENTS.

	Ferritic Steel	Austenitic Steel
Tensile strength, min, psi	60 000	75 000[a]
Yield point, min, psi	30 000	30 000[a]
Elongation in 2 in., min, per cent	30	35
For longitudinal strip tests the width of the gage section shall be 1 in. and a deduction for each 1/32-in. decrease in wall thickness below 5/16 in. from the basic minimum elongation of the following percentage	1.50[b]	1.75[b]

[a] Grades TP304L and TP316L shall have a minimum tensile strength of 70,000 psi and a minimum yield point of 25,000 psi.

[b] The following table gives the computed minimum values:

Wall Thickness, in.	Elongation in 2 in., min, per cent	
	Ferritic Steel	Austenitic Steel
5/16 (0.312)	30.00	35.00
9/32 (0.281)	28.50	33.25
1/4 (0.250)	27.00	31.50
7/32 (0.219)	25.50	29.75
3/16 (0.188)	24.00	28.00
5/32 (0.156)	22.50	26.25
1/8 (0.125)	21.00	24.50
3/32 (0.094)	19.50	22.75
1/16 (0.062)	18.00	21.00

NOTE.—The above table gives the computed minimum elongation values for each 1/32-in. decrease in wall thickness. Where the wall thickness lies between two values shown above, the minimum elongation value shall be determined by the following equation:

Grade	Equation
Ferritic	$E = 48t + 15.00$
Austenitic	$E = 56t + 17.50$

where:
E = elongation in 2 in. in per cent, and
t = actual thickness of specimen, in inches.

TABLE IV.—NUMBER OF TUBES IN A LOT HEAT TREATED BY THE CONTINUOUS PROCESS.

Size of Tube	Size of Lot
2 in. and over in outside diameter and 0.200 in. and over in wall thickness	not more than 50 tubes
Less than 2 in. but over 1 in. in outside diameter or over 1 in. in outside diameter and under 0.200 in. in wall thickness	not more than 75 tubes
1 in. or less in outside diameter	not more than 125 tubes

chaser or his representative and shall conform to the requirements specified.

Check Analysis

9. (*a*) An analysis of either one billet or one tube shall be made from each heat. The chemical composition thus determined shall conform to the requirements specified.

(*b*) If the analysis of one of these test specimens does not conform to the requirements specified, an analysis of each billet or tube from the same heat may be made, and all billets or tubes thus conforming to the requirements shall be accepted.

Tensile Properties

10. The material shall conform to the requirements as to tensile properties prescribed in Table III.

Hardness Requirements

11. Except for tubes fabricated from Grades T 5b, T 7, and T 9, the tubes fabricated from ferritic grades shall have a Brinell hardness not exceeding 163 (Rockwell B85). For Grades T 5b, T 7, and T 9, the Brinell hardness shall not exceed 179 (Rockwell B89). Tubes fabricated from austenitic steel shall have a Brinell hardness not exceeding 190 (Rockwell B90).

Mechanical Tests and Grain Size Determinations Required

12. (*a*) *Tension Test.*—One tension test shall be made on a specimen from one tube from each group of 100 finished tubes or fraction thereof.

(*b*) *Flattening Test.*—One flattening test shall be made on specimens from each end of one finished tube, not the one used for the flaring test, from each lot[4] heat-treated in a batch-type furnace. For the purpose of calculating the number of tests on tubes heat-treated by the continuous process, the number of tubes in a heat-treated lot[4] shall be determined from the size of the tubes as prescribed in Table IV.

(*c*) *Flaring Test.*—One flaring test shall be made on specimens from each end of one finished tube, not the one used for the flattening test, from each lot[4] heat treated in a batch-type furnace. For the purpose of calculating the number of tests on tubes heat treated by the continuous process, the number of tubes in a heat-treated lot[4] shall be determined from the size of the tubes as prescribed in Table IV.

(*d*) *Hardness Test.*—One Brinell or Rockwell hardness determination shall be made on 5 per cent of all tubes.

(*e*) *Hydrostatic Test.*—Each tube shall be subjected to the hydrostatic pressure test.

(*f*) *Grain Size.*—Grain size determinations on Grade TP 321 H shall be made on the same number of tubes as prescribed for the flattening test.

Forming Operations

13. Tubes when inserted in the boiler or tube sheet shall stand expanding and bending without showing cracks or flaws. Super-heater tubes when properly manipulated shall stand all forging, welding, and bending operations necessary for application without developing defects (Note 2).

NOTE 2.—Certain of the ferritic steels covered by this specification will harden if cooled rapidly from above their critical temperature. Some will air harden, that is, become hardened to an undesirable degree when cooled in air from high temperatures, particularly the 4 to 6 per cent chromium steels. Therefore, operations that involve heating such steels above their critical temperatures, such as welding, flanging, and hot bending, should be followed by suitable heat treatment.

Finish

14. Finished tubes shall be reasonably straight and have smooth ends free from burrs. They shall be free from injurious defects and shall have a workmanlike finish. Minor defects may be removed by grinding, provided the wall thicknesses are not decreased to less than that permitted in Table V of Specification A 450.

Marking

15. In addition to the marking prescribed in Specification A 450, the marking shall include whether the tube is hot finished or cold-drawn. For Grades TP 304 H, TP 316 H, TP 321 H, TP 347 H, and TP 348 H, the marking shall also include the heat number and heat treatment lot identification.

SPECIFICATION FOR ELECTRIC-RESISTANCE-WELDED CARBON STEEL HEAT EXCHANGER AND CONDENSER TUBES

SA-214

(IDENTICAL WITH ASTM SPECIFICATION A 214-61T EXCEPT FOR EDITORIAL CORRECTIONS)

Scope

1. (a) This specification covers electric-resistance-welded carbon steel tubes to be used for heat exchangers, condensers, and similar heat-transfer apparatus.

(b) This specification covers tubes up to 3 in., inclusive, in outside diameter.

(c) The purchaser shall specify in the order the outside diameter and minimum wall thickness. The inside diameter shall not be specified.

NOTE.—The fundamental requirements of this specification, that is, kind and number of tests, permissible variations in dimensions, inspection, etc., are applicable to types of "low-alloy" steels intended to produce greater strength at elevated temperatures, but not intended specifically for corrosion resistance at elevated temperatures. When this specification is applied to such steels, special requirements as to chemical composition, hardness, and heat treatment will need to be substituted for those specified herein and such requirements shall be a matter of agreement between the manufacturer and the purchaser.

General Requirements

2. Material furnished under this specification shall conform to the applicable requirements of the current edition of the Specification for General Requirements for Carbon, Ferritic Alloy, and Austenitic Alloy Steel Tubes (ASTM Designation: A 450), unless otherwise provided herein.

Process

3. The steel shall be made by one or more of the following processes: open hearth, basic oxygen, or electric furnace.

Manufacture

4. Tubes shall be made by electric-resistance welding.

Heat Treatment

5. Tubes shall be normalized at a temperature above the upper critical temperature.

Surface Condition

6. The finished tubes shall be free from scale. A slight amount of oxidation will not be considered as scale.

Chemical Composition

7. The steel shall conform to the following requirements as to chemical composition:

Carbon, max, per cent	0.18
Manganese, per cent	0.27 to 0.63
Phosphorus, max, per cent	0.050
Sulfur, max, per cent	0.060

Check Analysis

8. (a) An analysis of two lengths of flat rolled stock or two tubes from each lot of 250 tubes or fraction thereof may be made by the purchaser. The chemical composition thus determined shall conform to the requirements specified.

(b) If the analysis of one length of flat rolled stock or of either tube does not conform to the requirements specified, an analysis of two additional lengths of flat rolled stock or two additional tubes from the same lot shall be made, each of which shall conform to the requirements specified.

Hardness Requirements

9. The tubes shall have a Rockwell hardness number not exceeding B72.

Mechanical Tests Required

10. (a) *Flattening Test.*—One flattening test shall be made on specimens from each of two tubes from each lot of 250 tubes or fraction thereof.

(b) *Flange Test.*—One flange test shall be made on specimens from each of two tubes from each lot of 250 tubes or fraction thereof.

(c) *Reverse Flattening Test.*—One reverse flattening test shall be made on a specimen from each 1500 ft of finished tubing.

(d) *Hardness Test.*—When properly controlled continuous furnaces are used for heat treatment, 1 per cent of all tubes but in no case less than 5 tubes shall be selected for the hardness test. When heat treatment is performed in a batch-type furnace, 5 per cent of all tubes shall be selected for the hardness test.

(e) *Hydrostatic or Nondestructive Electric Test.*—Each tube shall be subjected to the hydrostatic test. When accepted by the purchaser, as an alternate, the nondestructive electric test may be applied.

Finish

11. Finished tubes shall be reasonably straight and have smooth ends free from burrs. They shall be free from injurious defects and shall have a workmanlike finish.

Marking

12. In addition to the marking prescribed in Specification A 450, the manufacturer's name or symbol shall be placed permanently on each tube by rolling or light stamping before normalizing. If a single stamp is placed on the tube by hand, this mark should be not less than 8 in. from one end of the tube.

SPECIFICATION FOR CARBON-STEEL CASTINGS SUITABLE FOR FUSION WELDING FOR HIGH-TEMPERATURE SERVICE

SA-216

(IDENTICAL WITH ASTM SPECIFICATION A 216-60T)

Scope

1. (a) These specifications cover carbon-steel castings for valves, flanges, fittings, or other pressure containing parts for high-temperature service and of quality suitable for assembly with other castings or wrought-steel parts by fusion welding (Note 1).

(b) Two grades are covered as indicated below. Selection will depend upon design and service conditions, mechanical properties, and the high-temperature characteristics (Note 2).

Grade WCA
Grade WCB

NOTE 1.—Castings suitable for welding intended for high-temperature service are also covered by the Specifications for Alloy-Steel Castings for Pressure Containing Parts Suitable for High-Temperature Service (ASTM Designation: A 217).

NOTE 2.—The grades covered by these specifications represent materials that are recognized as readily weldable by procedure as established under the accepted welding rules of such bodies as the ASME Boiler and Pressure Vessel Committee, but these limitations do not imply that material of composition differing from those specified is not weldable with the use of proper technique.

It is recommended that the use of grade WCB be confined to applications where preheating or stress relief anneal, or both, can be given the weld. Grade WCB is applicable to the design standards formulated by the Sectional Committee on Standardization of Pipe Flanges and Fittings, under the procedure of the American Standards Association, as given in the American Standard for Steel Pipe Flanges and Flanged Fittings (ASA No.: B 16.5). The Sectional Committee is now developing pressure ratings for the other grade of material covered in these specifications.

Process

2. The steel shall be made by the open-hearth, electric-furnace, or other process approved by the purchaser.

Heat Treatment

3. (a) All castings shall receive a heat treatment proper to their design and chemical composition.

(b) Heat treatment, unless otherwise specified by the purchaser, shall consist of full annealing, or of normalizing followed by full annealing, or of normalizing followed by drawing to a temperature below the critical range, or of full annealing followed by normalizing followed by drawing to a temperature below the critical range. No castings which have been quenched in any liquid medium shall be offered under the specifications except by agreement between the manufacturer and the purchaser.

(c) All castings that are to be heat treated in any manner shall have been allowed to cool, after pouring, to a temperature below the critical range.

(d) *Full Annealing.*—The procedure for full annealing shall consist in uniformly heating the castings to the proper temperature above the critical range, and cooling uniformly in the furnace.

(e) *Normalizing.*—The procedure for normalizing shall consist in heating the castings to the proper temperature above the critical range, and cooling in still air to a temperature below the critical range.

(f) *Drawing (Stress Relief Anneal).*—The procedure for drawing shall consist in heating the castings to at least 1100 F and holding at that temperature not less than 1 hr per inch or less of section, followed by cooling in the furnace or in still air.

Temperature Control

4. Furnace temperatures for heat treating shall be effectively controlled by pyrometers.

Chemical Composition

5. (a) The steel shall conform to the requirements as to chemical composition prescribed in Table I.

(b) It is recognized that unspecified alloying elements are unavoidable in cast-steel mixtures, and in the interest of uniform welding the following restrictions, when so specified by the purchaser, may be placed upon their concentration, the determination of which shall be a matter of agreement between the manufacturer and the purchaser:

TABLE I.—CHEMICAL REQUIREMENTS.

	Grade WCA	Grade WCB
Carbon, max, per cent	0.25[a]	0.30
Manganese, max, per cent	0.70[a]	1.00
Phosphorus, max, per cent	0.05	0.05
Sulfur, max, per cent	0.06	0.06
Silicon, max, per cent	0.60	0.60

[a] For each reduction of 0.01 per cent below the specified maximum carbon content, an increase of 0.04 per cent manganese above the specified maximum will be permitted up to a maximum of 1.10 per cent.

	Grade WCA and WCB
Copper, max, per cent	0.50
Nickel, max, per cent	0.50
Chromium, max, per cent	0.25
Molybdenum plus tungsten, max, per cent	0.25
Total content of these unspecified elements, max, per cent	1.0

Ladle Analysis

6. An analysis of each heat of steel shall be made by the manufacturer to determine the percentages of the elements specified in Section 5 (a). Analysis shall be made from a test ingot taken during the pouring of the heat. When drill-

ings are used, they shall be taken not less than ¼ in. beneath the surface. The chemical composition thus determined shall be reported to the purchaser or his representative, and shall conform to the requirements specified in Section 5.

Check Analysis

7. An analysis may be made by the purchaser from finished material representing each heat, lot, or casting. When drillings are used, they shall be taken not less than ¼ in. beneath the surface, except in the case of castings which are too thin, and in a manner so as not to impair the usefulness of any casting selected for such check analysis. The chemical composition thus determined shall conform to the requirements specified in Section 5.

Tensile Properties

8. (*a*) Steel used for the castings shall conform to the requirements as to tensile properties prescribed in Table II.

TABLE II.—TENSILE REQUIREMENTS.

	Grade WCA	Grade WCB
Tensile strength, min, psi	60 000	70 000
Yield point, min, psi	30 000	36 000
Elongation in 2 in., min, per cent	24	22
Reduction of area, min, per cent	35	35

(*b*) Tension tests shall be performed in accordance with the Methods and Definitions for Mechanical Testing of Steel Products (ASTM Designation: A 370). The yield point shall be determined by use of one of the following methods at a rate of separation of the crossheads under load not to exceed $\frac{1}{16}$ in. per min per in. of gage length:

(*1*) Drop of the beam or halt in the gage,

(*2*) Autographic diagram,

(*3*) Dividers, and

(*4*) Total extension under load using an extensometer. The tensile strength shall be determined at a rate of separation of the crossheads under load not to exceed ½ in. per min per inch of gage length.

Bending Properties

9. (*a*) Bend tests shall be required only when so specified in the order.

(*b*) When a bend test is specified, the test specimen shall stand being bent cold through an angle of 90 deg around a pin 1 in. in diameter without cracking on the outside of the bent portion. The bend test shall be conducted in accordance with Methods and Definitions A 370.

Hydrostatic Tests

10. (*a*) Grade WCA castings ordered under these specifications shall be satisfactorily tested after machining to such pressures as may be agreed upon by the manufacturer and the purchaser.

(*b*) Grade WCB castings shall be individually tested after machining to the hydrostatic shell test pressures prescribed in the American Standard for Steel Pipe Flanges and Flanged Fittings (ASA No.: B 16.5), for the applicable carbon steel rating for which the casting is designed, and shall show no leaks. Grade WCB castings ordered under these specifications for working pressures other than those listed in the American Standard Ratings shall be tested to such pressures as may be agreed upon by the manufacturer and the purchaser.

(*c*) It is realized that the foundry cannot perform the required pressure testing at the high pressure required on unmachined castings. Castings ordered in the rough state for final machining by the purchaser may be hydrostatically tested by the manufacturer at pressures to be agreed upon with the purchaser. However, the foundry is responsible as required under Section 20 (*b*) for the satisfactory performance of the castings under the final test required in Section 10 (*a*) or (*b*).

Magnetic Particle Testing

11. If specified by the purchaser, castings shall be examined by magnetic particle inspection. The inspection procedure used shall be in accordance with the Method of Dry Powder Magnetic Particle Inspection (ASTM Designation: E 109); and the types and degrees of discontinuities considered shall be judged by the Reference Photographs for Magnetic Particle Indications on Ferrous Castings (ASTM Designation: E 125). The extent of examination and the basis for acceptance shall be subject to agreement between the manufacturer and the purchaser; and, if this examination is specified by the purchaser to be in accordance with the Quality Standard for Steel Castings for Valves, Flanges, and Fittings and other Piping Components (Dry Powder Magnetic Particle Inspection Method) (No. SP-53) of the Manufacturers Standardization Society of the Valve and Fittings Industry, the latter shall govern.

Radiographic or Destruction Tests

12. (*a*) When so specified in the order, the purchaser may examine the castings for internal defects by means of X-rays or gamma rays. Castings showing injurious defects, as judged by the Industrial Radiographic Standards for Steel Castings (ASTM Designation: E 71), shall be rejected or repaired with the approval of the purchaser.

(*b*) Or, when so specified in the order, the purchaser may, at his own expense, select representative castings from each heat or heat-treatment charge, and cut up and etch, or otherwise prepare the sections for examination for internal defects. Should injurious defects be found which evidence unsound steel or faulty foundry technique, all of the castings from that particular pattern, heat, and heat-treatment charge may be rejected. All the rejected castings, including those cut up shall be replaced by the manufacturer without charge.

Test Specimens

13. (*a*) Test specimens shall be prepared in accordance with Methods and Definitions A 370. For castings having a net weight of not over 500 lb, tension test specimens shall be taken from test bars attached to special blocks. Tension test specimens shall be taken from test bars cast attached to the castings weighing 500 lb net or more. If the design of the castings is such that test bars should not be attached to the castings, the test bars shall be cast attached to special blocks. Test bars from which tension and bend test specimens are to be taken shall remain attached to the castings or blocks they represent through heat treatment and until presented for inspection, and shall be heat treated with the castings they represent. Test bars shall be provided in sufficient numbers to furnish specimens for the tests required in Section 14.

(*b*) If agreed upon by the manufacturer and the purchaser, tension test specimens may be cut from heat-treated castings instead of from test bars.

(*c*) Tension test specimens shall be machined to the form and dimensions of the standard round 2-in. gage length specimen shown in Fig. 6 of Methods and Definitions A 370.

(*d*) Bend test specimens shall be machined to 1 by ½ in. in section with the corners rounded to a radius not over $\frac{1}{16}$ in.

Number of Tests

14. (*a*) One tension test and, when specified, one bend test shall be made from each heat in each heat-treatment charge and, when specified, from each casting weighing 500 lb net or over.

(*b*) If any test specimen shows defective machining or develops flaws, it may be discarded, and another specimen substituted from the same lot.[5]

(*c*) If the percentage of elongation of any tension test specimen is less than that specified in Section 8 and any part of the fracture is more than ¾ in. from the center of the gage length, as indicated by scribe scratches marked on the specimen before testing, a retest shall be allowed.

Retests

15. If the results of the mechanical tests for any lot[5] do not conform to the requirements specified, such lot may be reheat-treated, but not more than twice. In the case of reheat-treatment and retest, two tension tests and, when specified, two bend tests (see Section 14 (*a*)) shall be required, all of which shall conform to the requirements specified in Sections 8 and 9.

Workmanship

16. (*a*) The castings shall conform substantially to the shapes and sizes indicated by the patterns and drawings submitted by the purchaser.

(*b*) Flanged castings from which the flanges have been machined away to make welding end castings shall not be furnished under these specifications.

(*c*) Welding ends shall be suitably protected against damage during shipping.

[5] The term "lot" as used in this paragraph means all castings from each heat in each heat-treatment charge.

Finish

17. (*a*) The castings shall be clean and free from injurious defects.

(*b*) The castings shall not be peened or plugged to stop leaks.

Repair of Defects

18. (*a*) The location of existing defects shall be determined and they shall be completely removed to sound metal. The manufacturer shall check the completeness of removal visually except in the case of a linear defect; then he shall inspect the cavity by the magnetic particle method or other method approved by the purchaser.

(*b*) Repairs shall be made using a welding procedure and by operators capable of producing sound welds of carbon steel. The type of electrode used shall produce weld metal of a strength and composition compatible with that of the casting. The need for heat treating minor repair welds is a matter for the discretion of the manufacturer except that the purchaser's inspector shall have the right to require that castings with minor repair welds shall be redrawn or stress relief annealed in accordance with the requirements in Section 3(*f*). Local tempering of the weld repairs is acceptable if, in the manufacturer's opinion, complete furnace treatment would be damaging to the finished surfaces of the machined casting.

(*c*) Weld repairs shall be considered major in the case of the casting which had leaked on hydrostatic test, or when the depth of the cavity prepared for welding exceeds 20 per cent of the wall thickness or 1 in., whichever is smaller, or when the extent of the cavity exceeds approximately 10 sq in. When requested on the order such weld repairs shall be subject to the purchaser's approval. All castings with major repair welds shall be heat treated. The heat treatment may consist of normalizing followed by drawing, annealing, or of drawing alone, at the discretion of the manufacturer. When mutually agreed upon by the purchaser and the manufacturer, major repair welds may be examined at the manufacturer's expense by magnetic particle inspection or radiographing, or both, to check the adequacy of the repair.

Marking

19. (*a*) Pressure containing castings, made in accordance with either of the grades of steel covered by these specifications, shall be marked for material identification with the ASTM symbols for the grade of steel, WCA and WCB, respectively; and the heat number or heat identification. Marking shall be in such position as not to injure the usefulness of the castings.

(*b*) Finished products shall be marked in accordance with the Standard Marking System for Valves, Fittings, Flanges, and Unions (No. SP-25) of the Manufacturers Standardization Society of the Valve and Fittings Industry.

Inspection

20. (*a*) The inspector representing the purchaser shall have free entry, at all times while work on the contract of the the purchaser is being performed, to all parts of the manufacturer's works that concern the manufacture of the material ordered. The manufacturer shall afford the inspector, without charge, all reasonable facilities to satisfy him that the material is being furnished in accordance with these specifications. All tests (except check analysis) and inspection shall be made at the place of manufacture prior to shipment, unless otherwise specified, and shall be so conducted as not to interfere unnecessarily with the operation of the works.

(*b*) If, in the case of important castings for special purposes, surface inspection in the green state is required, this shall be so specified in the order.

Rejection

21. (*a*) Unless otherwise specified, any rejection based on tests made in accordance with Section 7 shall be reported to the manufacturer within twelve working days from the receipt of samples by the purchaser.

(*b*) Material that shows injurious defects subsequent to its acceptance at the manufacturer's works will be rejected, and the manufacturer shall be notified.

Rehearing

22. Samples tested in accordance with Section 7 that represent rejected material shall be preserved for two weeks from the date of transmission of the test report. In case of dissatisfaction with the results of the tests, the manufacturer may make claim for a rehearing within that time.

SPECIFICATION FOR ALLOY-STEEL CASTINGS FOR PRESSURE CONTAINING PARTS SUITABLE FOR HIGH-TEMPERATURE SERVICE

SA-217

(IDENTICAL WITH ASTM SPECIFICATION A 217-60T)

Scope

1. (*a*) These specifications cover alloy steel castings for valves, flanges, fittings and other pressure containing parts (Note 1) intended primarily for high-temperature and corrosive services (Note 2).

(*b*) Seven grades of ferritic alloy steels are covered. Selection will depend on design and service conditions, mechanical properties and the high-temperature and corrosion resistant characteristics (Note 3).

NOTE 1.—Carbon steel castings for pressure containing parts are covered by the Specifications for Carbon-Steel Castings Suitable for Fusion Welding for High-Temperature Service (A.S.T.M. Designation: A 216).

NOTE 2.—The grades covered by these specifications represent materials which are generally suitable for assembly with other castings or wrought steel parts by fusion welding. It is not intended to imply that these grades possess equal degrees of weldability; therefore, it is the responsibility of the purchaser to establish for himself a suitable welding technique. Since these grades possess varying degrees of suitability for resistance to corrosion and for high-temperature service, it is also the responsibility of the purchaser to determine which grade shall be furnished, due consideration being given to the requirements of the applicable construction codes.

NOTE 3.—The committee formulating these specifications has included seven grades of materials which are considered to represent basic types of ferritic alloy steels suitable for valves, flanges, fittings and other pressure containing parts. Additional alloy steels which may better fulfill certain types of service will be considered for inclusion in these specifications by the committee as the need becomes apparent. Ferritic pressure-containing castings the requirements for which differ from or are beyond those listed herein may be ordered to the general requirements of these specifications with exceptions as to chemical composition, and mechanical and other properties as agreed on by the manufacturer and the purchaser. For code applications, such differing alloy steels may be used only by special permission.

Process

2. The steel shall be made by the open-hearth, electric-furnace, or other process approved by the purchaser.

Heat Treatment

3. (*a*) All castings shall receive a heat treatment proper to their design and chemical composition.

(*b*) Heat treatment shall be performed before machining except in instances when reheat-treating is necessary. Unless the method of heat treatment is specified by the purchaser, thus becoming a matter of agreement with the manufacturer, the type of heat treatment used shall be at the option of the manufacturer. This latter condition must necessarily apply for stock purposes.

(*c*) Heat treatment may consist of full annealing, or of normalizing followed by full annealing, or of normalizing followed by tempering at a temperature below the critical range, or of full annealing followed by normalizing followed by tempering at a temperature below the critical range. No castings which have been quenched in any liquid medium shall be offered under these specifications except by agreement between the manufacturer and the purchaser.

(*d*) All castings shall have been allowed to cool, after pouring, to a temperature below the critical range before heat treatment.

(*e*) *Full Annealing.*—The procedure for full annealing shall consist in uniformly heating the castings to the proper temperature above the critical range, and cooling uniformly in the furnace.

(*f*) *Normalizing.*—The procedure for normalizing shall consist in heating the casting to the proper temperature above the critical range, and cooling in air to a temperature below the critical range.

(*g*) *Tempering.*—The procedure for tempering shall consist in heating the castings to a temperature below the critical range but not less than 1100 F. (Note 5) and holding at that temperature not less than 1 hr. per inch or less of section, followed by cooling in the furnace or in air.

NOTE 5.—The tempering temperature should not be less than 100 F. above the intended operating temperature; consequently, the purchaser should advise the manufacturer when the operating temperature is to exceed 1000 F.

TABLE I.—CHEMICAL REQUIREMENTS.

Grade	Carbon-Molybdenum	Nickel-Chromium-Molybdenum	Nickel-Chromium-Molybdenum	Chromium-Molybdenum	Chromium-Molybdenum	Chromium-Molybdenum	Chromium-Molybdenum
Identification Symbol	WC1	WC4	WC5	WC6	WC9	C5	C12
Carbon, max, per cent	0.25	0.20	0.20	0.20	0.18	0.20	0.20
Manganese, per cent	0.50 to 0.80	0.50 to 0.80	0.40 to 0.70	0.50 to 0.80	0.40 to 0.70	0.40 to 0.70	0.35 to 0.65
Phosphorus, max, per cent	0.05	0.05	0.05	0.05	0.05	0.05	0.05
Sulfur, max, per cent	0.06	0.06	0.06	0.06	0.06	0.06	0.06
Silicon, max, per cent	0.60	0.60	0.60	0.60	0.60	0.75	1.00
Nickel, per cent	....	0.70 to 1.10	0.60 to 1.00	....	....	....	....
Chromium, per cent	....	0.50 to 0.80	0.50 to 0.90	1.00 to 1.50	2.00 to 2.75	4.00 to 6.50	8.00 to 10.00
Molybdenum, per cent	0.45 to 0.65	0.45 to 0.65	0.90 to 1.20	0.45 to 0.65	0.90 to 1.20	0.45 to 0.65	0.90 to 1.20

Temperature Control

4. Furnace temperatures for heat treating shall be effectively controlled by use of pyrometers.

Chemical Composition

5. (*a*) The steel shall conform to the requirements as to chemical composition prescribed in Table I.

(*b*) It is recognized that unspecified alloying elements are unavoidable in steel and in the interest of uniform welding the restrictions prescribed in Table II may be expected to be met. However, determination of these elements or certification that the limits are complied with shall be made only when specified in the inquiry and contract or order.

Ladle Analysis

6. An analysis of each heat of steel shall be made by the manufacturer to determine the percentages of the elements prescribed in Table I. Analysis shall be made from a test ingot taken during the pouring of the heat. When drillings are used, they shall be taken not less than $\frac{1}{4}$ in. beneath the surface. The chemical composition thus determined shall be reported to the purchaser or his representative, and shall conform to the requirements prescribed in Table I.

TABLE II.—RESTRICTIONS ON UNSPECIFIED ALLOYING ELEMENTS.

	Grade WC1	Grade WC4	Grade WC5	Grade WC6	Grade WC9	Grade C5	Grade C12
Copper, max, per cent	0.50	0.50	0.50	0.50	0.50	0.50	0.50
Nickel, max, per cent	0.50	....	....	0.50	0.50	0.50	0.50
Chromium, max, per cent	....	0.35	....	....	....	....	....
Tungsten, max, per cent	0.10	0.10	0.10	0.10	0.10	0.10	0.10
Total content of these unspecified elements, max, per cent	1.00	0.60	0.60	1.00	1.00	1.00	1.00

Check Analysis

7. An analysis may be made by the purchaser from finished material representing each heat, lot, or casting. When drillings are used, they shall be taken not less than $\frac{1}{4}$ in. beneath the surface, except in the case of castings which are too thin, and in a manner so as not to impair the usefulness of any casting selected for such check analysis. The chemical composition thus determined shall conform to the requirements prescribed in Table I.

Tensile Properties

8. (*a*) Tensile properties of steel used for the castings shall conform to the requirements prescribed in Table III.

(*b*) Tension tests shall be performed in accordance with the Methods and Definitions for Mechanical Testing of Steel Products (ASTM Designations: A 370). The yield point shall be determined by use of one of the following methods at a rate of separation of the cross-heads under load not to exceed $\frac{1}{16}$ in. per min per in. of gage length:

(*1*) Drop of the beam or halt in the gage,

(*2*) Autographic diagram,

(*3*) Dividers, or

(*4*) Total extension under load using an extensometer.

Where a definite yield point is not exhibited, the yield strength corresponding to a limiting permanent offset of 0.2 per cent of the gage length of the specimen shall be used. The tensile strength shall be determined at a rate of separation of the cross heads under load not to exceed $\frac{1}{2}$ in. per min per in. of gage length.

TABLE III.—TENSILE REQUIREMENTS.

Grade	Tensile Strength, min, psi.	Yield Point, min, psi	Elongation in 2 in., min, per cent	Reduction of Area, min, per cent
WC1	65 000	35 000	24	35
WC4, WC5, WC6, WC9	70 000	40 000	20	35
C5, C12	90 000	60 000	18	35

Bending Properties

9. (*a*) Bend tests shall be required only when so specified in the order.

(*b*) When a bend test is specified, the test specimen shall stand being bent cold through an angle of 90 deg. around a pin 1 in. in diameter without cracking on the outside of the bent portion. The bend test shall be conducted in accordance with Methods A 370.

Test Specimens

10. (*a*) Test specimens shall be prepared in accordance with Methods A 370. For castings having a net weight of not over 500 lb., tension test specimens shall be taken from test bars attached to special blocks. For castings having a net weight over 500 lb., the test specimens shall be taken from test bars attached to the castings where practicable. If, in the opinion of the manufacturer, the design of the castings is such that test bars should not be attached to the castings, the test bars shall be cast attached to special blocks. Test bars from which tension and bend test specimens are to be taken shall remain attached to the castings or blocks they represent through the entire heat treatment and until presented for inspection and shall be heat treated with the castings they represent. Test bars shall be provided in sufficient numbers to furnish specimens for the tests required in Section 11.

(*b*) Tension test specimens shall conform to the standard round tension test specimen with 2-in. gage length as described in Methods A 370.

(*c*) Bend test specimens shall be machined to a 1 by $\frac{1}{2}$-in. section with the corners rounded to a radius not over $\frac{1}{16}$ in.

Number of Tests

11. (*a*) One tension test and, when specified, one bend test shall be made from each heat in each heat-treatment charge and, when specified, for each casting weighing 500 lb. net or over.

(*b*) If any test specimen shows defective machining or develops flaws, it may be discarded, and another specimen substituted from the same lot (Note 6).

(*c*) If the percentage of elongation of any tension test specimen is less than that specified in Table III and any part of the fracture is more than $\frac{3}{4}$ in. from the center of the gage length, as indicated by scribe scratches marked on the specimen before testing, a retest shall be allowed.

Retests

12. If the results of the mechanical tests for any lot (Note 6) do not conform to the requirements specified, such lot may be reheat-treated, but no more than twice. In the case of reheat-treatment and retest, two tension tests and, when specified, two bend tests

(Section 11) shall be required, both of which shall conform to the requirements specified in Sections 8 and 9.

NOTE 6.—The term "lot" refers to all castings from each heat in each heat-treatment charge, except that when continuous furnaces are used, a "lot" would mean all castings from each heat subjected to identical heat-treating procedure.

Hydrostatic Tests

13. (*a*) Each casting shall be tested after machining to the maximum hydrostatic shell test pressures prescribed in the American Standard for Steel Pipe Flanges and Flanged Fittings (ASA No.: B16.5), for the applicable alloy steel rating for which the casting is designed and shall show no leaks. Castings ordered under these specifications for working pressures other than those listed in the American Standard ratings shall be tested to such pressures as may be agreed upon by the manufacturer and the purchaser.

(*b*) It is realized that the foundry cannot perform the required pressure testing at the high pressure required on unmachined castings. Castings ordered in the rough state for final machining by the purchaser may be hydrostatically tested by the manufacturer at pressures to be agreed upon with the purchaser. However, the foundry is responsible as required under Section 23(*b*) for the satisfactory performance of the castings under the final test required in Section 13(*a*).

Magnetic Particle Examination

14. If specified by the purchaser, castings shall be examined by magnetic particle inspection. The inspection procedure used shall be in accordance with the Method of Dry Powder Magnetic Particle Inspection (ASTM Designation: E 109); and the types and degrees of discontinuities considered shall be judged by the Reference Photographs for Magnetic Particle Indications on Ferrous Castings (ASTM Designation: E 125). The extent of examination and the basis for acceptance shall be subject to agreement between the manufacturer and the purchaser; and, if this examination is specified by the purchaser to be in accordance with the Quality Standard for Steel Castings for Valves, Flanges, and Fittings and other Piping Components (Dry Powder Magnetic Particle Inspection Method) (No. SP-53), of the Manufacturers Standardization Society of the Valve and Fittings Industry, the latter shall govern.

Radiographic Examination

15. When so specified in the inquiry and contract or order, castings ordered to these specifications shall be subjected to examination by means of X-rays or gamma rays for the detection of internal defects. Castings showing injurious defects, as judged by the Standard Industrial Radiographic Standards for Steel Castings (ASTM Designation: E 71), shall be rejected or repaired with the approval of the purchaser. The service requirement classification of the standards and the number of pieces made from the same pattern which are to be radiographed shall constitute a part of the inquiry and contract or order.

Destructive Examination

16. When so specified in the inquiry and contract or order, the purchaser may, at his own expense, select representative castings from an order of identical castings and cut up and etch, or otherwise prepare the sections for examination for internal defects. Should injurious defects be found which evidence unsound steel or faulty foundry technique, all of the castings produced from the same pattern and according to the same foundry technique may be rejected, subject to acceptance as the result of a non-destructive examination as may be agreed upon between the manufacturer and the purchaser.

Workmanship

17. (*a*) The castings shall conform substantially to the shapes and sizes indicated by the patterns and drawings submitted by the purchaser.

(*b*) Flanged castings from which the flanges have been machined away to make welding end castings shall not be furnished under these specifications.

Finish

18. (*a*) The castings shall be clean and free from injurious defects.

(*b*) The castings shall not be peened, plugged or impregnated to stop leaks.

Repair of Defects

19. (*a*) The location of existing defects shall be determined and they shall be completely removed to sound metal. The manufacturer shall check the completeness of removal visually, except that when the defect is a crack, or when the defect is removed by methods involving the application of high temperatures, then he shall also inspect the cavity by the magnetic particle method or other method approved by the purchaser.

(*b*) Repairs shall be made using a welding procedure and by operators capable of producing sound welds of similar alloy type composition as the casting, or of other composition as may be agreed upon by the manufacturer and the purchaser. The castings after completion of weld repairing shall be retempered as provided in Section 3(*g*) except that local tempering of the weld repairs will be permitted if, in the manufacturer's opinion, complete furnace heat treatment would be damaging to the finished surfaces of a machined casting.

(*c*) Weld repairs shall be considered major in the case of a casting which had leaked on hydrostatic test, or when the depth of the cavity prepared for welding exceeds 20 per cent of the actual wall thickness or 1 in., whichever is smaller, or when the extent of the cavity exceeds approximately 10 sq. in. When requested on the order, such weld repairs shall be subject to the purchaser's approval. He shall also have the right to require complete reheat-treatment of the repaired casting in accordance with Section 3(*c*). When mutually agreed upon by the purchaser and the manufacturer, major repair welds may be examined at the manufacturer's expense by magnetic particle inspection or radiographing, or both, to check the adequacy of the repair.

Marking

20. (*a*) Pressure containing castings, made in accordance with any of the grades of steel covered by these specifications, shall be marked for material identification with the A.S.T.M. symbols for the grade of alloy steel (WC1, WC4, etc.) and the heat number or heat identification. Marking shall be in such position as not to injure the usefulness of the castings.

(*b*) Finished products shall be marked in accordance with the Standard Marking System for Valves, Fittings, Flanges and Unions (No. SP-25) of the Manufacturers Standardization Society of the Valve and Fittings Industry.

(*c*) Pressure containing castings, made of alloy steel grades not covered by these specifications, shall be marked as required in Paragraph (*a*) except that identifying symbols for the grade of steel shall be used which will not conflict with any other A.S.T.M. symbols for steel identification.

Inspection

21. (*a*) The inspector representing the purchaser shall have free entry, at all times while work on the contract of the purchaser is being performed, to all parts of the manufacturer's works that concern the manufacture of the material ordered. The manufacturer shall afford the inspector, without charge, all reasonable facilities to satisfy him that the material is being furnished in accordance with these specifications. All tests (except check analysis) and inspection shall be made at the place of manufacture prior to shipment, unless otherwise specified, and shall be so conducted as not to interfere unnecessarily with the operation of the works.

(*b*) If, in the case of important castings for special purposes, surface inspection in the green state is required, this shall be so specified in the inquiry and contract or order.

Records

22. (*a*) Unless otherwise specified, the manufacturer shall submit to the purchaser a certified record of the results of the chemical analyses and mechanical tests together with a statement that all the requirements of these specifications have been met.

(*b*) *Certification.*—When agreed upon in writing between the manufacturer and the purchaser, a certification that the material conforms to the requirements of these specifications shall be the basis of acceptance of the material.

Rejection

23. (*a*) Unless otherwise specified, any rejection based on tests made in accordance with Section 7 shall be reported to the manufacturer within twelve working days from the receipt of samples by the purchaser.

(*b*) Material that shows injurious defects subsequent to its acceptance at the foundry's works will be rejected, and the foundry shall be notified.

Rehearing

24. Samples tested in accordance with Section 7 that represent rejected material shall be preserved for two weeks from the date of transmission of the test report. In case of dissatisfaction with the results of the tests, the manufacturer may make claim for a rehearing within that time.

SPECIFICATION FOR MANGANESE-VANADIUM STEEL PLATES FOR BOILERS AND OTHER PRESSURE VESSELS

SA-225

(IDENTICAL WITH ASTM SPECIFICATION A 225-56)

Scope

1. This specification covers manganese-vanadium steel plates in two high tensile strength ranges, designated Grade A and Grade B, intended particularly for fusion welding, for use in locomotive boiler shells, boilers for stationary service, and other pressure vessels. The maximum thickness of flange quality plates to be specified under this specification shall be 2 in.; of grades A and B firebox quality, 4 in. Welding technique is of fundamental importance and it is presupposed that welding will be in accordance with approved methods.

General Requirements for Delivery

2. Material furnished under this specification shall conform to the applicable requirements of the current edition of the Tentative Specification for General Requirements for Delivery of Rolled Steel Plates of Flange and Firebox Qualities (ASTM Designation: A 20).

Process

3. The steel shall be made by either or both of the following processes: open-hearth or electric-furnace.

Heat Treatment

4. (*a*) Plates over 2 in. in thickness shall be treated to produce grain refinement either by normalizing or heating uniformly for hot forming. If the required treatment is to be obtained in conjunction with the hot forming operation, the temperature to which the plates are heated for hot forming shall be equivalent to and shall not significantly exceed the normalizing temperature. If the treatment of the plates is not specified to be done at the plate manufacturer's plant the testing shall be carried out in accordance with Paragraph (*b*).

(*b*) When a fabricator is equipped and elects to perform the required normalizing or fabricates by hot forming as provided in Paragraph (*a*), the plates shall be accepted on the basis of mill tests made on specimens heat treated in accordance with the purchaser's order requirements. If the heat treatment temperatures are not indicated on the purchase order, the plate manufacturer shall heat treat the specimens under conditions he considers appropriate for grain refinement, and to meet the test requirements. The plate manufacturer shall inform the fabricator of the procedure followed in treating the specimens at the mill.

(*c*) The purchaser shall indicate in his orders to the plate manufacturer whether the rolling mill or the fabricator shall perform the required treatment of the plates.

(*d*) When the plates are to be normalized at the plate manufacturer's plant, the mechanical properties shall be determined on specimens simultaneously treated with the plates.

(*e*) Plates 2 in. and under in thickness will be tested and supplied in the as-rolled condition except, when agreed upon between the manufacturer and the purchaser, plates 2 in. and under may be furnished stress relieved, normalized, or normalized and stress relieved.

TABLE I.—CHEMICAL REQUIREMENTS.

	Grade A	Grade B
Carbon, max., per cent	0.18	0.20
Manganese, max., per cent	1.45	1.45
Phosphorus, max., per cent:		
Flange	0.04	0.04
Firebox	0.035	0.035
Sulfur, max., per cent:		
Flange	0.05	0.05
Firebox	0.04	0.04
Silicon, per cent:		
Ladle analysis	0.15 to 0.30	0.15 to 0.30
Check analysis	0.13 to 0.32	0.13 to 0.32
Vanadium, per cent:		
Ladle analysis	0.09 to 0.14	0.09 to 0.14
Check analysis	0.07 to 0.16	0.07 to 0.16

Chemical Composition

5. The steel shall conform to the requirements as to chemical composition prescribed in Table I.

Tensile Properties

6. (*a*) The material as represented by the tension test specimens shall conform to the requirements as to tensile properties prescribed in Table II.

(*b*) Tensile strength only need be determined on the tension test specimen

TABLE II.—TENSILE REQUIREMENTS.

	Grade A	Grade B
Tensile strength, psi	70 000 to 85 000	75 000 to 90 000
Yield point, min, psi	40 000	45 000
Elongation in 8 in., min, per cent	19[a]	18[a]
Elongation in 2 in., min, per cent:		
Flange	22	21
Firebox	23[b]	22[b]

[a] See Section 6(*c*) and (*d*).
[b] See Section 6(*e*).

TABLE III.—BEND DIAMETERS.

Thickness of Material, in.	Ratio of Bend Diameter to Thickness of Specimen	
	Grade A	Grade B
1 and under	1½	2
Over 1 to 2, incl	2	2½
Over 2 to 4, incl	2	3

taken from the top of firebox plates, and it shall not exceed 88,000 psi. for Grade A, nor 93,000 psi. for Grade B.

(*c*) For material ¾ in. and under in thickness, the elongation shall be measured on a gage length of 24 times the thickness of the specimen and the elongation shall conform to the minimum requirement specified for the 8-in. gage length.

(*d*) For plates over ¾ to ⅞ in., inclusive, in thickness, if the percentage of elongation of an 8-in. gage length test specimen falls not more than 3 per cent below the amount prescribed in Table II, the elongation shall be considered satisfactory provided the percentage of elongation in 2 in. across the break is not less than 25 per cent.

NOTE.—A characteristic of certain types of alloy steels is a local disproportionate increase in the degree of necking down or contraction of the specimens under tension test; resulting in a decrease in the percentage of elongation as the gage length is increased. The effect is not so pronounced in the thicker plates.

(*e*) For material over 3½ in. in thickness, a deduction from the percentage of elongation in 2 in. specified in Table II of 0.5 per cent shall be made for each increase of ½ in. of the specified thickness above 3½ in. This deduction shall not exceed 3 per cent.

Bending Properties

7. The bend test specimen shall stand being bent cold through 180 deg. without cracking on the outside of the bent portion through an inside diameter which shall have the relation to the thickness of the specimen prescribed in Table III. When the test is made on a specimen reduced in thickness, the rolled surface shall be on the outer curve of the bend.

Test Specimens

8. (*a*) For plates 2 in. and under in thickness the test specimens shall be prepared for testing from the material in its rolled condition.

(*b*) For plates over 2 in. in thickness the test specimens shall be prepared from the material in its heat-treated condition, or from full thickness samples similarly and simultaneously treated (See Section 4).

(*c*) When so specified in the purchase order with the mill, test specimens representing the plates shall be stress-relieved by gradually and uniformly heating them to a temperature between 1100 and 1200 F. (or a temperature range otherwise agreed upon between the manufacturer and the fabricator), holding at temperature for at least 1 hr. per inch of thickness and cooling in still atmosphere to a temperature not exceeding 600 F.

Number of Tests

9. Two tension tests, one bend test and one homogeneity test shall be made from each firebox steel plate as rolled. One tension test and one bend test shall be made from each flange steel plate as rolled.

NOTE.—The term "plate as rolled" used here refers to the unit plate rolled from a slab or directly from an ingot in its relation to the location and number of specimens; not to its condition.

Marking

10. As provided in ASTM Specifications A 20, each plate shall be legibly stamped or stenciled depending on ordered thickness with the letters "MV" in addition to the regular markings.

SPECIFICATION FOR ELECTRIC-RESISTANCE-WELDED CARBON STEEL BOILER AND SUPERHEATER TUBES FOR HIGH PRESSURE SERVICE

SA-226

(IDENTICAL WITH ASTM SPECIFICATION A 226-61T EXCEPT FOR EDITORIAL CORRECTIONS)

Scope

1. (*a*) This specification covers electric-resistance-welded carbon steel boiler and superheater tubes for high pressure service.

(*b*) This specification covers tubes ½ to 5 in., inclusive, in outside diameter and 0.085 to 0.360 in., inclusive, in minimum wall thickness.

(*c*) The purchaser shall specify in the order the outside diameter and minimum wall thickness. The inside diameter shall not be specified.

General Requirements

2. Material furnished under this specification shall conform to the applicable requirements of the current edition of the Specification for General Requirements for Carbon, Ferritic Alloy, and Austenitic Alloy Steel Tubes (ASTM Designation: A 450), unless otherwise provided herein.

Process

3. The steel shall be a killed steel made by either or both of the following processes: open hearth or electric furnace.

Manufacture

4. Tubes shall be made by electric-resistance welding.

Heat Treatment

5. Tubes shall be normalized at a temperature above the upper critical temperature.

Chemical Composition

6. The steel shall conform to the following requirements as to chemical composition:

Carbon, per cent	0.06 to 0.18
Manganese, per cent	0.27 to 0.63
Phosphorus, max, per cent	0.050
Sulfur, max, per cent	0.060
Silicon, max, per cent	0.25

Check Analysis

7. (*a*) An analysis of two lengths of flat rolled stock or two tubes from each lot of 100 tubes or fraction thereof may be made by the purchaser. The chemical composition thus determined shall conform to the requirements specified.

(*b*) If the analysis of one length of flat rolled stock or of either tube does not conform to the requirements specified, an analysis of two additional lengths of flat rolled stock or two additional tubes of the same lot shall be made, each of which shall conform to the requirements specified.

Hardness Requirements

8. The tubes shall have a Brinell hardness number not exceeding 125 or a Rockwell hardness number not exceeding B72.

Mechanical Tests Required

9. (*a*) *Flattening Test.*—One flattening test shall be made on specimens from each of two tubes from each lot of 250 tubes or fraction thereof.

(*b*) *Flange Test.*—One flange test shall be made on specimens from each of two tubes from each lot of 250 tubes or fraction thereof.

(*c*) *Reverse Flattening Test.*—One reverse flattening test shall be made on a specimen from each 1500 ft of finished tubing.

(*d*) *Hardness Test.*—When properly controlled continuous furnaces are used for heat treatment, 1 per cent of all tubes but in no case less than 5 tubes shall be selected for the hardness test. When heat treatment is performed in a batch-type furnace, 5 per cent of all tubes shall be selected for the hardness test.

(*e*) *Hydrostatic or Nondestructive Electric Test.*—Each tube shall be subjected to the hydrostatic test. When accepted by the purchaser, as an alternate, the nondestructive electric test may be applied.

Forming Operations

10. Tubes when inserted in the boiler shall stand expanding and bending without showing cracks or flaws, or opening at the weld. Superheater tubes when properly manipulated shall stand all forging, welding, and bending operations necessary for application without developing defects.

Finish

11. Finished tubes shall be reasonably straight and have smooth ends free from burrs. They shall be free from injurious defects and shall have a workmanlike finish. Minor defects may be removed by grinding, provided the wall thicknesses and the outside diameters are not decreased to less than that permitted in Tables V and VI of Specification A 450.

Marking

12. In addition to the marking prescribed in Specification A 450, the words "Electric Resistance-Welded Steel" shall be legibly stenciled on each tube or marked on a tag attached to the bundle or box in which the tubes are shipped.

EXPLANATORY NOTE

NOTE.—For purposes of design, the following tensile properties may be assumed:

Tensile strength, min, psi	47 000
Yield point, min, psi	26 000
Elongation in 2 in., min, per cent	35

SPECIFICATION FOR MILD STEEL ARC-WELDING ELECTRODES

SA-233

(IDENTICAL WITH ASTM SPECIFICATION A 233-58T)

Scope

1. This specification prescribes requirements for lightly coated and covered mild steel metal arc-welding electrodes for welding carbon and low-alloy steels.

PART I.—CLASSIFICATION AND ACCEPTANCE

Classification

2. (*a*) The electrodes are classified on the basis of the mechanical properties of the as-welded deposited weld metal, type of covering, welding position of the electrode, and type of current (see Table I).

(*b*) Any electrode classified under one classification shall not be classified under any other classification, except that an electrode which complies with an E70XX classification in this specification shall be simultaneously classified as an E60XX electrode of the same type classification.

Manufacture

3. The electrodes may be made by any method that will yield a product conforming to the requirements of this specification.

Acceptability

4. At the option and expense of the purchaser any or all of the tests required by this specification may be used as a basis for acceptance of the electrodes.

Chemical Composition

5. The chemical composition of the deposited metal shall conform with the requirements of Table II.

TABLE I.—ELECTRODE CLASSIFICATION.

AWS-ASTM Classification	Type of Coating or Covering	Capable of Producing Satisfactory Welds in Positions Shown[a]	Type of Current
E45 SERIES.—MINIMUM TENSILE STRENGTH OF DEPOSITED METAL IN AS-WELDED CONDITION 45,000 PSI.			
E4510, E4520	Sulcoated or light coated	F, V, OH, H H-Fillets, F	Not specified but generally dc, straight polarity (electrode negative)
E60 SERIES.—MINIMUM TENSILE STRENGTH OF DEPOSITED METAL IN AS-WELDED CONDITION 60,000 PSI (OR HIGHER—SEE TABLE III).			
E6010	High cellulose sodium	F, V, OH, H	For use with dc, reverse polarity (electrode positive) only.
E6011	High cellulose potassium	F, V, OH, H	For use with ac or dc reverse polarity (electrode positive).
E6012	High titania sodium	F, V, OH, H	For use with dc, straight polarity (electrode negative), or ac.
E6013	High titania potassium	F, V, OH, H	For use with ac or dc, straight polarity (electrode negative).
E6014	Iron powder, titania	F, V, OH, H	For use with dc, either polarity or ac.
E6015	Low hydrogen sodium	F, V, OH, H	For use with dc, reverse polarity (electrode positive) only.
E6016	Low hydrogen potassium	F, V, OH, H	For use with ac or dc reverse polarity (electrode positive).
E6018	Iron powder, low hydrogen	F, V, OH, H	For use with ac or dc, reverse polarity.
E6020	High iron oxide	H-Fillets, F	For use with dc, straight polarity (electrode negative), or ac for horizontal fillet welds; and dc, either polarity, or ac, for flat-position welding.
E6024	Iron powder, titania	H-Fillets, F	For use with dc, either polarity, or ac.
E6027	Iron powder, iron oxide	H-Fillets, F	For use with dc, straight polarity (electrode negative), or ac for horizontal fillet welds; and dc, either polarity, or ac, for flat-position welding.
E6028	Iron powder, low hydrogen	H-Fillets, F	For use with ac or dc, reverse polarity.
E6030	High iron oxide	F	For use with dc, either polarity, or ac.
E70 SERIES.—MINIMUM TENSILE STRENGTH OF DEPOSITED METAL IN AS-WELDED CONDITION 70,000 PSI (OR HIGHER—SEE TABLE III).			
E7014	Iron powder, titania	F, V, OH, H	For use with dc, either polarity, or ac.
E7015	Low hydrogen sodium	F, V, OH, H	For use with dc, reverse polarity (electrode positive) only.
E7016	Low hydrogen potassium	F, V, OH, H	For use with ac or dc reverse polarity (electrode positive).
E7018	Iron powder, low hydrogen	F, V, OH, H	For use with ac or dc, reverse polarity.
E7024	Iron powder, titania	H-Fillets, F	For use with dc, either polarity, or ac.
E7028	Iron powder, low hydrogen	H-Fillets, F	For use with ac or dc, reverse polarity.

[a] The abbreviations F, H, V, OH, and H-Fillets indicate welding positions (Figs. 1 and 2) as follows:

F = Flat
H = Horizontal
H-Fillets = Horizontal Fillets
V = Vertical
OH = Overhead
For electrodes 3/16 in. and under, except 5/32 in. and under for classifications EXX14, EXX15, EXX16 and EXX18.

Mechanical Tests

6. The following tests are prescribed to demonstrate the mechanical properties and soundness of the deposited metal and the usability of the electrodes classified herein:

	Section
All-Weld-Metal Tension Test	21
Transverse Guided-Bend Test	22
Fillet-Weld Test	23

Methods of Test

7. Test specimens shall be prepared in accordance with Sections 17 to 23 of this specification.

Test Requirements

8. In order to be classified under this specification, an electrode shall be capable of yielding the following mechanical test results in addition to the chemical requirements prescribed in Section 5:

(*a*) All-weld-metal tension test specimens, as welded, shall conform to the mechanical requirements prescribed in Table III.

(*b*) Transverse guided-bend test specimens, after bending, shall show no crack or other open defect exceeding $\frac{1}{8}$ in. measured in any direction. Cracks occurring on corners of a specimen during testing shall not be considered.

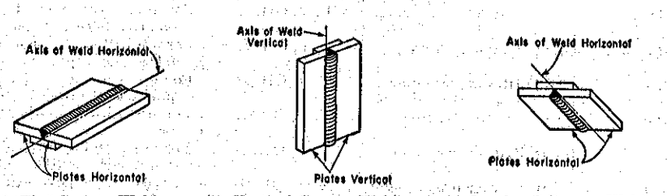

(*a*) Flat Groove Welds. (*b*) Vertical Groove Welds. (*c*) Overhead Groove Welds.

FIG. 1.—Positions of Test Plates for Welding Guided-Bend Test Specimens.

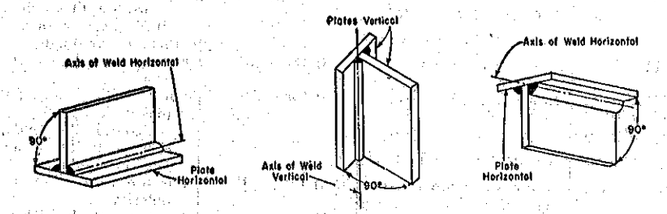

(*a*) Horizontal Fillet Welds. (*b*) Vertical Fillet Welds. (*c*) Overhead Fillet Welds.

FIG. 2.—Positions of Test Plates for Welding Fillet-Weld Test Specimens.

TABLE II.—CHEMICAL REQUIREMENTS.

NOTE.—Single values shown are maximum percentages.

AWS-ASTM Classification	Magnesium, per cent	Chromium, per cent	Manganese, per cent	Nickel, per cent	Vanadium, per cent	Silicon, per cent
E6014, E6015, E6016, E6018, E6024, E6028, E7014, E7015, E7016, E7018, E7024, E7028	0.30*	0.20*	1.25*	0.30*	0.08*	0.90
E4510, E4520, E6010, E6011, E6012, E6013, E6020, E6027, E6030	No chemical requirements					

* The sum total of all elements with the asterisk shall not exceed 1.50 per cent.

TABLE III.—MINIMUM TENSILE STRENGTH AND DUCTILITY REQUIREMENTS FOR ALL-WELD-METAL TENSION TEST IN THE AS-WELDED CONDITION.[a]

AWS-ASTM Classification	Tensile Strength, min, psi	Yield Point, min, psi	Elongation in 2 in., min, per cent
E45 series:			
E4510	45 000	not specified	5
E4520	45 000	not specified	5
E60 series:[b]			
E6010	62 000	50 000	22
E6011	62 000	50 000	22
E6012	67 000	55 000	17
E6013	67 000	55 000	17
E6014	67 000	55 000	17
E6015	67 000	55 000	22
E6016	67 000	55 000	22
E6018	67 000	55 000	22
E6020	62 000	50 000	25
E6024	67 000	55 000	17
E6027	62 000	50 000	25
E6028	67 000	55 000	22
E6030	62 000	50 000	25
E70 series:[c]			
E7014	72 000	60 000	17
E7015	72 000	60 000	22
E7016	72 000	60 000	22
E7018	72 000	60 000	22
E7024	72 000	60 000	17
E7028	72 000	60 000	22

[a] See Table V for sizes to be tested.

[b] For each increase of one percentage point in elongation over the minimum, the yield point or tensile strength or both may decrease 1,000 psi to a minimum of 60,000 psi for the tensile strength and 48,000 psi for the yield point.

[c] For each increase of one percentage point in elongation over the minimum, the yield point or tensile strength or both may decrease 1,000 psi to a minimum of 70,000 psi for the tensile strength and 58,000 psi for the yield point.

(*c*) Fillet-weld test specimens shall be free from cracks or other open defects. Examination of the section that has been polished and etched as prescribed shall show the following:

(*1*) Each fillet weld shall have penetrated to or beyond the junction of the plate edges.

(*2*) The difference in length of both legs of each fillet weld shall be not more than $\frac{3}{64}$ in. for a $\frac{5}{32}$ in. fillet weld, plus $\frac{1}{64}$ in. additional for each additional $\frac{1}{32}$ in. of fillet weld size.

(*3*) The convexity (of convex fillet welds) shall be not more than $\frac{3}{64}$ in. for a $\frac{1}{8}$-in. fillet weld, plus $\frac{1}{64}$ in. additional for each additional $\frac{1}{8}$ in. of weld size (see Fig. 10).

(*4*) The welds shall be free from cracks, and

(*5*) The weldment shall be reasonably free from undercut, overlap, trapped slag, and porosity.

Retests

9. If any specimen fails, one additional test assembly shall be welded and tested and the results shall meet the requirements of Section 8. A specimen which fails in the base metal shall be considered no test.

Core Wire and Coverings

10. (*a*) The diameter of the core wire shall not vary more than ±0.002 in. from the standard size specified. The length shall not vary more than ±$\frac{1}{2}$ in. from that specified.

(*b*) The covering on all sizes of covered electrodes shall be concentric to the extent that the maximum core-plus-one-covering dimension shall not exceed the minimum core-plus-one-covering dimension by more than 5 per cent of the mean dimension for EXX14, EXX15, EXX16, EXX18, EXX24, EXX27 and EXX28 electrodes and 3 per cent for all other classes of electrodes. The concentricity shall be measured by any suitable means.

(*c*) Core wire and coverings shall be free of defects which would interfere with uniform performance of the electrodes.

TABLE IV.—STANDARD SIZES AND LENGTHS.

Standard Sizes, Diameter of Core Wire, in.	Standard Lengths, in.[a, b]	
	EXX10, EXX11, EXX12, EXX13, EXX14, EXX15, EXX16, EXX18 Classifications	EXX20, EXX24, EXX27, EXX28, EXX30, Classifications
$\frac{1}{16}$[c]	9	...
$\frac{5}{64}$[c]	9 or 12	...
$\frac{3}{32}$[c]	12	12
$\frac{1}{8}$	14	14
$\frac{5}{32}$	14	14
$\frac{3}{16}$	14	14 or 18
$\frac{7}{32}$	14 or 18	18
$\frac{1}{4}$	18	18
$\frac{5}{16}$[c]	18	18

[a] Electrodes may also be provided in coils or reels.

[b] In all cases, end gripping is standard.

[c] These diameters are not manufactured in all classifications of electrodes (see Table V).

Exposed Core

11. (*a*) Covered electrodes for manual welding shall be bare or free from covering for a distance of about $\frac{3}{4}$ in., but not more than $1\frac{1}{4}$ in. for electrodes not exceeding $\frac{7}{32}$ in. ($1\frac{1}{2}$ in. for $\frac{1}{4}$- and $\frac{5}{16}$-in. electrodes) for making contact with the holder.

(*b*) The arc end of each electrode shall be sufficiently bare to permit easy striking of the arc. The distance from the

TABLE V.—SUMMARY OF MECHANICAL TESTS REQUIRED.[a]

AWS-ASTM Classification	Electrode: Diameter, in.	Electrode: Current and Polarity	All-Weld-Metal Tension Test[b, c]	Transverse Guided-Bend Test,[b, d]	Fillet-Weld Test[b, e]
E4510	$\frac{1}{16}$ to $\frac{1}{8}$, incl.	not specified	not required	not required	not required
	$\frac{5}{32}$ and $\frac{3}{16}$		F	not required	not required
	$\frac{7}{32}$ and $\frac{1}{4}$		not required	not required	not required
	$\frac{5}{16}$		not required	not required	not required
E4520	$\frac{1}{16}$ to $\frac{1}{8}$, incl.	not specified	not required	not required	not required
	$\frac{5}{32}$ and $\frac{3}{16}$		F	not required	not required
	$\frac{7}{32}$ and $\frac{1}{4}$		not required	not required	not required
	$\frac{5}{16}$		not required	not required	not required
E6010	$\frac{3}{32}$ and $\frac{1}{8}$	dc, reverse polarity (electrode positive)	not required	not required	not required
	$\frac{5}{32}$ and $\frac{3}{16}$		F	not required	V and OH
	$\frac{7}{32}$		not required	not required	not required
	$\frac{1}{4}$		F	F	H
	$\frac{5}{16}$		F	F	not required
E6011	$\frac{3}{32}$ and $\frac{1}{8}$	ac and dc, reverse polarity (electrode positive)	not required	not required	not required
	$\frac{5}{32}$ and $\frac{3}{16}$		F	not required	V and OH
	$\frac{7}{32}$		not required	not required	not required
	$\frac{1}{4}$		F	F	H
	$\frac{5}{16}$		F	F	not required
E6012	$\frac{1}{16}$ to $\frac{1}{8}$, incl.	dc, straight polarity (electrode negative), and ac	not required	not required	not required.
	$\frac{5}{32}$ and $\frac{3}{16}$		F	not required	V and OH
	$\frac{7}{32}$		not required	F	not required
	$\frac{1}{4}$		F	F	H
	$\frac{5}{16}$		F	F	H
E6013	$\frac{1}{16}$ to $\frac{1}{8}$, incl.	ac and dc, straight polarity (electrode negative)	not required	not required	not required
	$\frac{5}{32}$ and $\frac{3}{16}$		F	V and OH	V and OH
	$\frac{7}{32}$		not required	not required	not required.
	$\frac{1}{4}$		F	F	H
	$\frac{5}{16}$		F	F	H
E6014 and E7014	$\frac{3}{32}$ and $\frac{1}{8}$	dc, both polarities, and ac	not required	not required	not required
	$\frac{5}{32}$		F*	V and OH	V and OH
	$\frac{3}{16}$		F*	F	H
	$\frac{7}{32}$		not required	not required	not required
	$\frac{1}{4}$		F*	F	H
	$\frac{5}{16}$		F*	F	H
E6015 and E7015	$\frac{3}{32}$ and $\frac{1}{8}$	dc, reverse polarity (electrode positive)	not required	not required	not required
	$\frac{5}{32}$		F	V and OH	V and OH
	$\frac{3}{16}$		F	F	H
	$\frac{7}{32}$		not required	not required	not required
	$\frac{1}{4}$		F	F	H
	$\frac{5}{16}$		F	F	not required
E6016 and E7016	$\frac{3}{32}$ and $\frac{1}{8}$	ac and dc, reverse polarity (electrode positive	not required	not required	not required
	$\frac{5}{32}$		F	V and OH	V and OH
	$\frac{3}{16}$		F	F	H
	$\frac{7}{32}$		not required	not required	not required
	$\frac{1}{4}$		F	F	H
	$\frac{5}{16}$		F	F	not required
E6018 and E7018	$\frac{3}{32}$ and $\frac{1}{8}$	ac and dc, reverse polarity	not required	not required	not required
	$\frac{5}{32}$		F	V and OH	V and OH
	$\frac{3}{16}$		F	F	H
	$\frac{7}{32}$		not required	not required	not required
	$\frac{1}{4}$		F	F	H
	$\frac{5}{16}$		F	F	not required

TABLE V.—*Concluded.*

AWS-ASTM Classification	Electrode: Diameter, in.	Electrode: Current and Polarity	All-Weld-Metal Tension Test[b, c]	Transverse Guided-Bend Test[b, d]	Fillet-Weld Test[b, e]
E6020	1/8	dc, straight polarity (electrode negative), and ac for horizontal fillet welds; dc, both polarities, and ac for flat-position welding	not required	not required	not required
	5/32 and 3/16		F*	F	H
	7/32		not required	not required	not required
	1/4		F*	F	H
	5/16		F*	F	not required
E6024 and E7024	3/32 and 1/8	dc, both polarities, and ac	not required	not required	not required
	5/32 and 3/16		F*	F	H
	7/32		not required	not required	not required
	1/4		F*	F	H
E6027	1/8	dc, straight polarity (electrode negative), and ac, for horizontal fillet welds; dc, both polarities, and ac for flat-position welding	not required	not required	not required
	5/32, 3/16		F*	F	H
	7/32		not required	not required	not required
	1/4		F*	F	H
E6028 and E7028	1/8	ac and dc, reverse polarity	not required	not required	not required
	5/32 and 3/16		F	F	H
	7/32		not required	not required	not required
	1/4		F	F	H
E6030	1/8	dc, both polarities, and ac	not required	not required	not required
	5/32 and 3/16		F*	F	not required
	7/32		not required	not required	not required
	1/4		F*	F	not required
	5/16		F*	F	not required

* D.c., straight polarity only may be used where dc, both polarities, is specified.

[a] For electrodes smaller than 5/32 in. and for the 7/32-in. size, the specified tests would require detailed modification; such sizes may be judged from the results of tests on the 5/32- and 1/4-in. sizes, respectively.

[b] The abbreviations F, H, V, OH, and H-Fillets are defined in footnote *a* under Table I.

[c] See Sections 8 and 21.

[d] See Sections 8 and 22.

[e] See Sections 8 and 23.

arc end to the first point where the full cross-section of the covering prevails shall not exceed the diameter of the core wire. However, for electrodes larger than 1/8 in. the core wire shall not be exposed around more than one-half the circumference at a distance of 1/8 in. or more from the arc end.

Standard Sizes and Lengths

12. Standard sizes and lengths of electrodes are as shown in Table IV. In all cases, standard size refers to the diameter of the core wire.

Packaging

13. Electrodes shall be packaged as follows:

(*a*) Bundles or boxes, not exceeding 75 lb net weight, or

(*b*) Coils or reels, not exceeding approximately 200 lb net weight.

Marking

14. All bundles, boxes, coils, and reels shall be legibly marked with the following information:

(*a*) Classification,

(*b*) Manufacturer's name and trade designation, and

(*c*) Size and net weight.

Color Markings for Electrode Identification.

15. All electrodes shall be color marked in accordance with the current "Standard for Identification of Covered Arc-Welding Electrodes" of the National Electrical Manufacturers Association.

Guarantee

16 The manufacturer shall guarantee that the electrodes in all sizes and classifications conform to this specification. The manufacturer's responsibility shall be limited to replacement of any electrodes that do not conform to the requirements of this specification.

PART II.—DETAILS OF TESTS

Required Tests

17. (*a*) The tests specified in Sections 5 and 6 shall be conducted in accordance with the requirements of Sections 18 to 23, incl., of this Part II.

(*b*) Mechanical tests shall be made in accordance with the requirements of Table V for each size and classification of electrode using the positions of welding and types of current shown; all of the details of testing shall conform to the requirements of this Part II.

Material for Test Plates

18. Steel to be used for test plates for both mechanical tests and chemical analysis shall conform to one of the following specifications:

(*a*) Specification for Low and Intermediate Tensile Strength Carbon-Steel Plates of Flange and Firebox Qualities (Plates 2 in. and Under in Thickness) (ASTM Designation: A 285), grade C, or

(*b*) Specification for Steel for Bridges and Buildings (ASTM Designation: A 7) openhearth or electric furnace steel, or

(*c*) Specification for Structural Steel for Welding (ASTM Designation: A 373).

Conditioning of Electrodes for Test

19. Electrodes shall be tested in the as-received condition, except in the case of classifications EXX15, EXX16, EXX18 and EXX28. Electrodes in these classifications, if they have not been adequately protected against moisture pickup in storage, shall be heated to 450 to 500 F for a period of 1 to 3 hr immediately prior to welding.

Chemical Analysis

20. (*a*) Chemical analysis test pads shall be prepared for the 5/32- and 1/4-in. sizes of electrode specified in Table II using the types of current shown for that classification and size in Table V. All welding shall be done in the flat position.

(*b*) Weld pads shall conform to the following dimensions:

Electrode Size, in.	Minimum Pad Size, in.
5/32	1½ by 1½ by ½
1/4	2 by 2 by ½

(*c*) Pads shall be deposited in layers. The width of each bead of each layer shall measure 1½ to 2½ times the diameter of the core wire. After each layer, the pad shall be immersed in water (temperature unimportant) for 30 sec.

(*d*) The top surface of the pad shall be removed and discarded and a sample sufficient for analysis shall be removed in such a manner that no metal is removed within 1/4 in. of the surface of the base plate.

(*e*) Chemical analysis may be made by any suitable method agreed upon by the manufacturer and purchaser. In case of dispute, the procedure in the latest edition of the Standard Methods for Chemical Analysis of Steel, Cast Iron, Open-Hearth Iron, and Wrought Iron (ASTM Designation: E 30) shall be the referee method.

Electrode Size, in.	Full Weave For Layer No.	Split Weave: Layer No.	Split Weave: Passes per Layer	Number of Layers
5/32	1	2 to top	2	7 to 9
3/16	1 and 2	3 to top	2	6 to 8
1/4, 5/16	1, 2, and 3	4 to top	2	5 to 7

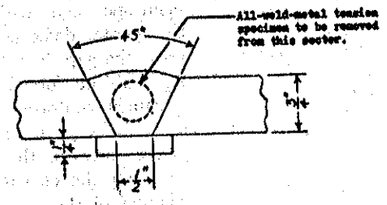

NOTE.—Each layer shall be approximately 1/8 in. thick.

(*a*) Groove Preparation of Test Plate.

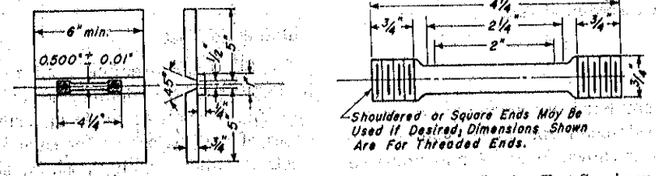

(*b*) Test Plate Showing Location of Test Specimens. (*c*) Tension Test Specimen.

FIG. 3.—All-Weld-Metal Tension Test.

All-Weld-Metal Tension Test

21. (*a*) Test assemblies as required in Table V and as shown in Fig. 3 shall be made up using the types of current shown for each size of electrode and welding position shown (see Fig. 1 for welding position). When a classification of electrode permits its use with more than one type of current (or polarity), it shall be tested using each type of current (and polarity) (see Table V).

(*b*) The test assembly shall be insulated from the welding bench by 1/2 in. of asbestos during welding. After tack welding, the assembly shall be heated in boiling water for approximately 5 min prior to welding. The work shall be done in an ambient temperature of not less than 60 F. Pass sequence shall be as shown in Fig. 3.

(*c*) After depositing each layer, the assembly shall be left on the asbestos to cool in still air for a minimum of 5 min and then immersed in boiling water for approximately 5 min. Each subsequent layer shall be deposited immediately after removal from boiling water. After the last pass, the assembly shall be removed from boiling water after the 5-min period.

(*d*) If it is necessary to interrupt the pass sequence prescribed in Paragraph (*c*), the assembly shall be removed from the boiling water after a 5-min period and allowed to cool in still air at room temperature. When ready to resume work, the assembly shall be preheated in boiling water for a period of 5 min.

(*e*) No stress relieving shall be performed on the test assembly or on the specimen removed therefrom.

(*f*) One all-weld-metal tension test specimen shall be machined from each finished test assembly as shown in Fig. 3. The machined specimen shall be aged at 200 to 220 F for 18 to 24 hr. The specimen shall then be cooled to room temperature and subjected to tension until rupture.

Transverse Guided-Bend Test

22. (*a*) Test assemblies, as required in Table V and as shown in Figs. 4 and 6, shall be made up using the types of current shown for each size of electrode and welding position shown. (See Fig. 1 for welding positions.) When a classification of electrode permits its use with more than one type of current (or polarity), it shall be tested using each type of current (and polarity).

(*b*) The required test plates shall be so restrained or preset that warping due to welding will not cause the finished test plate to be out of line by more than 5 deg. An assembly that has warped more than 5 deg shall be discarded. (Assemblies shall not be straightened.)

(*c*) For electrodes 5/32 and 3/16 in. in diameter a test joint conforming to the requirements of Fig. 4 shall be prepared. When welding in the vertical position is specified, the progression shall be upward. The first pass shall be started with the test assembly at a temperature between 60 and 100 F. No stress re-

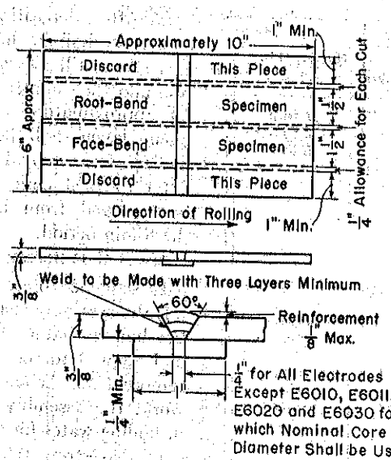

FIG. 4.—Test Joint for Transverse-Guided-Bend Test.

lieving shall be performed on the test assembly or on the specimens removed therefrom. From each completed test assembly one transverse face-bend and one transverse root-bend specimen shall be removed as shown in Fig. 4 and prepared for testing as shown in Fig. 5.

(*d*) For electrodes ¼ and 5/16 in. in diameter, a test joint conforming to the requirements of Fig. 6 shall be prepared. The first pass shall be started with the test assembly at a temperature between 60 and 100 F. No stress relieving shall be performed on the test assembly or on the specimens removed therefrom. From each completed test assembly two transverse side-bend specimens shall be removed as shown in Fig. 6 and prepared for testing as shown in Fig. 7.

(*e*) Each of the transverse face-, root-, and side-bend specimens shall be bent in a jig having the working contour shown in Fig. 8, and otherwise substantially in accordance with Fig. 8. Any convenient means may be used for moving the plunger member with relation to the die member. The specimen shall be placed on the die member with the weld at midspan. Face-bend specimens shall be placed with the face of the weld directed toward the gap, root-bend specimens with the root of the weld directed toward the gap, and side-bend specimens with that side showing the greater defects, if any, directed toward the gap. The two members of the jig shall be forced together until the specimen conforms to a U-shape, and until a wire 3/32 in. in diameter cannot be placed between the specimen and any point on the curvature of the plunger member of the jig. The specimen shall then be removed from the jig and the convex surface examined.

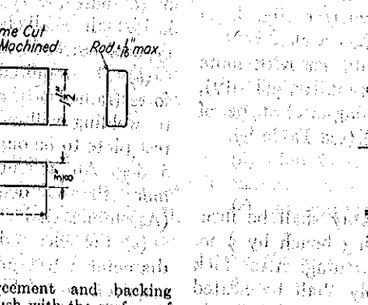

NOTE.—Weld reinforcement and backing strip shall be removed flush with the surface of the specimen. Machining or grinding shall be done lengthwise on the specimen. The surface of the specimen to be tested shall be finely machined or ground.

FIG. 5. —Transverse Face- and Root-Bend Specimens.

Fillet-Weld Test

23. (*a*) Test assemblies, as required in Table V and as detailed in Table VI and Fig. 9, shall be made up using the types of current shown for each size of electrode and welding position shown. (See Fig. 2 for welding positions.) When a classification of electrode permits its use with more than one type of current (or polarity), it shall be tested using each type of current (and polarity).

(*b*) In preparing the two plates forming the test assembly, the standing member shall have one edge machined

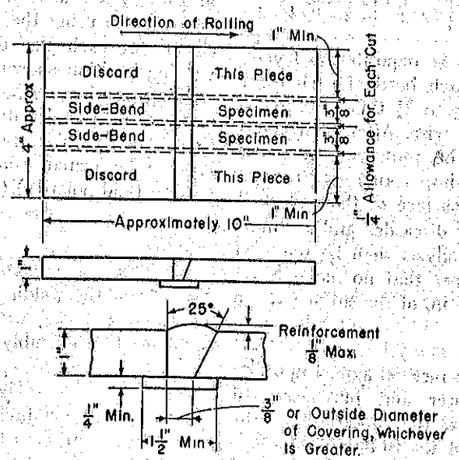

FIG. 6.—Test Joint for Transverse Side-Bend Test.

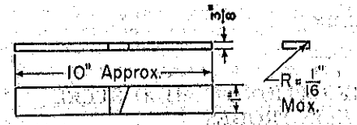

NOTE.—Specimens shall be sawed or machined from test joint. Weld reinforcement and backing strip shall be removed flush with the surface of the specimen. Machining or grinding shall be done lengthwise on the specimen. The surface of the specimen to be tested shall be finely machined or ground.

FIG. 7. —Transverse Side-Bend Specimen.

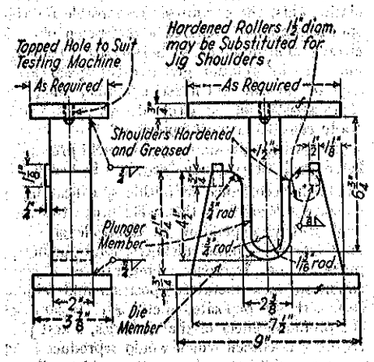

FIG. 8.—Guided-Bend Test Jig.

throughout its length so that when it is set upon the base plate, which shall be straight and smooth, there will be intimate contact for the entire length of the joint.

(*c*) A single-pass fillet weld shall be deposited on one side of the joint. When welding in the vertical position is specified, the progression shall be upward. The first electrode used shall be consumed for its full length except for a stub end of not more than 2 in. Additional electrodes, if necessary, shall then be used to complete the weld for the full length of the joint, consuming each electrode completely as stated above, insofar as permitted by the length of the assembly.

(*d*) After completing the weld on the first side of the joint, the assembly shall be cooled to room temperature (but not less than 60 F) by any convenient means (Note) before commencing to weld on the second side.

TABLE VI.—REQUIREMENTS FOR PREPARATION OF FILLET-WELD TEST ASSEMBLIES.

AWS-ASTM Classification	Diameter, in.	Plate Size, in.[a] Thickness, T	Width, W	Length, L[a]	Position of Welding	Size of Fillet, in.
E6010 and E6011	3/32 and ⅛	not required	...	...	...	...
	5/32	¼	3	12	V and OH	3/16 max
	3/16	3/8	3	18	V and OH	¼ max
	7/32	not required	...	...	...	...
	¼	½	3	18	H	¼ min
	5/16	not required	...	...	...	...
E6012 and E6013	3/16 to ⅛, incl.	not required	...	...	...	...
	5/32	¼	3	12	V and OH	¼ max
	3/16	3/8	3	18	V and OH	5/16 max
	7/32	not required	...	...	...	...
	¼	½	3	18	H	5/16 min
	5/16	½	3	18	H	5/16 min
E6014 and E7014	3/32 and ⅛	not required	...	...	...	...
	5/32	3/8	3	12	V and OH	5/16 max
	3/16	3/8	3	18	H	¼ min
	7/32	not required	...	...	...	...
	¼ and 5/16	½	3	18	H	5/16 min
E6015, E7015, E6016, and E7016	3/32 and ⅛	not required	...	...	...	...
	5/32	3/8	3	12	V and OH	¼ max
	3/16	3/8	3	18	H	5/16 min
	7/32	not required	...	...	...	...
	¼	½	3	18	H	5/16 min
	5/16	not required	...	...	...	...
E6018 and E7018	3/32 and ⅛	not required	...	...	...	...
	5/32	3/8	3	12	V and OH	5/16 max
	3/16	3/8	3	18	H	¼ min
	7/32	not required	...	...	...	...
	¼	½	3	18	H	5/16 min
	5/16	not required	...	...	...	...
E6020	⅛	not required	...	...	...	...
	5/32	3/8	3	18	H	5/32 min
	3/16	3/8	3	18	H	5/16 min
	7/32	not required	...	...	...	...
	¼	½	3	18	H	5/16 min
	5/16	not required	...	...	...	...
E6024, E6027, and E7024	3/32,[b] ⅛	not required	...	...	...	...
	5/32	3/8	3	18	H	5/16 min
	3/16	3/8	3	18	H	¼ min
	7/32	not required	...	...	...	...
	¼	½	3	18	H	5/16 min
E6028 and E7028	⅛	not required	...	...	...	...
	5/32	3/8	3	18	H	5/16 min
	3/16	3/8	3	18	H	¼ min
	7/32	not required	...	...	...	...
	¼	½	3	18	H	5/16 min
E6030	not required	...	...	...	...	...

[a] In the event the end of the deposit made with the first electrode is closer than 4 in. from the end of the test plate, a starting tab or a longer test plate may be used.
[a] See Fig. 9.
[b] E6024 and E7024 only.

NOTE.—If water is used as the coolant, care should be taken to ascertain that it has been thoroughly removed from the joint before welding.

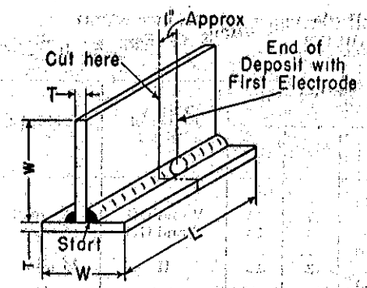

NOTE.—See Table VI for values of T, W, and L.

FIG. 9. —Preparation of Fillet-Weld Test Specimen.

(*e*) The fillet weld on the second side of the joint shall be deposited by the same procedure as was the first weld.

(*f*) The specimen shall be cut at a point approximately 1 in. back from the crater end of the deposit made with the first electrode on the first side of the joint. Either section may be polished and etched to permit examination.

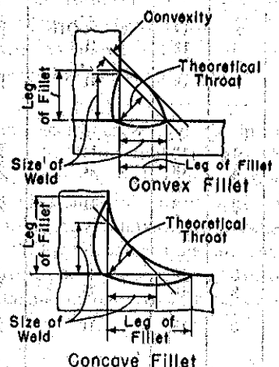

NOTE.—Size of fillet weld = Leg length of largest inscribed isosceles right triangle. Fillet weld size, convexity and leg lengths of fillet welds shall be determined by actual measurement (to nearest $\frac{1}{64}$ in.) on a section laid out with scribed lines as shown.

FIG. 10 —Dimensions of Fillet Welds.

(*g*) The polished and etched section shall be scribed as shown in Fig. 10 and the size, leg lengths, and convexity (of convex fillets) shall be determined to the nearest $\frac{1}{64}$ in. by actual measurement.

APPENDIX

GUIDE TO AWS-ASTM CLASSIFICATION OF MILD STEEL ARC-WELDING ELECTRODES

PART I.—INTRODUCTION

This guide is appended to the specification as a source of information; *it is not mandatory and does not form a part of the specification.*

The applications of the shielded metal-arc-welding process have continued to increase and the consumer has made constant demands on the electrode industry for numerous refinements so that the electrodes would meet his current requirements.

The specification, to which this guide is a supplement, is divided into two parts. Part I describes the characteristics of the electrodes and gives the general requirements. This part is of greater interest to the consumer. Part II gives the details of the tests and is primarily for the manufacturer.

The classification system used in the specification follows the established pattern. The letter E designates an electrode. The first two digits, 60 for example, designate the minimum tensile strength of the deposited metal in the as-welded condition in 1,000 psi. The third digit indicates the position in which the electrode is capable of making satisfactory welds. Thus the "1", as in E6010, means that the electrode is satisfactory for use in all positions (flat, vertical, overhead and horizontal). The "2", as in E6020, indicates that the electrode is suitable for depositing satisfactory welds in the flat position and for making horizontal fillet welds. The "3", as in E6030, indicates that the electrode is suitable only for depositing welds in the flat position. The last digit of the classification indicates the current to be used with the electrode and the type of coating or covering on the electrode as listed in Table I.

Electrodes, regardless of trade name, which meet all of the requirements of any given classification, may be expected to have major characteristics which are very similar if not identical. Certain minor differences continue to exist among brands due to differences in production facilities and the usual differences of opinion that exist in any field regarding specific operating characteristics.

Since the electrodes within a classification have similar operating characteristics and mechanical properties, the consumer can, after determining the classification best fulfilling his application, limit his study of available electrodes to those within that classification.

This specification is not expected to measure all of the characteristics of the electrodes falling within a given classification, but it is expected to measure those of major importance. In some instances, a particular characteristic is common to a number of classifications and it is not necessary to test for it. In other instances, the characteristics may be of such an intangible nature that no adequate test has been developed to measure them. As a result of this condition, a newcomer in the field may find that a study of this specification does not give him all the information he needs to determine the classification best fulfilling his particular needs. Appreciating this, the committee responsible for this specification has prepared a discussion of each classification involved. It is intended to supplement the information given in the specification and to present a concise summary of those characteristics of the electrodes which are generally considered most important.

In viewing this summary, the weld properties listed, and the properties required in test welds made in accordance with this specification, it should be recognized that weld properties may vary widely, depending on electrode size and amperage used, plate thickness, joint geometry, preheat and interpass temperature, surface condition, base metal composition and admixture with the deposited metal, etc. Because of the profound effect of the variables, a test procedure was chosen which would reproduce good practice welding conditions reasonably well and at the same time minimize the most potent variable affecting properties, namely, interpass temperature. This is accomplished through use of the boiling water bath, a specified time for air cooling after deposition of each layer, and definite layer practice. This "Boiling Water Technique" may be questioned as not corresponding to any production practice. It should be recognized, however, that production practices may induce interpass temperatures ranging from subfreezing to many hundred degrees, and that no single temperature can be chosen for tests which will be representative of all production conditions. Properties of production welds may vary accordingly, depending on the particular welding conditions, and may not duplicate or even approach the values listed and prescribed for test welds. For example, ductility in single pass fillets or welds in heavy plate made outdoors in chilly weather may drop to little more than half of that listed and normally obtained. This does not indicate that either the electrodes or welds are inferior to normal, but rather, only that the particular production conditions are more severe than the prescribed test conditions.

It may be noted that Table III (footnotes b and c) provides for a lower yield point or tensile strength, or both, when higher values of elongation are obtained. It is believed that this approach is more realistic and more closely approximates the results obtained when the electrodes are actually used in production.

Another factor which has bearing on the ductility of weld deposits is time. Deposits from most covered electrodes, other than the low hydrogen type, contain considerable absorbed hydrogen. This hydrogen gradually escapes with time, most of it in two to four weeks at room temperature or in 24 hr at 200 to 220 F. As the hydrogen escapes the ductility of the weld metal increases, but the yield point and ultimate tensile strength are relatively unchanged. It is to attain that inherent ductility level in test welds, to avoid discrepancies in testing, and to show service time results, that the specification now calls for aging the test bars at 200 to 220 F for 18 to 24 hr before subjecting them to the tension test.

Under a previous issue of this specification, in which the allowable aging time and temperature were nowhere specified, it was common practice to permit natural aging before pulling the tensile bars. Therefore, the Committee decided to make controlled aging a part of the revised specification, in order to measure the properties of the welds in a rapid, reproducible and specified manner.

Operating and usability characteristics in the various positions are measured by the guided-bend and fillet-weld tests. In the case of the fillet-weld test, it is necessary to obtain both proper fillet-weld profile and complete fusion at the root. Any electrode meeting the fillet-weld test requirements and possessing the proper mechanical properties, as measured by the all-weld-metal tension test, will produce the proper fillet-weld shear strength.

The coverings of the low hydrogen classification of electrodes (EXX15, EXX16, EXX18 and EXX28) may absorb moisture during storage. If necessary to lower the moisture content prior to use in production, some electrodes require a baking temperature as high as 450 to 500 F and a period of time as long as 1 to 3 hr. The manner in which the electrodes have been produced and the relative humidity and temperature conditions under which the electrodes are stored determine the proper length of time and temperature to be used for reconditioning. The manufacturer should be requested to furnish the proper length of time and temperature for this purpose.

The core wire for all the electrodes is usually a rimmed or capped steel containing 0.15 per cent, max, carbon; 0.30 to 0.60 per cent manganese; 0.04 per cent max, sulfur, phosphorus and silicon. The deposited weld metal composition of all the mild steel electrodes are similar with the maximum limits being given in Table II. In general, the E70XX electrodes are slightly higher in manganese and silicon content than the corresponding E60XX classification.

Some of the classifications have iron powder added to their coverings. The iron powder fuses with the core wire and the other covering ingredients as the electrode melts down and it deposits as weld metal, just as does the core wire material. High currents can be used since a considerable portion of the electrical energy passing through the electrode is used to melt the covering and iron powder contained therein. The result is that these electrodes usually have higher deposition rates than their conventional counterparts.

Due to the thick covering and deep arc cup produced, these electrodes can be used very effectively with the covering in contact with the parts being welded, that is, with a "drag" technique. This consists of keeping the electrode covering in contact with the work piece (both legs of fillet welds) at all times, which makes for easy handling. However, an open arc technique is preferable in out-of-position welding and sometimes in making groove welds. Tests conducted to date have been unable to show any significant difference in mechanical properties of one technique over the other.

The descriptions given in Part II of this Appendix cover each classification of electrode in the E60 and E70 Series. Table A has been included to illustrate the differences that might be expected in mechanical properties since the specification shows only minimum requirements.

TABLE A.—MECHANICAL PROPERTIES.[a]

AWS-ASTM Classification	Tensile Strength, 1000 psi,	Yield Strength, 1000 psi,	Elongation in 2 in., per cent	Reduction of Area, per cent	Charpy Keyhole, ft-lb		Charpy V-Notch, ft-lb	
					70 F	−40 F	70 F	−40 F
E6010	60 to 68	48 to 58	22 to 28	35 to 60	30 to 40	15 to 25	50 to 80	10 to 25
E6011	60 to 70	48 to 61	22 to 30	35 to 60	30 to 40	15 to 25	50 to 80	10 to 25
E6012	60 to 78	48 to 65	17 to 22	20 to 40	20 to 30	5 to 15	25 to 55	2 to 10
E6013	60 to 78	48 to 65	17 to 22	25 to 50	25 to 35	5 to 20	30 to 60	5 to 15
E6020 and E6030	60 to 68	48 to 58	25 to 30	40 to 60	25 to 35	15 to 25	40 to 70	10 to 25
E6027	60 to 68	48 to 55	25 to 30	40 to 60	25 to 35	15 to 25	40 to 70	10 to 25
E6014	60 to 72	48 to 60	17 to 25	30 to 50	25 to 35	15 to 25	40 to 70	10 to 25
E7014	70 to 85	58 to 77						
E6015 and E6016	60 to 72	48 to 60	22 to 35	55 to 75	35 to 50	25 to 40	70 to 100	25 to 40
E7015 and E7016	70 to 76	58 to 62						
E6018	60 to 72	48 to 60	22 to 30	55 to 75	35 to 50	25 to 40	70 to 100	25 to 40
E7018	70 to 85	58 to 70						
E6024	60 to 72	48 to 60	17 to 22	20 to 40	25 to 35	10 to 20	30 to 60	5 to 20
E7024	70 to 85	58 to 75						
E6028	60 to 72	48 to 60	22 to 30	55 to 75	35 to 50	25 to 40	70 to 100	15 to 40
E7028	70 to 85	58 to 74						

[a] These are the properties to be expected in the as-welded condition when deposited in accordance with the test procedures prescribed in the specification (see Section 21) and when used at the mid-point of the current range shown in Table B. See also the eighth paragraph of Part I to this Appendix.

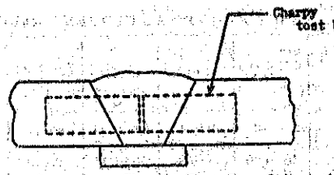

FIG. 11. —Charpy Test Bar Orientation.

Generally, the smaller sizes of electrodes will give higher mechanical properties than the larger sizes of the same classification. The values for impact resistance listed in this table are based on a standard Charpy test bar as described in the Methods for Notched-Bar Impact Testing of Metallic Materials (ASTM Designation: E 23), located with the bar transverse to the weld with the notch vertical in the weld metal. This is shown in Fig. 11 with the test bar superimposed on the all-weld-metal tension test plate of Fig. 3 of this specification.

The inclusion of the E70XX electrodes in this specification has been accomplished to acknowledge and more realistically define the higher strength levels obtainable with many of the iron powder and low hydrogen type electrodes as well as to satisfy the industry demand for a non-alloyed 70,000 psi minimum tensile strength electrode. Unlike the E70XX classification in the Specification for Low Alloy Steel Covered Arc-Welding Electrodes (AWS A5.5; ASTM A 316), these electrodes do not contain alloys as a result of a deliberate addition (as defined in Table II). Further, they do not require that the minimum tensile properties be met after stress relieving; that is, the 70,000 psi tensile strength requirements are specified in the as-welded, accelerated aged condition.

Table B gives current ranges which are satisfactory for most brands. When used for welding vertically upward, currents near the lower limit of the range are generally used.

PART II.—DESCRIPTION AND INTENDED USE OF ELECTRODES

E6010 Electrodes.—Classification E6010 electrodes are designed to produce the best possible mechanical properties consistent with good usability characteristics in all welding positions. They are characterized by a deeply penetrating, forceful, spray-type arc and readily removable, thin, friable slag which may not seem to completely cover the deposit. Fillet welds are usually relatively flat in profile and have a rather coarse, unevenly spaced ripple. The covering is high in cellulose, usually exceeding 30 per cent by weight. The other materials generally used in the covering include titanium dioxide, various types of magnesium or aluminum silicates, metallic deoxidizers such as ferromanganese and liquid sodium silicate. Because of the covering composition these electrodes are generally classified as the high cellulose sodium type.

TABLE B.—TYPICAL CURRENT RANGES IN AMPERES FOR ELECTRODES.

Electrode Diameter, in.	E 6010 and E 6011	E 6012	E 6013	E 6020 and E 6030	E 6027	E 6014 and E 7014	E 6015, E 6016, E 7015, and E 7016	E 6018 and E 7018	E 6024, E 6028, E 7024, and E 7028
1/16	...	20 to 40	20 to 40	...	...	...	...	...	...
5/64	...	25 to 60	25 to 60	...	...	...	...	...	...
3/32	40 to 80	35 to 85	45 to 90	...	...	80 to 125	65 to 110	70 to 100	100 to 145[a]
1/8	75 to 125	80 to 140	80 to 130	100 to 150	125 to 185	110 to 160	100 to 150	115 to 165	140 to 190
5/32	110 to 170	110 to 190	105 to 180	130 to 190	160 to 240	150 to 210	140 to 200	150 to 220	180 to 250
3/16	140 to 215	140 to 240	150 to 230	175 to 250	210 to 300	200 to 275	180 to 255	200 to 275	230 to 305
7/32	170 to 250	200 to 320	210 to 300	225 to 310	250 to 350	260 to 340	240 to 320	260 to 340	275 to 365
1/4	210 to 320	250 to 400	250 to 350	275 to 375	300 to 420	330 to 415	300 to 390	315 to 400	335 to 430
5/16	275 to 425	300 to 500	320 to 430	340 to 450	...	390 to 500	375 to 475	375 to 470	...

[a] These values do not apply to the E6028 and E7028 classifications.

This classification (or E6011) is recommended for all-position work where the quality of the deposit is of greatest importance, particularly on multiple-pass applications in the vertical and overhead positions, where radiographic requirements must be met.

The majority of its applications are on mild steel. However, it has been used to advantage on galvanized plate and on some low-alloy steels. Typical applications include shipbuilding, structures such as buildings and bridges, storage tanks, piping, and pressure vessel fittings. Since its applications are so widespread, a discussion of each is impractical. Sizes larger than 5/16 in. are not generally used in all positions.

Generally speaking, the maximum currents that can be used with the larger sizes of this type of electrode are somewhat limited as compared to other classifications due to the high spatter loss that occurs with high currents.

E6011 Electrodes.—Classification E6011 electrodes are designed to duplicate the usability characteristics and mechanical properties of the E6010 classification using ac as the source of power. Although also usable with dc, reverse polarity, a sacrifice in usability characteristics will be noted when compared to the E6010 electrode. Penetration, arc action, slag and fillet-weld appearance are very similar to that of the E6010 classification of electrode.

The covering is also high in cellulose and is designated as the high cellulose potassium type. In addition to the other ingredients usually found in the E6010 electrode coverings, small quantities of calcium and potassium are usually present.

Like the E6010 electrodes, sizes larger than 5/16 in. are not generally used in all positions. The current and voltage ranges usually recommended are identical to those of the E6010 electrode. As in the case of E6010 electrodes, high currents result in high spatter loss.

Usually the ductility, tensile strength, and yield strength are higher than obtained with E6010 electrodes.

E6012 Electrodes.—The E6012 classification of electrode is characterized by medium penetration, a rather quiet type of arc, slight spatter, and dense slag completely covering the deposit. The covering is high in titania, usually exceeding 35 per cent by weight, which accounts for its usually being referred to as the titania or rutile type. In addition, the covering usually contains various silicious materials such as feldspar and clay, small amounts of cellulose, ferromanganese, and sodium silicate as a binder. Also, small amounts of calcium compounds may be used to produce satisfactory arc characteristics on straight polarity. Whereas single pass welds may meet radiographic requirements, multipass welds fall far short.

Generally speaking, fillet welds tend to be convex in profile, having a smooth, even ripple in the horizontal position and a widely spaced convex ripple in the vertical position which becomes smoother and more uniform as the size of the weld is increased. Ordinarily, a larger size fillet must be made in the vertical and overhead positions than with classifications E6010 and E6011 electrodes of the same diameter, if good fusion and profile are to be obtained.

Although E6012 is an all-position electrode, far greater tonnages of it are used in the flat and horizontal positions than in the vertical and overhead positions. It is especially recommended for single-pass, high-speed, high-current, horizontal fillet welds. Ease of handling, good fillet weld profile, and ability to withstand high current and to bridge gaps under conditions of poor fit-up make it very well suited to this type of work. When used for vertical and overhead welding, the electrode size used is frequently one size smaller than would be used if an E6010 or E6011 electrode were used.

This electrode has been used to advantage on many low-alloy steels, particularly of the higher carbon varieties. This is probably due to the fact that the penetration obtained, although adequate, is by no means that obtained with the E6010 or E6011 classification. As a result, the pickup of alloying ingredients is not as great, which undoubtedly has a beneficial effect from the standpoint of cracking.

The weld metal deposited by this electrode is lower in ductility and higher in yield strength than weld metal from either the E6010 or E6011 classification of electrodes.

E6013 Electrodes.—The E6013 classification of electrode, although very similar to the E6012, possesses some worthwhile differences. Slag removal is somewhat better and the arc can be established and maintained more readily, particularly in the case of the small diameters (1/16, 5/64, and 3/32 in.) thus permitting satisfactory operation with lower open-circuit voltage. Originally this type of electrode was designed specifically for light sheet metal work. However, the larger diameters are being used on many applications previously welded with classification E6012 electrode. Even less penetration is obtained than with the E6012 classification of electrode.

The coverings used are very similar to those of the classification E6012 electrode containing rutile, silicious materials, cellulose, ferromanganese, and liquid silicate binders. An important difference is that easily ionized materials are incorporated in the covering which permits the establishment and maintenance of an arc with alternating current at low welding currents and low open-circuit voltages.

It is similar to the E6012 classification in operation and appearance of deposit. The arc action tends to be quieter, the bead surface smoother and with a finer ripple. The different brands of E6013 have varied characteristics. Some of these electrodes are usually recommended for sheet metal applications where their ability to weld satisfactorily in the vertical position from the top down is an advantage. Others with a more fluid slag are in part replacing E6012 electrodes for horizontal fillet welds and other general purpose welding. Rather than the convex contour, characteristic of the classification E6012 electrodes, they produce a flat fillet weld similar to that of the E6020 classification of electrodes. They are also readily usable in making groove welds, because of the concave bead shape and easily removed slag. In addition, the weld metal is definitely freer of slag and oxide inclusions than E6012 weld metal.

Ordinarily the high welding currents possible with the classification E6012 electrode cannot be used. When welding in the vertical and overhead positions, however, the current and voltage will be very similar.

E6014 and E7014 Electrodes.—The E6014 classification has a covering of materials similar to E6012 and E6013 electrodes with the addition of iron powder. The amount of covering and the percentage of iron powder in the covering are usually less than those of E6024 electrodes.

The characteristics of the E6014 electrodes are a compromise between the E6013 and E6024 electrodes. The deposition rate is higher than the E6013 but is not as high as obtained with E6024 electrodes. The amount and character of the slag permits the E6014 electrode to be used in all position welding, and it is therefore more versatile than the E6024 electrodes.

The E6014 electrodes are suitable for welding mild and low alloy steels. Typical weld beads are smooth with fine ripples. Penetration is approximately the same as E6012 which is advantageous when welding over gaps due to poor fit-up. The profile of fillet welds tends to be flat to slightly convex. The slag is easily removed, self-cleaning in many cases.

The usable currents for E6014 electrodes are higher than for E6012 and E6013 types of electrodes.

E6015 and E7015 Electrodes.—The E6015 and E7015 classification are d-c reverse polarity electrodes with coverings high in limestone and other ingredients low in hydrogen content which form a basic slag. They were developed for welding higher strength, high-carbon, alloy steels in which the ordinary electrodes produce phenomena known as "underbead cracking." These underbead cracks occur in the base metal usually just below the weld metal and are caused by the hydrogen absorbed from the arc atmosphere. The elimination of hydrogen with its consequent underbead cracking permits the welding of "difficult to weld steels" with less preheat than other types of electrodes, thus making for better welding conditions. Although these cracks do not occur in ordinary steels, they may occur whenever an ordinary electrode is used on high tensile steels.

Another use for the E6015 classification of electrode is the welding of high sulfur steels. The ordinary electrode deposit on these steels (which contain 0.10 to 0.25 per cent sulfur) is badly honey-combed. The E6015 classification of electrode can be used to weld these steels without any difficulty.

The arc is moderately penetrating, the slag heavy, friable, and easily removed, and the deposited metal lies in a flat bead or may even be slightly convex.

E6015 electrodes are used in all positions up to and including 5/32 in. in diameter. The larger diameters are useful for fillet welds in the horizontal and flat positions.

Generally speaking, the currents used with these electrodes are higher than those recommended for E6010 electrodes of the same diameter. It is recommended that as short an arc as possible be maintained for all positions of welding in order to get best results.

The as-welded mechanical and impact properties of deposits, made using the low hydrogen type electrodes, have been found to be superior to those of E6010 and E6011 electrodes. Numerous tests have indicated the as-welded mechanical and impact properties of deposits from these electrodes to approach the properties of stress-relieved deposits of conventional electrodes. Whereas the ductility of deposits of conventional electrodes are materially improved when they are stress relieved, the deposits of low-hydrogen electrodes are changed only slightly. The reduced tendenc, for underbead cracking and the high quality of as-welded deposits of these electrodes should materially reduce the necessity of preheat and postheat of weldments, thus making for better welding conditions.

This electrode was originally developed for the welding of hardenable steels and, in addition to its use on alloy steels, high-carbon steels, and high-sulfur steels, it has been found useful on malleable iron, spring steels, and the mild steel side of clad plates. Another extensive use has been in the welding of steels which will subsequently be enameled and in all those steels which contain selenium.

E6016 and E7016 Electrodes.—The E6016 and E7016 classifications have all of the characteristics of the E6015 and E7015. The core wire and covering are very similar except for the use of a certain amount of potassium silicate or other potassium salts in the coverings of the E6016 and E7016 classifications to facilitate their use on ac.

All that has been said of the E6015 and E7015 electrode applies equally well to the E6016 and E7016.

E6018 and E7018 Electrodes.—The E6018 and E7018 classifications of electrode have a covering containing a high percentage of iron powder in combination with low hydrogen ingredients similar to those commonly used in E6015 and E6016 electrodes. As a rule, the coverings on these electrodes are slightly thicker than those of the E6015 and E6016 electrodes. The iron powder in the covering usually amounts to between 25 and 40 per cent of the covering weight.

These are d-c reverse polarity and a-c electrodes of the low hydrogen type. They are designed for the same application as the E6015 and E7015 type. In common with all low hydrogen electrodes, a short arc should be maintained at all times.

In addition to their use for mild steel, the E6018 and E7018 electrodes are well suited for fillet welds in high strength high carbon or alloy steels. The fillet welds made in the horizontal and flat position are slightly convex in profile, with a smooth and finely rippled surface. The electrodes are characterized by, a smooth quiet arc, very low spatter, low penetration, and can be used at high lineal speeds.

E6020 Electrodes.—The E6020 classification of electrode having a high iron-oxide sodium type covering is designed to produce flat or slightly concave horizontal fillet welds with either ac or dc, straight polarity, and will produce satisfactory results on fillet and groove welds in the flat position with ac or dc, either polarity. It is characterized by a spray-type arc and a heavy slag, well honey-combed on the under side, which completely covers the deposit and can be readily removed.

When normal welding currents and techniques are employed, penetration is considered to be medium. However, it is capable of operating satisfactorily at high currents which results in deep penetration, particularly when such a technique is employed as in deep fillet welding. Of all the types of electrodes produced, this is generally considered to be the best for this specialized procedure.

This is essentially a mineral-covered electrode having a high percentage of iron oxide, manganese compound, and silica in the covering along with sufficient alloys to give a deposit of the desired composition. The slag coverage is so extensive and the slag-metal reaction of such a nature that the electrode does not normally depend on gaseous protection. The covering is such that an iron-oxide, manganese-oxide, silica slag is usually produced. Other material such as aluminum, magnesium, or sodium may be present to modify the slag. Ferromanganese is used as the main deoxidizer; sodium silicate is used as the binder. Quantities of basic oxide, acid silica, and silicates and deoxidizers must be carefully controlled to produce satisfactory operation and good weld metal.

Fillet welds tend to have a flat or concave profile and a smooth, even ripple. In many cases the surface of the deposit is dimpled. This characteristic is effected by atmospheric conditions. This is to say, the more restricted the opening in which the metal is deposited, the greater tendency towards dimples. It is to be expected in practically all cases on the first few passes of deep groove welds. As the weld nears completion, this tendency decreases. Many have noted the fact that the use of ac tends to promote this dimpled condition to a greater extent than dc. No undesirable mechanical or physical defects are associated with this surface condition.

Generally speaking, this electrode is recommended for horizontal fillet welds and flat-position welds where radiographic requirements must be met. High deposition rates can be obtained on such welds in heavy plate. Usually this type of electrode is not used on thin sections due to increased warpage resulting from the use of the higher currents usually employed.

When making horizontal fillet welds using the conventional technique, current values nearer the lower end of the range indicated should be employed if undercutting is to be held to a minimum. If the deep fillet welding technique is employed, the higher currents are used.

Applications include pressure vessels, heavy machine bases, and structural parts, where thickness of section permits.

E6024 and E7024 Electrodes.—The E6024 classification of electrode has a covering containing a high percentage of iron powder in combination with ingredients similar to those commonly used in E6012 and E6013 electrodes. As a rule, the coverings on E6024 electrodes are very heavy, usually amounting to about 50 per cent of the covered electrode weight.

The E6024 and E7024 electrode is well suited for making fillet welds in mild steel. The welds are slightly convex in profile, with a very smooth surface and extremely fine ripple. The electrode is characterized by a smooth quiet arc, very low spatter, low penetration, and can be used at high lineal speed.

This classification operates with ac or dc, either polarity. The E6024 type, although most generally used on mild steel, also produces satisfactory welds on many low alloy, medium and high carbon steels.

E6027 Electrodes.—The E6027 classification electrode has a covering containing a high percentage of iron powder in combination with ingredients similar to those commonly found in E6020 electrodes. As a rule, the coverings on E6027 electrodes are very heavy, usually amounting to about 50 per cent of the covered electrode weight.

The E6027 electrode is designed to produce satisfactory fillet or groove welds in the flat position with ac or dc, either polarity, and will produce flat or slightly concave horizontal fillet welds with either ac or dc, straight polarity.

This classification has a spray type metal transfer and deposits metal at high lineal speeds. Penetration is medium and spatter loss is very low. The covering on this type produces a heavy slag, honeycombed on the under side, which covers the weld deposit, and is quite friable and easy to remove.

Welds produced with the E6027 electrode have a flat to slightly concave profile with a smooth, fine, even ripple and with good metal wash up the sides of the joint. The weld metal

possesses excellent radiographic quality. High currents can be used since a considerable portion of the electrical energy passing through the electrode is used to melt the covering and the iron powder contained therein. The electrode is well suited to the welding of fairly heavy sections.

E6028 and E7028 Electrodes.—The E6028 electrode is in many respects very much like the E6018. The E6028 differs from the E6018 (and the E7028 similarly from the E7018) in the following respects:

(*1*) The E6018 is an all position electrode; whereas, the E6028 is suitable for horizontal fillet and flat position welding only.

(*2*) The covering of the E6028 electrode is much thicker than that of the E6018; the covering of E6028 electrodes represents approximately 50 per cent of the weight of the electrode. The iron content of the E6028 covering is higher than that of the E6018. As a consequence, in horizontal fillet and flat position welding the E6028 gives a higher deposition rate than the E6018 for any given size of electrode. The iron powder content of the E6028 covering represents about 50 per cent of the weight of the covering.

(*3*) The E6028 has a spray type transfer; the E6018, a globular type transfer.

(*4*) The ratio of the weight of the weld metal to the weight of the core wire consumed is about 1.05 minimum for the E6018 and about 1.30 minimum for the E6028.

Apart from the above differences, all that has been said about the E6018 and E7018 electrodes applies equally as well to the E6028 and E7028 types.

E6030 Electrodes.—Any electrode designed to fulfill the requirements of the E6020 classification will also fulfill the requirements of the E6030 classification. There are certain other electrodes with which horizontal fillet welding is impractical, if not impossible, but which do operate satisfactorily in the flat position and possess some advantages. As a result, the E6030 classification is necessary.

Since the E6020 classification of electrodes have already been described, the description herein will involve only the E6030 electrode classification which has been designed primarily for use in narrow groove welds.

The slag produced, although small in amount and less fluid, is adequate to completely cover the deposit in all passes of groove welds except the last one or two. It tends to be more dense than the E6020 classification, but is just as readily removed. When using dc, best results are usually obtained on reverse polarity. Generally speaking, this type of electrode is capable of showing higher deposition rates than the E6020 classification.

The coverings employed are similar to those of the E6020 classification except that measures are taken to reduce the amount of fluidity of the slag, thus decreasing the possibility of slag interference in confined spaces. The slag is again essentially an iron-oxide, manganese-oxide, silicon combination with alumina, magnesium and sodium oxide, and other modifiers. In some electrodes, substantial amounts of cellulose are present. Ferromanganese is the principal deoxidizer, although other metals and ferroalloys are sometimes used. Again, sodium silicate is used as the binder. As with the E6020, alloys are usually added to the covering to give a deposit of the desired composition.

Each layer of fillet or groove weld has a concave profile and a smooth, even ripple. The tendency for the surface of the deposit to be dimpled is not as pronounced as in the case of E6020 electrodes.

This type of electrode is recommended for welding heavy plate in the flat position only. Like the E6020 type, it is useful where radiographic requirements must be met. Applications include pressure vessels, heavy machine bases and structural parts where thickness of the section permits. Of these, probably the greatest tonnage is used in the construction of pressure vessels where narrow, deep grooves are the rule rather than the exception.

SPECIFICATION FOR CORROSION-RESISTING CHROMIUM AND CHROMIUM-NICKEL STEEL PLATE, SHEET, AND STRIP FOR FUSION-WELDED UNFIRED PRESSURE VESSELS

SA-240

(IDENTICAL WITH ASTM SPECIFICATION A 240-61T)

Scope

1. This specification covers soft, corrosion-resisting chromium and chromium-nickel steel plate, sheet, and strip for fusion-welded unfired pressure vessels.

Descriptions of Terms

2. The terms plate, sheet, and strip as used in this specification are described as follows:

Plate.—Material $\frac{3}{16}$ in. and over in thickness and over 10 in. in width.

Sheet.—Material under $\frac{3}{16}$ in. in thickness and 24 in. and over in width. Material under $\frac{3}{16}$ in. in thickness and in all widths with No. 3 to No. 8 finishes, inclusive.

Strip.—Material under $\frac{3}{16}$ in. in thickness and under 24 in. in width.

Basis of Purchase

3.(*a*) Orders for material under this specification shall include the following information:

(*1*) Quantity (weight or number of pieces),

(*2*) Name of material (corrosion-resisting chromium-nickel steel),

(*3*) Form (plate, sheet, or strip),

(*4*) Dimensions,

(*5*) Type (Table I),

(*6*) Edge (for strip only),

(*7*) Finish (Sections 9, 10, 11), for sheet specify whether one or both sides are to be polished,

(*8*) ASTM Designation,

(*9*) Exceptions to the specification or special requirements,

(*10*) Intergranular corrosion test (Section 15 (when required, and

(*b*) If possible, the intended end use of the item should be given on the purchase order especially when the item is ordered for a specific end use or uses. Such information will enable the manufacturer to produce a material more satisfactory for the purchaser's process and product.

NOTE 1.—A typical ordering description is as follows: 200 pieces, corrosion-resisting chromium-nickel steel sheets, 0.060 by 48 by 120 in., Type 304, No. 2D Finish, ASTM A 240 – 61 T.

TABLE I.—CHEMICAL REQUIREMENTS.

Type	Carbon,[a] max, per cent	Manganese, max, per cent	Phosphorus, max, per cent	Sulfur, max, per cent	Silicon, max, per cent	Chromium, per cent	Nickel per cent	Other Elements
302	0.15	2.00	0.045	0.030	1.00	17.00 to 19.00	8.00 to 10.00	
304	0.08	2.00	0.045	0.030	1.00	18.00 to 20.00	8.00 to 12.00	
304L	0.03	2.00	0.045	0.030	1.00	18.00 to 20.00	8.00 to 12.00	
305	0.12	2.00	0.045	0.030	1.00	17.00 to 19.00	10.00 to 13.00	
309S	0.08	2.00	0.045	0.030	1.00	22.00 to 24.00	12.00 to 15.00	
310S	0.08	2.00	0.045	0.030	1.50	24.00 to 26.00	19.00 to 22.00	
316	0.08	2.00	0.045	0.030	1.00	16.00 to 18.00	10.00 to 14.00	Mo 2.00 to 3.00
316L	0.03	2.00	0.045	0.030	1.00	16.00 to 18.00	10.00 to 14.00	Mo 2.00 to 3.00
317	0.08	2.00	0.045	0.030	1.00	18.00 to 20.00	11.00 to 15.00	Mo 3.00 to 4.00
317L	0.03	2.00	0.045	0.030	1.00	18.00 to 20.00	11.00 to 15.00	Mo 3.00 to 4.00
321	0.08	2.00	0.045	0.030	1.00	17.00 to 19.00	9.00 to 12.00	Ti 5 × C min; 0.70 max
347	0.08	2.00	0.045	0.030	1.00	17.00 to 19.00	9.00 to 13.00	Cb + Ta 10 × C min; 1.10 max
348	0.08	2.00	0.045	0.030	1.00	17.00 to 19.00	9.00 to 13.00	Cb + Ta 10 × C min; 1.10 max; Ta 0.10 max; Co 0.20 max
405	0.08	1.00	0.040	0.030	1.00	11.50 to 14.50	0.60 max	Al 0.10 to 0.30
410	0.15	1.00	0.040	0.030	1.00	11.50 to 13.50	0.75 max	
410S	0.08	1.00	0.040	0.030	1.00	11.50 to 13.50	0.60 max	
430A	0.12	1.00	0.040	0.030	1.00	14.00 to 16.00	0.75 max	
430B	0.12	1.00	0.040	0.030	1.00	16.00 to 18.00	0.75 max	

[a] The carbon analysis shall be reported to the nearest 0.01 per cent.

Process

4. The steel shall be made by the electric-arc or electric-induction process.

Heat Treatment

5. (*a*) The chromium steels (series 400) shall be heat treated in such a manner as to satisfy all the requirements for mechanical properties prescribed in Sections 13 and 14.

(*b*) The chromium-nickel steels (series 300) shall be heat treated to meet the mechanical property requirements of the specification and be capable of meeting the test for resistance to intergranular corrosion prescribed in Section 15.

Chemical Composition

6. The steel shall conform to the requirements as to chemical composition prescribed in Table I.

Ladle Analysis

7. An analysis of each melt shall be made by the manufacturer to determine the percentages of the elements specified in Table I. The analysis shall be made from a test sample taken during the pouring of the heat. The chemical composition thus determined shall be reported to the purchaser, or his representative, and shall conform to the requirements specified in Table I.

Check Analysis

8. If check analysis is specified by the purchaser, a sample for the analysis shall be taken from the finished material or from a broken test specimen. The chemical composition thus determined shall conform to the requirements specified in Table I.

Finish for Sheet

9. (*a*) The various types of finish procurable on sheet products shall be as follows:

No. 1 Finish.—Hot-rolled, annealed, and descaled.

No. 2D Finish.—Dull, cold-rolled finish.

No. 2B Finish.—Bright, cold-rolled finish.

No. 3 Finish.—Intermediate polished finish.

No. 4 Finish.—General purpose, polished finish.

No. 6 Finish.—Dull satin finish, Tampico brushed, one or both sides.

No. 7 Finish.—High luster finish.

No. 8 Finish.—Mirror finish.

NOTE 2.—*Explanation of Finish:*

No. 1.—Produced on hand sheet mills by hot rolling to specified thicknesses following by annealing and descaling. Generally used in industrial applications, such as for heat or corrosion resistance, where smoothness and uniformity of finish is not of particular importance.

No. 2D.—Produced on either hand sheet mills or continuous mills by cold rolling to the specified thickness, annealing and descaling. The dull finish may result from the descaling or pickling operation or may be developed by a final light cold-rolled pass on dull rolls. The dull finish is favorable for the retention of lubricants on the surface in deep drawing operations. This finish is generally used in forming deep drawn articles which may be polished after lubrication.

No. 2B.—Commonly produced the same as No. 2D, except that the annealed and descaled sheet receives a final light cold-rolled pass on polished rolls. This is a general purpose cold-rolled finish. It is commonly used for all but exceptionally difficult deep drawing applications. This finish is more readily polished than No. 1 or No. 2D finish.

No. 3.—For use where a semifinished polished surface is required for subsequent finishing operations following fabrication. Where sheets or articles made from it will not be subject to additional finishing or polishing operations, No. 4 finish is recommended.

No. 4.—Widely used for restaurant equipment, kitchen equipment, store fronts, dairy equipment, etc. Following initial grinding with coarser abrasives, sheets are generally finished last with abrasives approximately 120 to 150 mesh.

No. 6.—Has a lower reflectivity than No. 4 finish. It is produced by Tampico brushing No. 4 finish sheets in a medium of abrasive and oil. It is used for architectural applications and ornamentation where a high luster is undesirable; it is also used effectively to contrast with brighter finishes.

No. 7.—Has a high degree of reflectivity. It is produced by buffing of finely ground surface but the grit lines are not removed. It is chiefly used for architectural and ornamental purposes.

No. 8.—Is the most reflective finish that is commonly produced. It is obtained by polishing with successively finer abrasives and buffing extensively with very fine buffing rouges. The surface is essentially free of grit lines from preliminary grinding operations. This finish is most widely used for press plates, as well as small mirrors and reflectors.

(*b*) Sheets can be produced with one or two sides polished. When polished on one side only, the other side may be rough ground in order to obtain the necessary flatness.

Finish for Strip

10. The various types of finish procurable on cold-rolled strip products shall be as follows:

No. 1 Finish.—Cold-rolled to specified thickness, annealed and pickled.

No. 2 Finish.—Same as No. 1 finish, followed by a final light cold-rolled pass, generally on highly polished rolls.

NOTE 3.—*Explanation of Finish:*

No. 1.—Appearance of this finish varies from a dull gray matte finish to a fairly reflective surface, depending largely upon composition. This finish is used for severely drawn or formed parts as well as for applications where the brighter No. 2 finish is not required, such as in parts for heat resistance.

No. 2.—This finish has a smoother and more reflective surface, the appearance of which varies with composition. This is a general purpose finish, widely used for household and automotive trim, tableware, utensils, trays, etc.

Finish for Plate

11. The types of finish procurable on plates shall be as follows:

Hot-Rolled, Annealed or Heat Treated.—Scale not removed. Use of plates in this condition is generally confined to heat-resisting applications. Scale impairs corrosion resistance.

Hot-Rolled, Annealed or Heat Treated, Blast Cleaned or Pickled.—Condition and finish commonly preferred for corrosion-resisting and most heat-resisting applications.

Hot-Rolled, Annealed or Heat Treated, Surface Cleaned and Polished.—Polish finish is generally No. 4 finish.

Edges for Cold-Rolled Strip

12. The various types of edges procurable shall be as follows:

No. 1 Edge.—Rolled edge, either round or square as specified.

No. 3 Edge.—An edge produced by slitting.

No. 5 Edge.—Approximately square edge produced by rolling or filing after slitting.

Mechanical Properties

13. (*a*) The material shall conform to the mechanical property requirements prescribed in Table II.

(*b*) Between the yield strength and fracture of the test specimen, the tests shall be conducted at a constant strain rate between $\frac{1}{8}$ and $\frac{1}{2}$ in. per in. per min, inclusive, or at a crosshead speed which will give a strain rate within this range. For the purpose of this specification, the rate of strain may be determined by a strain rate pacer, indicator, or controller, or by dividing the unit elongation by the elapsed time from yield strength to fracture.

Bending Properties

14. (*a*) The bend test specimens shall stand being bent cold through the angle specified in Table II without cracking on the outside of the bent portion.

(*b*) Material up to and including $\frac{3}{8}$ in. in thickness shall be bent over a single piece of flat stock of the same thickness as the material tested, allowing the test material to form its natural curvature.

NOTE 4.—The bend may be made over a diameter equal to the thickness of the test material.

(*c*) Material over $\frac{3}{8}$ in. in thickness shall be bent over two pieces of flat stock, of the same thickness as the material tested, allowing the test material to form its natural curvature.

NOTE 5.—The bend may be made over a diameter equal to two times the thickness of the test material, or over a single piece of flat stock twice the thickness of the test material.

TABLE II.—MECHANICAL PROPERTY REQUIREMENTS.

Type	Tensile Strength, min, psi	Yield Strength min, psi[a]	Elongation in 2 in., min, per cent	Hardness Number, max[b]		Cold Bend, deg[c]
				Brinell	Rockwell B	
302	75 000	30 000	40.0	202	88	not required
304	75 000	30 000	40.0	202	88	not required
304L	70 000	25 000	40.0	202	88	not required
305	70 000	25 000	40.0	202	88	not required
309S	75 000	30 000	40.0	217	95	not required
310S	75 000	30 000	40.0	217	95	not required
316	75 000	30 000	40.0	217	95	not required
316L	70 000	25 000	40.0	217	95	not required
317	75 000	30 000	35.0	217	95	not required
317L	75 000	30 000	35.0	217	95	not required
321	75 000	30 000	40.0	202	88	not required
347	75 000	30 000	40.0	202	88	not required
348	75 000	30 000	40.0	202	88	not required
405	60 000	25 000	20.0	202	88	180
410	65 000	30 000	20.0	202	88	180
410S	60 000	30 000	22.0[d]	202	88	180
430A	65 000	30 000	22.0[d]	202	88	180
430B	65 000	30 000	22.0[d]	202	88	180

[a] Yield strength shall be determined by the offset method at 0.2 per cent limiting permanent set in accordance with the Methods E 8. An alternate method of determining yield strength may be based on a total extension under load of 0.5 per cent.

[b] Either Brinell or Rockwell B hardness is permissible.

[c] See Section 9. Bend test not required for steels of the 300 series.

[d] Material 0.050 in. and under in thickness (U.S. gage No. 18 and under) shall have a minimum elongation of 20.0 per cent.

TABLE III.—THICKNESS TOLERANCES FOR HOT-ROLLED AND COLD-ROLLED SHEETS.

Specified Thickness, in.[a]	Tolerance, Over and Under, in.
Over 0.145 to less than $\frac{3}{16}$ in.	0.014
Over 0.130 to 0.145, incl.	0.012
Over 0.114 to 0.130, incl.	0.010
Over 0.098 to 0.114, incl.	0.009
Over 0.083 to 0.098, incl.	0.008
Over 0.072 to 0.083, incl.	0.007
Over 0.058 to 0.072, incl.	0.006
Over 0.040 to 0.058, incl.	0.005
Over 0.026 to 0.040, incl.	0.004
Over 0.016 to 0.026, incl.	0.003
Over 0.007 to 0.016, incl.	0.002
Over 0.005 to 0.007, incl.	0.0015
0.005	0.001

[a] Thickness measurements are taken at least $\frac{3}{8}$ in. from the edge of the sheet.

TABLE IV.—WIDTH AND LENGTH TOLERANCES FOR HOT-ROLLED AND COLD-ROLLED RESQUARED SHEETS (STRETCHER LEVELED STANDARD OF FLATNESS).[a]

Specified Dimensions	Tolerance, in.	
	Over	Under
For thicknesses under 0.131 in.:		
Widths up to 48 in., excl.	$\frac{1}{16}$	0
Widths 48 in. and over	$\frac{1}{8}$	0
Lengths up to 120 in., excl.	$\frac{1}{16}$	0
Lengths 120 in. and over	$\frac{1}{8}$	0
For thicknesses 0.131 in. and over:		
All widths and lengths	$\frac{1}{4}$	0

[a] Polished sheets with finishes No. 4 and higher are produced to tolerances given in this table.

(*d*) The axis of the bend shall be parallel to the direction of rolling.

Special Tests

15. (*a*) If any special tests are required which are thought to be pertinent to the intended application of the material ordered, they shall be as agreed upon between the manufacturer and the purchaser.

TABLE V.—WIDTH, LENGTH, AND CAMBER TOLERANCES FOR HOT-ROLLED AND COLD-ROLLED SHEETS NOT RESQUARED.

WIDTH TOLERANCES

Specified Thickness, in.	Tolerance, for Specified Width, in.	
	24 to 48, excl	48 and Over
Less than $\frac{3}{16}$	$\frac{1}{16}$ over, 0 under	$\frac{1}{8}$ over, 0 under

LENGTH TOLERANCES

Specified Length, ft.	Tolerance, in.	
	Over	Under
Up to 10, incl.	$\frac{1}{4}$	0
Over 10 to 20, incl.	$\frac{1}{2}$	0

CAMBER TOLERANCES[a]

Specified Width, in.	Tolerance per Unit Length of any 8 ft, in.
24 to 36, incl.	$\frac{1}{8}$
Over 36	$\frac{3}{32}$

[a] Camber is the greatest deviation of a side edge from a straight line, the measurement being taken on the concave side with a straight edge.

(*b*) The intergranular corrosion test is not required unless it is specified on the purchase order. If so specified, it shall be performed by the manufacturer on sensitized specimens of types 304L, 316L, 317L, 321, 347 and 348, and in the case of other chromium-nickel steels (series 300) on specimens representative of the material in the annealed condition. All flat-rolled products of the chromium-nickel series (series 300) in thickness up to and including 2 in. shall be capable of passing the intergranular corrosion test in the as shipped condition. In the case of heavier plates of types other than 304L, 316L, 317L, 321, 347 and 348 the applicability of this test shall be a matter for negotiation by the manufacturer and the purchaser.

Test Specimens

16. (*a*) Tension test specimens shall be taken from material after final heat treatment, and shall be selected in either the longitudinal or transverse direction. The tension test specimens shall conform to Sections 6, 7, or 8 of the Methods of

TABLE VI.—FLATNESS TOLERANCES FOR HOT-ROLLED AND COLD-ROLLED SHEETS.

Sheets Not Specified to Stretcher Leveled Standard of Flatness (Exclusive of Dead Soft and Deep Drawing Sheets).

Specified Thickness, in.	Width, in.	Flatness Tolerance (Max Deviation from a Horizontal Flat Surface), in.
0.062 and over	To 60, incl	1/2
	Over 60 to 72, incl	3/4
	Over 72	1
Under 0.062	To 36, incl	1/2
	Over 36 to 60, incl	3/4
	Over 60	1

Sheets Specified to Stretcher Leveled Standard of Flatness.

Specified Thickness, in.	Width, in.	Length, in.	Flatness Tolerance (Max Deviation from a Horizontal Flat Surface), in.
Under 3/16	To 48, incl	To 96, incl	1/8
Under 3/16	To 48, incl	Over 96	1/4
Under 3/16	Over 48	To 96, incl	1/4
Under 3/16	Over 48	Over 96	1/4

TABLE VII.—DIAMETER TOLERANCES FOR HOT-ROLLED AND COLD-ROLLED SHEETS, SHEARED CIRCLES.

Specified Thickness, in.	Tolerance Over Specified Diameter (No Tolerance Under), in.		
	Diameters Under 30 in.	Diameters 30 to 48 in., incl	Diameters Over 48 in.
0.0972 and thicker	1/8	3/16	1/4
0.0971 to 0.0568, incl	3/32	5/32	7/32
0.0567 and thinner	1/16	1/8	3/16

TABLE VIII.—WEIGHT TOLERANCES FOR HOT-ROLLED AND COLD-ROLLED SHEETS.

It is not practicable to produce hot-rolled and cold-rolled sheets to exact theoretical weight. Sheets of any one item of a specified thickness and size in any finish may be overweight to the following extent:

(*1*) Any item of five sheets or less, or any item estimated to weigh 200 lb or less, may actually weigh as much as 10 per cent over the theoretical weight.

(*2*) Any item of more than five sheets and estimated to weigh more than 200 lb, may actually weigh as much as 7½ per cent over the theoretical weight.

The underweight variations for stainless steel sheets are limited by the under thickness tolerances shown in Table III.

For determining estimated weights the following factors are used:

Corrosion and Heat-Resisting Steel Sheets:

Chromium-Nickel . . . . 42.0 lb per sq ft per in. thickness

Chromium . . . . 41.2 lb per sq ft per in. thickness

Tension Testing of Metallic Materials, (ASTM Designation: E 8). Section 9 of

TABLE IX.—THICKNESS TOLERANCES FOR COLD-ROLLED STRIP.

Specified Thickness, in.	Thickness Tolerances, for the Thicknesses and Widths Given, Over and Under, in.							
	Width, in.							
	1/8 incl to 1	1 incl to 3	3 to 6 incl	Over 6 to 9 incl	Over 9 to 12 incl	Over 12 to 16 incl	Over 16 to 20 incl	Over 20 to 24 excl
	Thickness Tolerance, in.							
Under 3/16 to 0.161, incl	0.002	0.003	0.004	0.004	0.004	0.005	0.006	0.006
0.160 to 0.100, incl	0.002	0.002	0.003	0.004	0.004	0.004	0.005	0.005
0.099 to 0.069, incl	0.002	0.002	0.003	0.003	0.003	0.004	0.004	0.004
0.068 to 0.050, incl	0.002	0.002	0.003	0.003	0.003	0.003	0.004	0.004
0.049 to 0.040, incl	0.002	0.002	0.0025	0.003	0.003	0.003	0.004	0.004
0.039 to 0.035, incl	0.002	0.002	0.0025	0.003	0.003	0.003	0.003	0.003
0.034 to 0.029, incl	0.0015	0.0015	0.002	0.0025	0.0025	0.0025	0.003	0.003
0.028 to 0.026, incl	0.001	0.0015	0.0015	0.002	0.002	0.002	0.0025	0.003
0.025 to 0.020, incl	0.001	0.001	0.0015	0.002	0.002	0.002	0.0025	0.0025
0.019 to 0.017, incl	0.001	0.001	0.001	0.0015	0.0015	0.002	0.002	0.002
0.016 to 0.013, incl	0.001	0.001	0.001	0.0015	0.0015	0.0015	0.002	0.002
0.012	0.001	0.001	0.001	0.001	0.0015	0.0015	0.0015	0.0015
0.011	0.001	0.001	0.001	0.001	0.001	0.0015	0.0015	0.0015
0.010	0.001	0.001	0.001	0.001	0.001	0.001	0.0015	0.0015

Note 1.—For thicknesses under 0.010 in. to 0.005 in., incl, in widths up to and including 16 in. a tolerance of ±10 per cent of the thickness applies. For thicknesses under 0.010 to 0.005 in. incl, in widths over 16 in. to 24 in., excl, a tolerance of ±15 per cent of the thickness applies. For thickness tolerances on thicknesses under 0.005 in., in widths up to 24 in., excl, the producer should be consulted.

Note 2.—Thickness measurements are taken ⅜ in. in from edge of the strip, except that on widths less than 1 in. the tolerances are applicable for measurements at all locations.

Note 3.—The tolerances in this table do not include crown tolerances.

TABLE X.—CROWN TOLERANCES FOR COLD-ROLLED STRIP.

Note.—Cold-rolled strip may be thicker at the middle than at the edges by the amounts given in this table.

Specified Thickness, in.	Additional Thickness, at Middle of Strip Over that Shown in Table IX for Edge Measurement, for Widths and Thicknesses Given, in.		
	Width, in.		
	To 5, incl	Over 5 to 12, incl	Over 12 to 24, excl
0.005 to 0.010 incl	0.00075	0.001	0.0015
Over 0.010 to 0.025, incl	0.001	0.0015	0.002
Over 0.025 to 0.065, incl	0.0015	0.002	0.0025
Over 0.065 to 3/16, excl	0.002	0.0025	0.003

Methods E 8 shall govern the selection of test specimens.

(*b*) Transverse bend test specimens from sheet and strip shall be the full thickness of the material and approximately 1 in. in width. The edges of the

TABLE XI.—WIDTH TOLERANCES FOR COLD-ROLLED STRIP OF EDGE NUMBERS 1, 5, AND 3.

Edge Numbers 1 and 5

Specified Edge, No.	Width, in.	Thickness, in.	Width Tolerance for Thickness and Width Given, in.	
			Over	Under
1 and 5	3/32 and under	1/16 and under	0.005	0.005
1 and 5	Over 3/32 to 3/4, incl	3/32 and under	0.005	0.005
1 and 5	Over 3/4 to 5, incl	1/8 and under	0.005	0.005
5	Over 5 to 9, incl	1/8 to 0.008, incl	0.010	0.010
5	Over 9 to 20, incl	0.105 to 0.015	0.010	0.010
5	Over 20 to 23 15/16, incl	0.080 to 0.023	0.015	0.015

Edge Number 3

Specified Thickness, in.	Width Tolerance for Thickness and Width Given, Over and Under, in.					
	Under 1/8 to 3/8, incl	1/2 to 6, incl	Over 6 to 9, incl	Over 9 to 12, incl	Over 12 to 20, incl	Over 20 to 24, excl
Under 3/16 in. to 0.161, incl	...	0.016	0.020	0.020	0.031	0.031
0.160 to 0.100, incl	0.010	0.010	0.016	0.016	0.020	0.020
0.099 to 0.069, incl	0.008	0.008	0.010	0.010	0.016	0.020
0.068 and under	0.005	0.005	0.005	0.010	0.016	0.020

TABLE XII.—LENGTH AND CAMBER TOLERANCES FOR COLD-ROLLED STRIP.

Length Tolerances

Specified Length, ft	Tolerance, Over Specified Length (No Tolerance Under), in.
To 5, incl	3/8
Over 5 to 10, incl	1/2
Over 10 to 20, incl	5/8

Camber Tolerances[a]

Specified Width, in.	Tolerance per Unit Length of any 8 ft, in.
To 1½, incl	1/8
Over 1½ to 24, excl	1/4

[a] Camber is the deviation of a side edge from a straight line, and measurement is taken by placing an eight-foot straight edge *on the concave side* and measuring the greatest distance between the strip edge and the straight edge.

test specimen may be rounded to a radius equal to one half the thickness.

(*c*) The width of the strip for which bend tests can be made is subject to practical limitations on the length of the bend test specimen. For narrow strip

TABLE XIII.—THICKNESS TOLERANCES FOR PLATE.

Specified Thickness, in.	Tolerance Over Specified Thickness, in.[a]	
	Width,[b] in.	
	To 84, incl	Over 84 to 120, incl
3/16 to 3/8, excl	0.046	0.050
3/8 to 3/4, excl	0.054	0.058
3/4 to 1, excl	0.060	0.064
1 to 2, incl[c]	0.070	0.074

[a] For plates up to 2 in., incl, in thickness, the tolerance under specified thickness is 0.01 in.

[b] For circles the above over thickness tolerances apply to the diameter of the circle corresponding to the width ranges shown. For plates of irregular shape the above over thickness tolerances apply to the greatest width corresponding to the width ranges shown.

[c] For thickness tolerances for plates over 2 in. thick, the producer should be consulted.

the following widths can be tested:

Strip Thickness, in.	Minimum Strip Width and Minimum Specimen Length for Transverse Bend Test, in.
0.100 and under	1/2
0.101 to 0.140, excl	1
0.140 and over	1½

Bend test specimens for sheet and strip may be of any suitable length over the minimum length.

(*d*) Bend test specimens taken from plates up to and including ½ in. in thickness shall be the full thickness of the material, of a suitable length, and between 1 and 2 in. in width. The sheared edges may be removed to a depth of at least ⅛ in., and the sides may be smoothed with a file. The corners of the cross-section of the specimen may be broken with a smooth file, but no appreciable rounding of the corners may be permitted.

(*e*) In the case of plates over ½ in. in thickness, machined-bend test specimens, 1 by ½ in. in cross-section and at least 6 in. in length, may be used. The edges may be rounded to a 1/16 in. radius. When permitted by agreement between the manufacturer and the purchaser, the cross-section may be modified to ½ in. square. The center of the test specimen shall be half way between the center and outer surface of the plate unless otherwise specified.

(*f*) Hardness tests may be made on the grip ends of the tension test specimens before they are subjected to the tension test.

Retreatment

17. If any specimens selected to represent any heat fail to meet any of the test requirements, the material represented by such specimens may be reheat-treated and resubmitted for test.

Variations in Dimensions and Weight

18. (*a*) *Sheet.*—The material referred to as sheet shall conform to the variations in dimensions prescribed in Tables III to VIII, inclusive.

(*b*) *Cold-Rolled Strip.*—The material referred to as cold-rolled strip shall conform to the permissible variations in dimensions prescribed in Tables IX to XII, inclusive.

(*c*) *Plate.*—The material referred to as plate shall conform to the permissible variations in dimensions prescribed in Tables XIII to XVIII, inclusive.

(*d*) *Sheet, Strip, and Plate.*—Material with No. 1 finish may be ground to remove surface defects, provided such grinding does not reduce the thickness or

TABLE XIV.—WIDTH AND LENGTH TOLERANCES FOR PLATE.

Width, in.	Length, in.	Tolerances Over Specified Width and Length for Given Width, Length, and Thickness, in.[a]					
		Under 3/8 in. in Thickness		3/8 to 1/2 in., incl in Thickness		Over 1/2 in. in Thickness[b]	
		Width	Length	Width	Length	Width	Length
48 and under	144 and under	1/8	3/16	3/16	1/4	5/16	3/8
Over 48 to 60, incl		9/16	1/4	1/4	5/16	3/8	7/16
Over 60 to 84, incl		1/4	5/16	5/16	3/8	7/16	1/2
Over 84 to 108, incl		5/16	3/8	3/8	7/16	1/2	9/16
Over 108		3/8	7/16	7/16	1/2	5/8	11/16
48 and under	Over 144 to 240	9/16	3/8	1/4	1/2	5/16	5/8
Over 48 to 60, incl		1/4	7/16	5/16	5/8	3/8	3/4
Over 60 to 84, incl		3/4	1/2	7/16	11/16	1/2	3/4
Over 84 to 108, incl		7/16	9/16	1/2	3/4	5/8	7/8
Over 108		1/2	5/8	5/8	7/8	11/16	1
48 and under	Over 240 to 360	1/4	1/2	5/16	5/8	3/8	3/4
Over 48 to 60, incl		5/16	5/8	3/8	3/4	1/2	3/4
Over 60 to 84, incl		7/16	11/16	1/2	3/4	5/8	7/8
Over 84 to 108, incl		9/16	3/4	5/8	7/8	3/4	1
Over 108		5/8	7/8	11/16	1	7/8	1
60 and under	Over 360 to 480	7/16	13/16	1/2	11/4	5/8	13/8
Over 60 to 84, incl		1/2	11/4	5/8	13/8	3/4	11/2
Over 84 to 108, incl		9/16	11/4	3/4	13/8	7/8	11/2
Over 108		3/4	13/8	7/8	11/2	1	13/8
60 and under	Over 480 to 600	7/16	11/4	1/2	11/2	5/8	15/8
Over 60 to 84, incl		1/2	13/8	5/8	11/2	3/4	15/8
Over 84 to 108, incl		5/8	13/8	3/4	11/2	7/8	15/8
Over 108		3/4	11/2	7/8	15/8	1	13/4
60 and under	Over 600	1/2	13/4	5/8	17/8	3/4	17/8
Over 60 to 84, incl		5/8	13/4	3/4	17/8	7/8	17/8
Over 84 to 108, incl		5/8	13/4	3/4	17/8	7/8	17/8
Over 108		7/8	13/4	1	2	11/8	21/4

[a] The tolerance under specified width and length is 1/4 in.

[b] Rectangular plates over 1 in. in thickness are not commonly sheared and are machined or otherwise cut to length and width or produced in the size as rolled, uncropped.

TABLE XV.—CAMBER TOLERANCE FOR PLATES.

Camber Tolerance = 1/8 in.

$$\times \frac{\text{number of feet of length}}{5}$$

TABLE XVI.—DIAMETER TOLERANCES FOR CIRCULAR PLATES.

Specified Diameter, in.	Tolerance Over Specified Diameter for Given Diameter and Thickness (No Tolerance Under), in.		
	To 3/8 in., excl, in Thickness	3/8 to 2 in., excl, in Thickness	2 in. and Over in Thickness[a]
To 60, excl	1/4	3/8	1/2
60 to 84, excl	5/16	7/16	9/16
84 to 108, excl	3/8	1/2	5/8
108 to 130, excl	7/16	9/16	11/16

[a] Circular and sketch plates over 5/8 in. in thickness are not commonly sheared and are machined or otherwise cut.

TABLE XVIII.—RECOMMENDED PLATE FLAME CUTTING ALLOWANCES TO CLEAN UP IN MACHINING.

Thickness, in.	Machining Allowance per Edge, in.
3 and under	1/2
Over 3 to 6, incl[a]	3/4

[a] For cutting allowances for plates over 6 in. thick, the producer should be consulted.

width at any point beyond the permissible variations in dimensions.

Workmanship

19. The material shall be free from injurious defects, shall have a workmanlike appearance, and shall correspond to the designated finish as indicated in Sections 9, 10, and 11.

Methods of Testing

20. The properties enumerated in this specification shall be determined in accordance with the following methods of the American Society for Testing Materials:

Test	ASTM Designation[a]
Tension	E 8
Brinell Hardness	E 10
Rockwell Hardness	E 18
Intergranular Corrosion	A 393

[a] These designations refer to the following methods of test:

E 8, Tension Testing of Metallic Materials.
E 10, Brinell Hardness of Metallic Materials.
E 18, Rockwell Hardness and Rockwell Superficial Hardness of Metallic Materials, and
A 393, Conducting the Acidified Copper Sulfate Test for Intergranular Attack in Austenitic Stainless Steel.

Number of Tests

21. (*a*) In the case of sheet or strip produced in coil form, two or more tension tests, (one from each end of the coil), one bend test when required, and one or more hardness tests shall be made on specimens taken from each coil. When material is produced in sheet, strip or plate form, one tension, one bend when required, and one or more hardness tests shall be made on each 100 or less sheets, strips, or plates of the same gage and heat produced under the same processing conditions.

(*b*) One corrosion test, when required as described in Section 15, shall be selected from each heat and thickness subjected to the same heat treatment practice. Such a specimen may be obtained from specimens selected for mechanical testing.

TABLE XVII.—FLATNESS TOLERANCES FOR ANNEALED PLATES.

NOTE 1.—Tolerances in this table apply to plates up to 15 ft in length, or to any 15 ft of longer plates.

NOTE 2.—If the longer dimension is under 36 in., the tolerance is not greater than 1/4 in.

NOTE 3.—The shorter dimension specified is considered the width and the flatness deviation across the width does not exceed the tabular amount for that dimension.

NOTE 4.—The maximum deviation from a horizontal flat surface does not customarily exceed the tabular tolerance for the longer dimension specified.

Specified Thickness, in.	Flatness Tolerance (Deviation From a Horizontal Flat Surface), for Thicknesses and Width Given, in.								
	Width, in.								
	48 and under	Over 48 to 60, excl	60 to 72, excl	72 to 84, excl	84 to 96, excl	96 to 108, excl	108 to 120, excl	120 to 144, excl	144 and over
3/16 to 1/4, excl	3/4	1 1/16	1 1/4	1 3/8	1 5/8	1 5/8	1 7/8	2	
1/4 to 3/8, excl	1 1/16	3/4	1 5/16	1 1/8	1 3/8	1 7/16	1 9/16	1 7/8	
3/8 to 1/2, excl	1/2	9/16	1 1/16	3/4	1 3/8	1 3/8	1 1/2	1 7/16	1 3/4
1/2 to 3/4, excl	1/2	9/16	5/8	5/8	1 3/16	1 1/8	1 1/8	1 1/8	1 3/8
3/4 to 1, excl	1/2	9/16	5/8	5/8	3/4	1 3/16	1 5/16	1	1 1/8
1 to 1 1/2, excl	1/2	9/16	9/16	9/16	1 1/16	1 1/16	1 1/16	3/4	1
1 1/2 to 4, excl	3/16	5/16	3/8	7/16	1/2	9/16	5/8	3/4	7/8
4 to 6, excl	1/4	3/8	1/2	9/16	5/8	3/4	7/8	1	1 1/8

Marking

22. (*a*) The specification number, grade, test identification number, and the name of the manufacturer shall be legibly die stamped on each plate in two places not less than 12 in. from the edges. On material thinner than 1/4 in. in thickness this information shall be legibly stencilled instead of stamped.

(*b*) The manufacturer's test identification number shall be legibly stamped on each test specimen.

Inspection

23. The inspector representing the purchaser shall have free entry at all times while work on the contract of the purchaser is being performed, to all parts of the manufacturer's works which concern the manufacture of the material ordered. The manufacturer shall afford the inspector, without charge, all reasonable facilities to satisfy him that the material is being furnished in accordance with this specification, except when an agreement has previously been made between the manufacturer and the purchaser regarding the cost of such tests. All tests (except check analysis) and inspections shall be made at the place of manufacture prior to shipment, unless otherwise specified, and shall be so conducted as not to interfere unnecessarily with the operation of the works.

Rejection

24. (*a*) Unless otherwise specified, any rejection based on tests made in accordance with this specification shall be reported to the manufacturer within ten days from date of test.

(*b*) Material that shows injurious defects subsequent to its acceptance at the manufacturer's works will be rejected, and the manufacturer shall be notified.

Rehearing

25. Samples tested in accordance with this specification that represent rejected material shall be preserved for three weeks from the date of the test report. In case of dissatisfaction with the results of the tests, the manufacturer may make claim for a rehearing within that time.

SPECIFICATION FOR WELDED AUSTENITIC STEEL BOILER, SUPERHEATER, HEAT EXCHANGER, AND CONDENSER TUBES

SA-249

(IDENTICAL WITH ASTM SPECIFICATION A 249-61T EXCEPT THAT GRADE TP305 HAS BEEN DELETED)

Scope

1. (*a*) This specification covers welded tubes made from the austenitic steels listed in Table I, with various grades intended for such use as boiler, superheater, heat exchanger, or condenser tubes.

(*b*) Grades TP304H, TP316H, TP 321H, TP347H, and TP348H are modifications of grades TP304, TP316, TP 321, TP347, and TP348, and are intended for high-temperature service such as for superheaters and reheaters.

(*c*) This specification covers tubes ½ to 5 in., inclusive, in outside diameter and 0.035 to 0.320 in., inclusive, in minimum wall thickness.

NOTE.—Tubing smaller in outside diameter and having a thinner wall than indicated in this specification is available. These smaller sizes may require different mechanical and manipulating tests which should be a matter of agreement between the manufacturer and the purchaser.

(*d*) The purchaser shall specify in the order the outside diameter, minimum wall thickness, and grade desired. The inside diameter shall not be specified.

General Requirements

2. Material furnished under this specification shall conform to the applicable requirements of the current edition of the Specification for General Requirements for Carbon, Ferritic Alloy, and Austenitic Alloy Steel Tubes (ASTM Designation: A 450), unless otherwise provided herein.

Process

3. The steel shall be made by the electric-furnace process or other processes approved by the purchaser.

Manufacture

4. (*a*) The tubes shall be made from flat rolled steel by an automatic welding process with no addition of filler metal.

(*b*) Subsequent to welding and prior to final heat treatment, the tubes shall be cold worked to assure that optimum corrosion resistance in the weld area and base metal will be developed during heat treatment.

Heat Treatment

5. (*a*) All material shall be furnished in the heat treated condition. The heat treatment procedure, except for "H" grades, shall consist of heating the material to a minimum temperature of 1900 F and quenching in water or rapidly cooling by other means.

(*b*) All H grades shall be furnished in the solution treated condition. If cold working is involved in processing, the minimum solution treating temperature for grades TP321H, TP347H, and TP 348H shall be 2000 F and for grades TP 304H and TP316H, 1800 F. If the H grade is hot rolled, the minimum solution treating temperatures for grades TP 321H, TP347H, and TP348H shall be 1925 F, and for grades TP304H and TP316H, 1800 F.

Surface Condition

6. The tubes, after final heat treatment, shall be chemically descaled or pickled free from scale. When bright annealing is used, pickling or chemical descaling is not necessary.

Chemical Composition

7. The steel shall conform to the requirements as to chemical composition prescribed in Table I.

Ladle Analysis

8. An analysis of each heat shall be made to determine the percentages of the elements specified. The chemical composition thus determined, or a report of check analysis as specified, shall be reported to the purchaser or his representative and shall conform to the requirements specified.

Check Analysis

9. (*a*) An analysis of either one length of flat rolled stock or one tube shall be made on each heat. The chemical composition thus determined shall conform to the requirements specified.

(*b*) If the analysis of one of these test specimens does not conform to the requirements specified, an analysis of each length of flat rolled stock or tube from the same heat may be made, and all lengths of flat rolled stock or tubes thus conforming to the requirements shall be accepted.

Tensile Properties

10. The material shall conform to the tensile properties prescribed in Table II.

Reverse Bend Test

11. A section 4 in. in length shall be split longitudinally 90 deg on each side of the weld. The sample shall then be opened and bent around a mandrel with a diameter four times the wall thickness,

TABLE I—CHEMICAL REQUIREMENTS.

Grade	TP 304	TP 304H	TP 304L	TP 309	TP 310	TP 316	TP 316H	TP 316L	TP 317	TP 321	TP 321H	TP 347	TP 347H	TP 348	TP 348H
Carbon, per cent	0.08 max	0.04 to 0.10	0.035 max[a]	0.15 max	0.15 max	0.08 max	0.04 to 0.10	0.035 max[a]	0.08 max	0.08 max	0.04 to 0.10	0.08 max	0.04 to 0.10	0.08 max	0.04 to 0.10
Manganese, max, per cent	2.00	2.00	2.00	2.00	2.00	2.00	2.00	2.00	2.00	2.00	2.00	2.00	2.00	2.00	2.00
Phosphorus, max, per cent	0.040	0.040	0.040	0.040	0.040	0.040	0.040	0.040	0.040	0.040	0.040	0.040	0.040	0.040	0.040
Sulfur, max, per cent	0.030	0.030	0.030	0.030	0.030	0.030	0.030	0.030	0.030	0.030	0.030	0.030	0.030	0.030	0.030
Silicon, max, per cent	0.75	0.75	0.75	0.75	0.75	0.75	0.75	0.75	0.75	0.75	0.75	0.75	0.75	0.75	0.75
Nickel, per cent	8.00 to 11.0	8.00 to 11.0	8.00 to 13.0	12.0 to 15.0	19.0 to 22.0	11.0 to 14.0	11.0 to 14.0	10.0 to 15.0	11.0 to 14.0	9.0 to 13.0	9.0 to 13.0	9.0 to 13.0	9.0 to 13.0	9.0 to 13.0	9.0 to 13.0
Chromium, per cent	18.0 to 20.0	18.0 to 20.0	18.0 to 20.0	22.0 to 24.0	24.0 to 26.0	16.0 to 18.0	16.0 to 18.0	16.0 to 18.0	18.0 to 20.0	17.0 to 20.0	17.0 to 20.0	17.0 to 20.0	17.0 to 20.0	17.0 to 20.0	17.0 to 20.0
Molybdenum, per cent	....	....	....	....	....	2.00 to 3.00	2.00 to 3.00	2.00 to 3.00	3.00 to 4.00	....	....	....	....	....	....
Titanium, per cent	....	....	....	....	....	....	....	....	....	[b]	[b]	[c]	[c]	[d]	[d]
Columbium plus tantalum, per cent	....	....	....	....	....	....	....	....	....	....	....	[e]	[e]	[f]	[f]
Tantalum, max, per cent	....	....	....	....	....	....	....	....	....	....	....	....	....	....	[g]

[a] For small diameter or thin walls, or both, where many drawing passes are required, a carbon maximum of 0.040 per cent is necessary in grades TP 304L and TP 316L. Small outside diameter and light wall tubes are defined as those less than 0.500 in. in outside diameter and less than 0.049 in. in average wall thickness (0.040 in. in minimum wall thickness).

[b] Grade TP 321 shall have a titanium content of not less than five times the carbon content and not more than 0.60 per cent.

[c] Grades TP 347 and TP 348 shall have a columbium plus tantalum content of not less than ten times the carbon content and not more than 1.0 per cent.

[d] Grade TP 321H shall have a titanium content of not less than four times the carbon content and not more than 1.0 per cent.

[e] Grades TP 347H and TP 348H shall have a columbium plus tantalum content of not less than eight times the carbon content and not more than 1.0 per cent.

[f] Grades TP 347H and TP 348H shall have a columbium plus tantalum content of not less than eight times the carbon content and not more than 1.0 per cent.

[g] Grades TP 348H shall have a tantalum content of not more than 0.10 per cent.

TABLE II.—TENSILE REQUIREMENTS.[a]

Tensile strength, min, psi	75 000[b]
Yield point, min, psi	30 000[b]
Elongation in 2 in., min, per cent	35
For longitudinal strip tests the width of the gage section shall be 1 in. and a deduction for each 1/32-in. decrease in wall thickness below 5/16 in. from the basic minimum elongation of the following percentage	1.75[c]

[a] Not applicable to tubes less than ⅛ in. in outside diameter or having wall thickness below 0.015 in., or both. The tensile properties of such small diameter or thin wall tubes shall be a matter of agreement between the manufacturer and the purchaser.

[b] For grades TP304L and TP316L the minimum tensile strength shall be 70,000 psi and the minimum yield point shall be 25,000 psi.

[c] The following table gives the computed minimum values:

Wall Thickness, in.	Elongation in 2 in., min, per cent
5/16 (0.312)	35.00
9/32 (0.281)	33.25
¼ (0.250)	31.50
7/32 (0.219)	29.75
3/16 (0.188)	28.00
5/32 (0.156)	26.25
⅛ (0.125)	24.50
3/32 (0.094)	22.75
1/16 (0.062)	21.00

NOTE.—The above table gives the computed minimum elongation values for each 1/32-in. decrease in wall thickness. Where the wall thickness lies between two values shown above, the minimum elongation value shall be determined by the following equation:

$$E = 56\,t + 17.50$$

where:

E = elongation in 2 in. in per cent, and

t = actual thickness of specimen, in inches.

TABLE III.—NUMBER OF TUBES IN A LOT HEAT TREATED BY THE CONTINUOUS PROCESS.

Size of Tube	Size of Lot
2 in. and over in outside diameter and 0.200 in. and over in wall thickness	not more than 50 tubes
Less than 2 in. but over 1 in. in outside diameter or over 1 in. in outside diameter and under 0.200 in. in wall thickness	not more than 75 tubes
1 in. or less in outside diameter	not more than 125 tubes

with the mandrel parallel to the weld and on the outside of the tube. The weld shall be at the point of maximum bend. There shall be no evidence of cracks or lack of penetration in the weld or of overlaps resulting from flash removal of the weld.

Hardness Requirements

12. The tubes shall have a Rockwell hardness number not exceeding B90 or its equivalent.

Mechanical Tests Required

13. (*a*) *Tension Test.*—One tension test shall be made on a specimen from one tube from each group of 100 finished tubes or fraction thereof.

(*b*) *Flattening Test.*—One flattening test shall be made on specimens from each end of one finished tube, not the one used for the flange test, from each lot[4] heat-treated in a batch-type furnace. For the purpose of calculating the number of tests on tubes heat treated by the continuous process, the number of tubes in a heat-treated lot[4] shall be determined from the size of the tubes as prescribed in Table III.

(*c*) *Flange Test.*—One flange test shall be made on specimens from each end of one finished tube, not the one used for the flattening test, from each lot[4] heat treated in a batch-type furnace. For the purpose of calculating the number of tests on tubes heat treated by the continuous process, the number of tubes in a heat-treated lot[4] shall be determined from the size of the tubes as prescribed in Table III.

(*d*) *Reverse Bend Test.*—One reverse bend test shall be made on a specimen from each 1500 ft of finished tubing.

(*e*) *Hardness Test.*—When properly controlled continuous furnaces are used for heat treatment, 1 per cent of all tubes but in no case less than 5 tubes shall be selected for the hardness test. When heat treatment is performed in a batch-type furnace, 5 per cent of all tubes shall be selected for the hardness test.

(*f*) *Hydrostatic or Nondestructive Electric Test.*—Each tube shall be subjected to the hydrostatic test. When accepted by the purchaser, as an alternate, the nondestructive electric test may be applied.

Forming Operations

14. Tubes when inserted in the boiler shall stand expanding and bending without showing cracks or flaws. All tubes, when properly manipulated, shall be able to stand expanding and bending without showing cracks and flaws, and also shall stand all forging, welding, and bending operations necessary for application without developing defects.

Finish

15. Finished tubes shall have smooth ends free from burrs and shall not deviate from straightness by more than 0.030 in. in 3 ft of length. They shall be free from injurious defects and shall have a workmanlike finish. Minor defects may be removed by grinding provided the wall thickness is not decreased to less than that permitted in Table V of Specification A 450.

Marking

16. In addition to the marking prescribed in Specification A 450, the marking for grades TP304H, TP316H, TP 321H, TP347H, and TP348H shall also include the heat number and the heat-treatment lot identification.

[4] The term "lot" applies to all tubes of the same nomial size and wall thickness (or schedule) which are produced from the same heat of steel and subjected to the same finishing treatment in a continuous furnace; when final heat treatment is in a batch type furnace, the lot shall include only those tubes which are heat treated in the same furnace charge. When no heat treatment is performed following final forming operations, the lot shall include hot rolled material only or cold drawn material only.

SPECIFICATION FOR ELECTRIC-RESISTANCE-WELDED CARBON-MOLYBDENUM ALLOY-STEEL BOILER AND SUPERHEATER TUBES

SA-250

(IDENTICAL WITH ASTM SPECIFICATION A 250-61T)

Scope

1. (*a*) This specification covers several grades, designated T 1, T 1a, and T 1b, of electric-resistance-welded, carbon-molybdenum alloy-steel boiler and superheater tubes.

(*b*) This specification covers tubes ½ to 5 in., inclusive, in outside diameter and 0.035 to 0.320 in., inclusive, in minimum wall thickness.

(*c*) The purchaser shall specify in the order the outside diameter, minimum wall thickness, and grade desired. The inside diameter shall not be specified.

General Requirements

2. Material furnished under this specification shall conform to the applicable requirements of the current edition of the Specification for General Requirements for Carbon, Ferritic Alloy, and Austenitic Alloy Steel Tubes (ASTM Designation: A 450), unless otherwise provided herein.

Process

3. The steel shall be a killed steel made by either or both of the following processes: open hearth or electric furnace.

Manufacture

4. Tubes shall be made from strip steel by electric-resistance welding.

Heat Treatment

5. Tubes shall be normalized at a temperature above the upper critical temperature.

Chemical Composition

6. The steel shall conform to the requirements as to chemical composition prescribed in Table I.

Ladle Analysis

7. An analysis of each heat shall be made to determine the percentages of the elements specified. The chemical composition thus determined or a report of check analysis as specified shall be reported to the purchaser or his representative and shall conform to the requirements specified.

Check Analysis

8. (*a*) Two check analyses shall be made by the manufacturer from each heat. At the option of the manufacturer, the tests may be made on the tubes or the flat rolled stock.

(*b*) If the analysis of one of these test specimens does not conform to the requirements specified, an analysis of two additional lengths of flat rolled stock or two additional tubes from the same heat may be made. Each of the lengths of flat rolled stock or tubes tested shall conform to the requirements specified.

TABLE I.—CHEMICAL REQUIREMENTS.

	Grade T 1	Grade T 1a	Grade T 1b
Carbon, per cent	0.10 to 0.20	0.15 to 0.25	0.14 max
Manganese, per cent	0.30 to 0.80	0.30 to 0.80	0.30 to 0.80
Phosphorus, max, per cent	0.045	0.045	0.045
Sulfur, max, per cent	0.045	0.045	0.045
Silicon, per cent	0.10 to 0.50	0.10 to 0.50	0.10 to 0.50
Molybdenum, per cent	0.44 to 0.65	0.44 to 0.65	0.44 to 0.65

TABLE II.—TENSILE REQUIREMENTS.

Grade	T 1	T 1a	T 1b
Tensile strength, min, psi.	55 000	60 000	53 000
Yield point, min, psi.	30 000	32 000	28 000
Elongation in 2 in., min, per cent	30	30	30
For longitudinal strip tests the width of the gage section shall be 1 in. and a deduction for each ½₃₂-in. decrease in wall thickness below 5/16 in. from the basic minimum elongation of the following percentage	1.50[a]	1.50[a]	1.50[a]

[a] The following table gives the computed minimum values:

Wall Thickness, in.	Elongation in 2 in., min, per cent
	Grades T 1, T 1a, T 1b
5/16 (0.312)	30.00
9/32 (0.281)	28.50
1/4 (0.250)	27.00
7/32 (0.219)	25.50
3/16 (0.188)	24.00
5/32 (0.156)	22.50
1/8 (0.125)	21.00
3/32 (0.094)	19.50
1/16 (0.062)	18.00

NOTE.—The above table gives the computed minimum elongation values for each ½₃₂-in. decrease in wall thickness. Where the wall thickness lies between two values shown above, the minimum elongation value shall be determined by the following equation:

$$E = 48t + 15.00$$

where:
E = elongation in 2 in. in per cent, and
t = actual thickness of specimen, in inches.

TABLE III.—NUMBER OF TUBES IN A LOT HEAT TREATED BY THE CONTINUOUS PROCESS.

Size of Tube	Size of Lot
2 in. and over in outside diameter and 0.200 in. and over in wall thickness	not more than 50 tubes
Less than 2 in. but over 1 in. in outside diameter or over 1 in. in outside diameter and under 0.200 in. in wall thickness	not more than 75 tubes
1 in. or less in outside diameter	not more than 125 tubes

Tensile Properties

9. The material shall conform to the requirements as to tensile properties prescribed in Table II.

Hardness Requirements

10. The tubes shall have a hardness number not exceeding the following:

	Brinell Hardness Number (Tubes 0.200 in. and over in wall thickness)	Rockwell Hardness Number (Tubes less than 0.200 in. in wall thickness)
Grade T 1	137	B77
Grade T 1a	143	B79
Grade T 1b	137	B77

Mechanical Tests Required

11. (*a*) *Tension Test.*—One tension test shall be made on specimens from two tubes from each group of 100 finished tubes or fraction thereof.

(*b*) *Flattening Test.*—One flattening test shall be made on specimens from each end of one finished tube, not the one used for the flange test, from each lot[4] heat treated in a batch-type furnace. For the purpose of calculating the number of tests on tubes heat treated by the continuous process, the number of tubes in a heat-treated lot[4] shall be determined from the size of the tubes as prescribed in Table III.

(*c*) *Flange Test.*—One flange test shall be made on specimens from each end of one finished tube, not the one used for the flattening test, from each lot[4] heat treated in a batch-type furnace. For the purpose of calculating the number of tests on tubes heat treated by the continuous process, the number of tubes in a heat-treated lot[4] shall be determined from the size of the tubes as prescribed in Table III.

(*d*) *Reverse Flattening Test.*—One reverse flattening test shall be made on a specimen from each 1500 ft of finished tubing.

(*e*) *Hardness Test.*—When properly controlled continuous furnaces are used for heat treatment, 1 per cent of all tubes but in no case less than 5 tubes shall be selected for the hardness test. When heat treatment is performed in a batch-type furnace, 5 per cent of all tubes shall be selected for the hardness test.

(*f*) *Hydrostatic or Nondestructive Electric Test.*—Each tube shall be subjected to the hydrostatic test. When accepted by the purchaser, as an alternate, the nondestructive electric test may be applied.

Forming Operations

12. Tubes when inserted in the boiler shall stand expanding and bending without showing cracks or flaws. Super-heater tubes when properly manipulated shall stand all forging, welding, and bending operations necessary for application without developing defects.

Finish

13. Finished tubes shall be reasonably straight and have smooth ends free from burrs. They shall be free from injurious defects and shall have a workmanlike finish. Minor defects may be removed by grinding, provided the wall thickness is not decreased to less than that permitted in Table V of Specification A 450.

Marking

14. In addition to the marking prescribed in Specification A 450, the marking shall include the words "Electric Resistance-Welded Steel."

[4] The term "lot" applies to all tubes of the same nominal size and wall thickness (or schedule) which are produced from the same heat of steel and subjected to the same finishing treatment in a continuous furnace; when final heat treatment is in a batch type furnace, the lot shall inoude only those tubes which are heat treated in the same furnace charge. When no heat treatment is performed following final forming operations, the lot shall include hot-rolled material only or cold-drawn material only.

SPECIFICATION FOR IRON AND STEEL GAS-WELDING RODS

SA-251

(IDENTICAL WITH ASTM SPECIFICATION A 251-46T)

Scope

1. (*a*) These specifications cover gas-welding rods for the welding of carbon and low-alloy steels of weldable quality.

NOTE.—In connection with the welding of low-alloy steels the requirements of these specifications pertain to the tensile strength and elongation of the deposited metal and not to high- or low-temperature characteristics, creep properties, or corrosion resistance.

(*b*) The rods are classified on the basis of the ultimate tensile strength of the deposited weld metal in the stress-relieved condition, as shown in Table I.

TABLE I.—TENSILE REQUIREMENTS OF DEPOSITED METAL.
(Using 5/32 or 1/4-in. Welding Rods)

Welding Rod Classification Number	Plate Thickness, in.	Treatment of Welded Specimen[a]	Tension Test Requirements	
			Tensile Strength, min., psi.	Elongation in 2 in., min., per cent
GA65	3/4	SR	65 000	20
		NSR	72 000	17
GA60	3/4	SR	60 000	25
		NSR	62 000	20
GA50	3/4	SR	50 000	28
		NSR	52 000	23
GB65	3/4	SR	65 000	18
		NSR	72 000	15
GB60	3/4	SR	60 000	20
		NSR	62 000	15
GB45	3/4	NSR	45 000[b]	

[a] The abbreviations SR and NSR signify stress-relieved and non-stress-relieved, respectively. Stress-relieving when prescribed in these specifications is for the purpose of developing the fundamental properties of the weld metal unaltered by locked-up stress. Values obtained from stress-relieved welded specimens are about 5 per cent lower in tensile strength and 10 to 20 per cent higher in elongation than those of non-stress-relieved specimens. Stress-relieving shall be within the range of 1150 ± 25 F, for 1 hr. per inch of thickness. Specimens shall be heated in a suitable furnace at the rate of 300 to 350 F. per hour until a temperature of 1150 ± 25 F. has been attained. After this temperature has been reached, it shall be maintained for 1 hr. for each inch or fraction thereof of the maximum thickness of the section. The specimens shall be cooled at the same rate specified for heating and may be removed from the furnace when the temperature of the plates has reached 300 F.

[b] This value shall be obtained with the full-section tension test specimen shown in Fig. 2. All other values in this column shall be obtained with the all-weld-metal tension test specimen shown in Fig. 1.

Manufacture

2. The rods may be made by any methods that will yield a product conforming to the requirements of these specifications.

Standard Sizes and Length

3. Standard length rods are 36 in., and standard diameters are as follows:

1/16 in. 5/32 in. 3/16 in.
7/32 in. 1/4 in. 5/16 in.
3/8 in. 1/2 in.

Chemical Composition

4. The rods shall conform to the following requirement as to chemical composition:

Sulfur, max., per cent	0.045

Tension Tests

5. Tension tests shall be made, using 5/16 or 1/2-in. welding rods, as prescribed in the following Paragraphs (*a*) to (*e*), these tests qualifying all sizes of welding rod made from the same melt of steel.

(*a*) The steel to be used for test plates shall conform to either of the following specifications of the American Society for Testing Materials:

(*1*) Tentative Specifications for Low and Intermediate Tensile Strength and Carbon-Steel Plates of Flange and Firebox Qualities (Plates 2 in. and Under in Thickness) (A.S.T.M. Designation A 285), and

(*2*) Tentative Specifications for Steel for Bridges and Buildings (A.S.T.M. Designation A 7), open hearth or electric-furnace steel.

(*b*) A test plate shall be prepared as shown in Fig. 1 (for welding rods of the GA65, GA60, GA50, GB65, and GB60 classifications) or Fig. 2 (for welding rods of the GB45 classification). The plate shall be insulated from the welding bench by asbestos during welding. After the joint has been tacked, the plate on both sides of the joint shall be heated for approximately 5 min. with a flame of the size and type to be used in welding the joint. The test plate shall then be

Dimensions of Test Plate and Tension Test Specimen, in.

A	B	C	D	E	F	G	H	I	J
0.500 ± 0.01	2	3/4	4 1/4	3/4	3/4	2 1/4	12	3/4	3/4

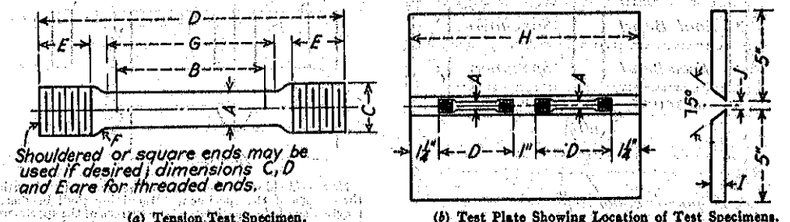

(*a*) Tension Test Specimen. (*b*) Test Plate Showing Location of Test Specimens.

FIG. 1.—Requirements for Preparation of All-Weld-Metal Tension Test Specimens.

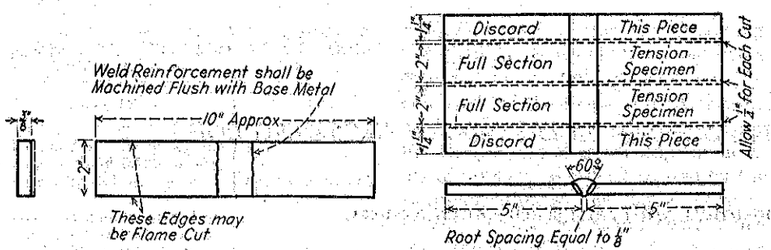

(a) Tension Test Specimen. (b) Test Plate Showing Location of Test Specimens.

FIG. 2.—Requirements for Preparation of Full-Section Tension Test Specimens.

welded using a maximum of five layers and having no layer exceeding $\frac{5}{16}$ in. in thickness. The weld metal shall be deposited with a backhand technique, using the size and type of flame recommended by the manufacturer of the welding rod. After depositing each layer, the plate shall be left on the asbestos to cool in still air for at least 15 min. The joint shall be welded completely but shall not have a reinforcement exceeding 20 per cent of the plate thickness. It is permissible to torch normalize the weld by reheating the weld metal above the critical temperature range. After the last pass, the plate shall be left on the asbestos until cold. The work shall be done at room temperature of not less than 60 F. and in the flat position. Test plates shall preferably be so supported that warping due to welding will not cause the finished test plate to be out of line by more than 5 deg. If test plates become warped more than 5 deg. they shall be straightened cold before being stress-relieved, when required.

(*c*) Two tension test specimens shall be machined from the finished test plate as shown in Fig. 1 (for welding rods of the GA65, GA60, GA50, GB65, and GB60 classifications) or Fig. 2 (for welding rods of the GB45 classification), and shall conform to the requirements as to tensile properties prescribed in Table I.

(*d*) If either specimen fails, another test plate shall be welded and both specimens shall conform to the tension test requirements prescribed in Table I.

(*e*) Welding rods in each classification shall be capable of producing satisfactory welds which will conform to the tension test requirements prescribed in Table I.

Face- and Root-Bend Tests of Welded Joints

6. For all classifications of welding rods, except GB45, face- and root-bend tests shall be made, using $\frac{3}{16}$ or $\frac{1}{4}$-in. welding rods, as prescribed in the following Paragraphs (*a*) to (*f*), these tests qualifying all sizes of welding rod made from the same melt of steel.

(*a*) The steel to be used for test plates shall conform to either of the specifications listed in Section 5 (*a*).

(*b*) A test plate shall be prepared as shown in Fig. 3. The work shall be done at room temperature of not less than 60 F. and in the flat position. No stress-relieving shall be performed on the test plate or on the specimens removed therefrom.

(*c*) From each test plate there shall be removed two face-bend specimens and two root-bend specimens in the order shown in Fig. 3. The specimens shall be prepared for testing as shown in Fig. 4.

(*d*) Each specimen shall be bent in a jig having the working contour shown in Fig. 5, and otherwise substantially in accordance with that figure. Any convenient means may be used for moving the plunger member with relation to the die member. The specimen shall be placed on the die member of the jig with the weld at mid-span. Face-bend specimens shall be placed with the face of the weld directed toward the gap, and root-bend specimens shall be placed with the root of the weld directed toward the gap. The two members of the jig shall be forced together until the specimen conforms to a U-shape, and until a wire $\frac{1}{32}$ in. in diameter cannot be placed between the specimen and any point on the curvature of the plunger member of the jig. The specimen shall then be removed from the jig.

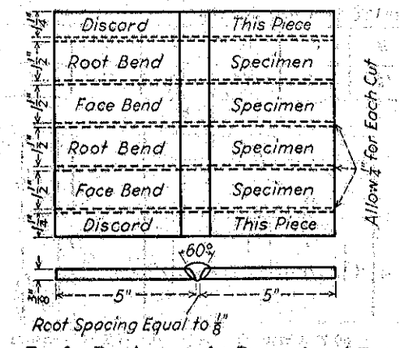

FIG. 3.—Requirements for Preparation of Test Plate for Face- and Root-Bend Tests.

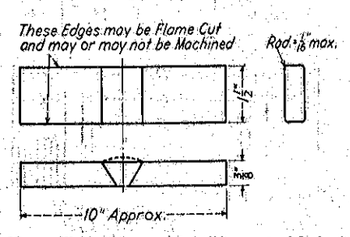

NOTE.—Weld reinforcement shall be removed flush with the surface of the specimen. Machining shall be done lengthwise of the specimen. The surface of the specimen to be tested shall be finely machined or ground.

FIG. 4.—Face- and Root-Bend Specimens.

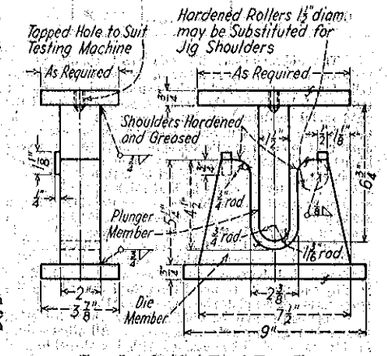

FIG. 5.—Guided-Bend Test Jig.

(*e*) The convex surface of each specimen shall be examined for the appearance of cracks or other open defects. The specimen shall be considered as having failed if a crack or other open defect, exceeding $\frac{1}{8}$ in. measured in any direction, is present after the bending. Cracks occurring on the corners of the specimen during testing shall not be considered.

(*f*) Welding rods of all classifications, except GB45, shall be capable of producing satisfactory welds which will conform to the face- and root-bend test requirements prescribed in Paragraphs (*a*) to (*e*) above, for all positions of welding.

Permissible Variations in Dimensions

7. The diameter of the rod shall not vary more than plus or minus 0.005 in. from the standard size specified. Cut lengths shall not vary from that specified by more than plus 0 or minus $\frac{1}{4}$ in.

Workmanship and Finish

8. (*a*) Rods shall be of uniform quality and free from injurious segregation, oxides, pipe, seams, or other irregularities.

(*b*) Rods shall be cold-drawn to a smooth finish, free from slivers, depressions, scratches, scale, lime, or foreign matter other than oil, except that rods may have a copper coating.

(*c*) The rods shall be carefully oiled with the minimum amount necessary to prevent rusting, except when copper-coated or otherwise treated to prevent rusting.

Packing

9. The rods shall be suitably packed, wrapped, boxed, or crated to protect against injury during shipment or under normal dry storage conditions, as follows:

(*a*) Bundles of 50 or 100 lb. net weight,

(*b*) Boxes or kegs of 50, 100, or 300 lb. net weight.

Marking

10. (*a*) Welding rods $\frac{1}{8}$ in. and over in diameter shall be marked or stamped with positive identification marks at intervals of not more than 18 in. Such marks shall be clearly distinguishable and shall identify the trade designation of the manufacturer or the classification number of the welding rod.

(*b*) All bundles, boxes, or kegs shall be legibly marked with the following information:

(*1*) Classification,

(*2*) Manufacturer's name and trade designation, and

(*3*) Standard size and length.

Guarantee

11. The manufacturer shall make tests at frequent intervals in accordance with the methods prescribed in these specifications, and shall guarantee that the rods in all sizes and classes conform to these specifications, and the marking of the classification number on the container shall be indication of this fact. The manufacturer's responsibility shall be limited to replacement of any rods which do not conform to the requirements of these specifications.

SPECIFICATION FOR CORROSION-RESISTING CHROMIUM STEEL CLAD PLATE, SHEET, AND STRIP

SA-263

(IDENTICAL WITH ASTM SPECIFICATION A 263-61T)

Scope

1. (*a*) These specifications cover plate, sheet, and strip of a carbon-steel or low-alloy-steel base to which is integrally and continuously bonded on one or both sides a layer of corrosion-resisting chromium steel.

(*b*) This material is considered as single-clad or double-clad, corrosion-resisting chromium-steel plate, sheet, or strip depending on whether one or both sides are covered.

(*c*) The terms plate, sheet, and strip as used in these specifications apply to the following:

Plate.—Material $\frac{3}{16}$ in. and over in thickness,
Sheet.—Material under $\frac{3}{16}$ in. in thickness and 24 in. and over in width, and
Strip.—Cold-rolled material under 24 in. in width.

Process

2. (*a*) The base steel shall be made by one or both of the following processes: open-hearth or electric-furnace.

(*b*) The alloy cladding metal may be bonded to the base metal by any method that will produce a clad steel which will conform to the requirements of these specifications.

Heat Treatment

3. Unless otherwise specified or agreed upon between the purchaser and the manufacturer, all plates shall be furnished in the normalized or tempered condition or both.

Thickness of Cladding Metal

4. The minimum thickness and tolerances on the thickness of the alloy cladding metal shall be agreed upon by the purchaser and the manufacturer.

Chemical Composition

5. (*a*) The composite plate, sheet, or strip may conform to any desired combination of alloy cladding metal and base metal as described in Paragraphs (*b*) and (*c*) and as agreed upon by the purchaser and the manufacturer.

(*b*) *Alloy Cladding Metal.*—The alloy cladding metal specified shall conform to the requirements as to chemical composition prescribed for the respective chromium steel in the Specification for Corrosion-Resisting Chromium and Chromium-Nickel Steel Plate, Sheet, and Strip for Fusion-Welded Unfired Pressure Vessels (ASTM Designation: A 240).

(*c*) *Base Metal.*—The base metal may be carbon steel or low-alloy steel conforming to the ASTM specifications for steel of flange quality or better. For low-alloy steels for which ASTM specifications are not available, the chemical composition shall be as agreed upon by the purchaser and the manufacturer. The base metal shall conform to the requirements of the specifications to which it is ordered. The analysis of the base metal shall be certified to the purchaser by the manufacturer.

Check Analysis

6. (*a*) Check analyses may be required on the finished product only when the composite plate thickness is sufficient to permit obtaining drillings or millings without danger of contamination from the adjacent layer.

(*b*) If check analysis is specified by the purchaser, it shall be made from drillings or millings taken from a broken test specimen. The chemical analysis thus determined shall conform to the requirements prescribed in accordance with Section 5.

Physical Properties

7. (*a*) *Plate:*

(*1*) The physical properties as determined by a tension test on the composite plate shall be equal to or greater than the minimum requirements prescribed in the specifications for the base steel plate used.

(*2*) Two bend tests of the composite plate shall be made, one with the alloy cladding in tension and the other with the alloy cladding in compression, to determine the ductility of the materials. On double-clad plates, the bend tests shall be made so that one specimen represents the alloy cladding in tension on one side while the other specimen represents the alloy cladding in tension on the opposite side. The bend test having the alloy cladding in tension shall be made according to and shall conform to the requirements prescribed in the specifications for the cladding metal. The bend test having the base metal in tension shall be made according to and shall conform to the requirements prescribed in the specifications for the base metal.

(*3*) When required by the purchaser, the minimum shear strength of the alloy cladding and base metals shall be 20,000 psi. The shear test, when specified, shall be made in the manner indicated in Fig. 1.

(*4*) As an alternative to the shear strength test provided in Item (*3*) and when required by the purchaser, three bend tests shall be made with the alloy cladding in compression to determine the quality of the bond. These bend tests shall be made in accordance with the

specifications for the cladding metal. At least two of the three tests shall show not more than 50 per cent separation on both edges of the bent portion. Greater separation shall be cause for rejection.

(*b*) *Sheet and Strip:*

(*1*) The bend test specimens of sheet and strip shall stand being bent cold, without cracking on the outside of the bent portion, through the following angle:

Alloy Cladding Metal	Cold Bend, deg
Grade O Type 405	180
Grade A Type 410	180
Grade B	180
Grade D Type 430 modified	180

The bend test specimens shall be bent around a pin the diameter of which is equal to the thickness of the material. The axis of the bend shall be transverse to the direction of rolling.

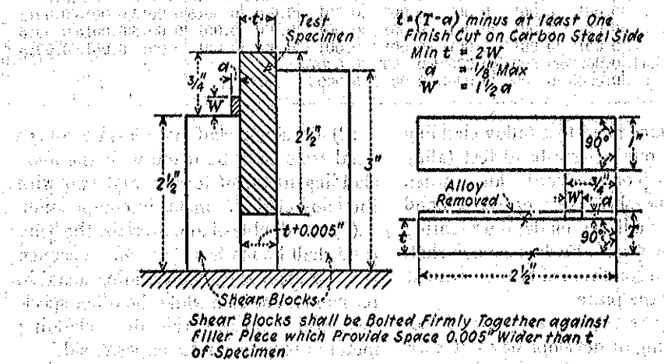

FIG. 1.—Test Specimen and Method of Making Shear Test of Clad Plate.

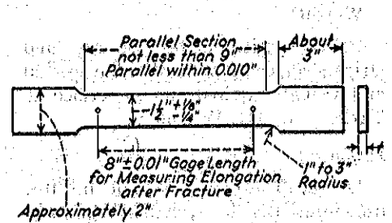

NOTE 1.—When necessary, it is permissible to use a narrower specimen, but in such a case the reduced portion shall be not less than 1 in. in width.

NOTE 2.—Punch marks for measuring elongation after fracture shall be made on the flat or on the edge of the specimen and within the parallel section; either a set of nine punch marks 1 in. apart, or one or more sets of 8-in. punch marks may be used.

NOTE 3.—The dimension "t" is the thickness of the test specimen as provided for in the applicable material specifications.

FIG. 2.—Standard Rectangular Tension Test Specimen with 8-in. Gage Length.

(*2*) The bond between the alloy cladding and the base metal shall be ascertained by observation of the behavior of the composite sheet or strip when sheared with the alloy side down.

(*c*) *Report.*—The results of these tests shall be reported to the purchaser or his representative.

Test Specimens

8. (*a*) *Plate:*

(*1*) The tension test specimens from plate shall conform to the requirements prescribed in the specifications for the base metal.

(*2*) Bend test specimens shall be taken from the middle of the top of the plate as rolled, at right angles to its longitudinal axis.

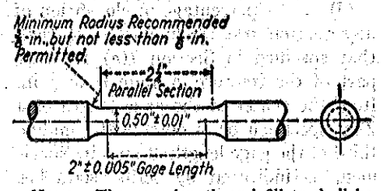

NOTE.—The gage length and fillets shall be as shown, but the ends may be of any shape to fit the holders of the testing machine in such a way that the load shall be axial. The reduced section shall have a gradual taper from the ends toward the center, with the ends 0.003 to 0.005 in. larger in diameter than the center.

FIG. 3.—Standard Round Tension Test Specimen with 2-in. Gage Length.

(*3*) When required by the purchaser, the shear test specimen shall be taken from a top or bottom corner of the plate as rolled, parallel to its longitudinal axis.

(*4*) All tests shall be made on specimens in the same condition of heat treatment to which the composite plate is furnished.

(*5*) For plates 2 in. and under in thickness, tension and bend test specimens shall be the full thickness of the material and shall be machined to the form and dimensions shown in Fig. 2, or the bend test specimen may be machined with both edges parallel.

(*6*) For plates over 2 in. in thickness, tension and bend test specimens need not be greater in thickness than 2 in. but shall be not less than 2 in.; specimens shall be of the form and dimensions shown in Fig. 2. In reducing the thickness of the specimen, both the alloy cladding and the base steel shall be machined so as to maintain the same ratio of clad metal to base steel as is maintained in the plate, except that the thickness of the clad metal need not be reduced below $\frac{1}{8}$ in. As an alternative method for plates over 2 in. in thickness, the tension test specimens may be machined to the form and dimensions shown in Fig. 3, and the axis of such specimens shall be so located that the ratio of cladding to base metal is the same as existed in the as-rolled thickness. At the option of the manufacturer, the tension tests may be made on the alloy cladding metal and the base steel, tested separately according to the specifications for the respective materials. When test specimens are heat treated separately from the plate they represent, they shall be heat treated in the full composite thickness.

(*7*) The sides of the bend test specimen may have the corners rounded to a radius not over $\frac{1}{16}$ in. for plates, 2 in. and under in thickness, and not over $\frac{1}{8}$ in. for plates over 2 in. in thickness.

(*b*) *Sheet and Strip.*—Bend test specimens from sheet and strip shall be of the full thickness of the material and shall have a width equal to six times the thickness but not less than 1 in. The length shall be equal to the width of the sheet or strip but in no case longer than 12 in. The edges of the test specimen may be rounded to a radius equal to one-half the thickness.

(*c*) Any test specimen used for the determination of the minimum thickness of alloy cladding metal shall have distorted metal, due to burning or shearing,

TABLE I.—PERMISSIBLE VARIATIONS IN DIMENSIONS AND WEIGHT OF STANDARD SHEET No. 1 and No. 2 Finishes.

Specified Thickness, in.	Permissible Variations in Thickness, plus or minus, in.
0.005	0.001
0.006 to 0.007	0.0015
0.008 to 0.0160	0.002
0.0161 to 0.026	0.003
0.027 to 0.040	0.004
0.041 to 0.058	0.005
0.059 to 0.072	0.006
0.073 to 0.083	0.007
0.084 to 0.098	0.008
0.099 to 0.114	0.009
0.115 to 0.130	0.010
0.131 to 0.145	0.012
0.146 to 0.176	0.014

Specified Width, in.[a]	Permissible Variations in Width, in.	
	Plus	Minus
Up to 42	1/16	0
42 and over	1/8	0

Specified Length, in.[a]	Permissible Variations in Length, in.	
	Plus	Minus
Up to 120	1/16	0
120 and over	1/8	0

Weight Permissible variations in weight apply only to polished finishes. The actual weight of any one item of an ordered thickness and size in any finish is limited in overweight by the following tolerances:	Estimated Permissible Variations, Actual Weight Over the Estimated Weight, per cent[b]
Any item of 5 sheets or less, or any item estimated to weigh 200 lb or less	10
Any item of more than 5 sheets, and estimated to weigh more than 200 lb	7.5

There is no under variation in weight for No. 1 and No. 2 finishes, these finishes being limited in under variations only by the permissible variations in thickness. Polished sheets may actually weigh as much as 5 per cent less than the estimated weight.[b]

[a] Sheet 0.131 in. and over in thickness, regardless of size, may have permissible variations of ±1/4 in. in width and in length, respectively.

[b] Estimated weight of the composite plates may be calculated using the following weights of the component materials:

	Weight per Square Foot for Material 1 in. in Thicknesss, lb
Steel	40.8
Chromium steel cladding	41.2

TABLE II.—PERMISSIBLE VARIATIONS IN THICKNESS OF COLD-ROLLED STRIP.

Permissible variations in thickness are based on measurements taken 3/8 in. in from the edge on cold-rolled strip 1 in. or over in width, and at any place on the strip on material less than 1 in. in width.

Specified Thickness, in.	Permissible Variations in Thickness, plus or minus, for Widths Given, in.									
	1/2 to 1/2, excl.	1/2 to 1, excl.	1 to 1 1/2, excl.	1 1/2 to 3, excl.	3 to 6	Over 6 to 9	Over 9 to 12	Over 12 to 16	Over 16 to 20	Over 20 to 23 15/16 incl
0.249 to 0.161, incl.	0.002	0.002	0.003	0.003	0.004	0.004	0.004	0.005	0.006	0.006
0.160 to 0.100, incl.	0.002	0.002	0.002	0.002	0.003	0.004	0.004	0.004	0.005	0.005
0.099 to 0.069, incl.	0.002	0.002	0.002	0.002	0.003	0.003	0.003	0.004	0.004	0.004
0.068 to 0.050, incl.	0.002	0.002	0.002	0.002	0.003	0.003	0.003	0.003	0.004	0.004
0.049 to 0.040, incl.	0.002	0.002	0.002	0.002	0.0025	0.003	0.003	0.003	0.004	0.004
0.039 to 0.035, incl.	0.002	0.002	0.002	0.002	0.0025	0.003	0.003	0.003	0.003	0.003
0.034 to 0.032, incl.	0.0015	0.0015	0.0015	0.0015	0.002	0.0025	0.0025	0.0025	0.003	0.003
0.031 to 0.029, incl.	0.0015	0.0015	0.0015	0.0015	0.002	0.0025	0.0025	0.0025	0.003	0.003
0.028 to 0.026, incl.	0.001	0.001	0.0015	0.0015	0.0015	0.002	0.002	0.002	0.0025	0.903
0.025 to 0.023, incl.	0.001	0.001	0.001	0.001	0.0015	0.002	0.002	0.002	0.0025	0.0025
0.022 to 0.020, incl.	0.001	0.001	0.001	0.001	0.0015	0.002	0.002	0.002	0.0025	0.0025
0.019 to 0.017, incl.	0.001	0.001	0.001	0.001	0.001	0.0015	0.0015	0.002	0.002	0.002
0.016 to 0.015, incl.	0.001	0.001	0.001	0.001	0.001	0.0015	0.0015	0.0015	0.002	0.002
0.014 to 0.013, incl.	0.001	0.001	0.001	0.001	0.001	0.0015	0.0015	0.0015	0.002	0.002
0.012	0.001	0.001	0.001	0.001	0.001	0.001	0.0015	0.0015	0.0015	0.0015
0.011	0.001	0.001	0.001	0.001	0.001	0.001	0.001	0.0015	0.0015	0.0015
0.010	0.001	0.001	0.001	0.001	0.001	0.001	0.001	0.001	0.0015	0.0015
0.009 to 0.006, incl.	0.00075	0.00075	0.00075	0.00075	0.00075	...	...	...	...	...
Under 0.006	0.0005	0.0005	0.0005	0.0005	0.0005	...	...	...	...	...

completely removed.

Number of Tests

9. (*a*) *Plate:*

(*1*) One or more tension tests, as required by the specifications for the base metal, one face bend test (alloy cladding in tension), one reverse bend test (alloy cladding in compression), and, when specified, one shear test or three bend bend tests shall be made representing each plate as rolled. Each specimen shall be in the final condition of heat treatment required for the plate.

(*2*) If any test specimen shows defective machining or develops flaws, it may be discarded and another specimen substituted.

(*3*) If the percentage of elongation of any tension test specimen is less than that specified in Section 7(*a*) and any part of the fracture is more than 3/4 in. from the center of the gage length of a 2-in. specimen or is outside the middle third of the gage length of an 8-in. specimen, as indicated by scribe scratches marked on the specimen before testing, a retest shall be allowed.

(*b*) *Sheet and Strip:*

(*1*) On single-clad materials four bend tests shall be made of each lot of material, a lot consisting of 100 or fraction thereof, each of sheets or strips, and in no case less than 1000 lb, from the same melt of steel and the same specified thickness. On double-clad materials two bend tests shall be made on each lot of material.

(*2*) On single-clad materials two of the bend tests shall be made with the alloy cladding metal in tension and two with the alloy cladding metal in compression.

(*3*) On double-clad materials, the bend tests shall be made so that one specimen will represent the alloy cladding metal in tension on one side while the other specimen will represent the alloy cladding metal in tension on the opposite side.

Permissible Variations in Thickness and Weight

10. Composite plates, sheets, and strips shall conform to the dimensional and weight requirements prescribed in Tables I, II, III, IV, and V.

Finish

11. (*a*) The material shall be free from injurious defects, shall have a workmanlike appearance, and shall conform to the designated finish.

(*b*) Plate alloy surfaces shall be sandblasted, pickled, or, blast-cleaned and pickled.

(*c*) The finish for the alloy surfaces of sheets and strips shall be as specified in Sections 13 and 14 of the Specifications for Corrosion-Resisting Chromium Steel Plate, Sheet, and Strip (ASTM Designation: A 176).

TABLE III.—PERMISSIBLE VARIATIONS IN DIMENSIONS OF COLD-ROLLED STRIP.

Edge	Edge Description	Specified Width, in.	Specified Thickness, in.	Permissible Variations in Width, plus or minus, in.
No. 1	Round or square edge, rolled	9/32 or under	1/16 or under	0.005
No. 1		Over 9/32 to 3/4, incl	3/32 or under	0.005
No. 1		Over 3/4 to 5, incl	1/8 or under	0.005
No. 5	Square rolled or filed after slitting	9/32 or under	1/16 or under	0.005
No. 5		Over 9/32 to 3/4, incl	3/32 or under	0.005
No. 5		Over 3/4 to 5, incl	1/8 or under	0.005
No. 5		Over 5 to 9, incl	1/8 to 0.008 incl	0.010
No. 5		Over 9 to 20, incl	0.105 to 0.015	0.010
No. 5		Over 20 to 23 15/16, incl	0.080 to 0.023	0.015
No. 6	Square edge, rolled	1/2 or under	3/16 or under	0.010
No. 6		Over 1/2 to 15/16, incl	3/16 to 0.025, incl	1/64
No. 6		Over 15/16 to 2, incl	1/4 to 0.025, incl	1/32
No. 6		Over 2 to 6, incl	1/4 to 0.225, incl	3/64

Specified Thickness, in.	Permissible Variations in Width of No. 3 Edge Strip, in.[a]			
	Up to 2 in.	Over 2 to 6 in.	Over 6 to 12 in.	Over 12 to 23 15/16 in., incl
0.050 or under	0.007	0.010	0.015	0.015
0.051 to 0.083	0.010	0.012	0.015	0.020
0.084 or over	0.012	0.015	0.018	0.020

Specified Length, ft	Permissible Variations in Length, in.
Up to 5, incl	+3/8
Over 5 to 10, incl	+1/2
Over 10 to 20, incl	+5/8
Over 20 to 30, incl	+3/4
Over 30 to 40, incl	+1
Over 40 to 60, incl	+1 1/2
Over 60 to 90, incl	+2
Over 90 to 200, incl	+2 1/2

Specified Width, in.	Permissible Camber[b]
1 1/2 and under	1/2 in. in any 8-ft length
Over 1 1/2 to 23 15/16, incl	1/4 in. in any 8-ft length

[a] These permissible variations are plus minus. If variation is desired all one way, double the figure indicated.

[b] Camber shall be determined by placing an 8-ft straightedge against the concave side of the strip.

Repair of Minor Defects in Alloy Surface

12. (*a*) In plate material, minor defects in the alloy surface, where defects do not penetrate through to the base steel, may be repaired by welding with electrodes of the same analysis. Where defects penetrate to the base steel, repairs may be made only with the approval of the purchaser's inspector.

(*b*) All repairs in alloy type 410 or repairs penetrating into the base steel shall be stress-relieved to eliminate residual stresses.

Marking

13. (*a*) Except as specified in Paragraph (*b*), the name or brand of the manufacturer, the manufacturer's test identification number, the class of the base steel, the type number of the alloy cladding metal and the specified minimum tensile strength shall be legibly stamped on each finished single-clad plate in two places on the base steel side not less than 12 in. from the edges. The manufacturer's identification number shall be legibly stamped on each test specimen.

TABLE IV.—PERMISSIBLE VARIATIONS IN DIMENSIONS OF HOT-ROLLED STRIP.

Specified Thickness	Permissible Variations in Thickness, plus or minus,[a]			
	5 in. and Under in Width	Over 5 to 10 in. incl, in Width	Over 10 to 15 in. incl, in Width	Over 15 to 23 15/16 in. incl, in Width
No. 23 to No. 18, incl.	0.003	0.004	...	...
No. 17 to No. 11, incl.	0.004	0.005	0.006	0.007
No. 10 to 0.187 in., incl.	0.005	0.006	0.007	0.008
0.188 to 0.249 in., incl.	0.006	0.007	0.008	0.009

Specified Width	Permissible Variations in Width, in.	
	Plus	Minus
Up to 1 in. by No. 16 Bwg and heavier	1/32	1/32
Up to 1 in. by No. 17 Bwg and lighter	1/32	1/32
Over 1 to 2 in., incl	1/32	1/32
Over 2 to 5 in., incl	3/64	3/64
Over 5 to 10 in., incl	1/16	1/16
Over 10 to 15 in., incl	3/32	3/32
Over 15 to 20 in., incl	1/8	1/8
Over 20 to 23 15/16 in., incl	5/32	5/32

Specified Length, ft.	Permissible Variations in Length, in.					
	Up to 3 in., in Width		Over 3 to 6 in., in Width		Over 6 in. in Width	
	Plus	Minus	Plus	Minus	Plus	Minus
Up to 5, incl	1/4	0	3/8	0	1/2	0
Over 5 to 10, incl	3/8	0	1/2	0	3/4	0
Over 10 to 20, incl	1/2	0	5/8	0	1	0
Over 20 to 30, incl	3/4	0	3/4	0	1 1/4	0
Over 30 to 40, incl	1	0	1	0	1 1/2	0
Over 40	1 1/2	0	1 1/2	0	1 3/4	0

Camber:

Strip shall be as straight as practicable and not more than 1/4 in. out of line in any 8 ft of length, with camber measurement taken on the concave edge.

[a] Thickness measurement shall be taken 3/8 in. from edge of strip.

In the case of center measurements for thickness the permissible variations shall be that for the edge measurement plus the following:

0.001 in. for widths 1/2 to 1 1/2 in.
0.002 in. for widths 1 1/2 to 2 1/2 in.
0.003 in. for widths 2 1/2 to 5 in.
0.004 in. for widths 5 to 10 in.
0.005 in. for widths 10 to 15 in.
0.006 in. for widths 15 to 23 15/16 in.

(*b*) For double-clad material or for material under 1/4 in. in thickness, the marking specified in Paragraph (*a*) shall be legibly stenciled instead of stamped.

Inspection

14. (*a*) The manufacturer shall afford

the inspector all reasonable facilities, without charge, to satisfy him that the material is being furnished in accordance with these specifications. All tests (except check analysis) and inspection shall be made at the place of manufacture prior to shipment, unless otherwise specified, and shall be so conducted as not to interfere unnecessarily with the operation of the works.

Rejection

15. (*a*) Unless otherwise specified, any rejection based on tests made in accordance with Section 6 shall be reported to the manufacturer within five working days from the receipt of samples by the purchaser.

(*b*) Material which shows injurious defects subsequent to its acceptance at the manufacturer's works will be rejected, and the manufacturer shall be notified.

Rehearing

16. Samples tested in accordance with Section 6 that represent rejected material shall be preserved for three weeks from the date of the test report. In case of dissatisfaction with the results of the tests, the manufacturer may make claim for a rehearing within that time.

TABLE V.—PERMISSIBLE VARIATIONS IN THICKNESS AND OVERWEIGHTS OF PLATES.

Thickness.[a]									
All plates shall be ordered to thickness and not to weight per square foot. No plates shall vary more than 0.01 in under the thickness ordered, and the overweight of each lot[b] in each shipment shall not exceed the amount given in the table below.									
Weight[c]									
	Permissible Excess in Average Weight per Square Foot Plates for Widths Given in Inches, Expressed in Percentage of Nominal Weight								
Specified Thickness, in.	Under 48	48 to 60, excl	60 to 72, excl	72 to 84, excl	84 to 96, excl	96 to 108, excl	108 to 120, excl	120 to 132, excl	132 to 144, excl
3/16 to 1/4, excl	10.5	12	13.5	15	18	....	....	....	....
1/4 to 5/16, excl	9	10.5	12	13.5	15	18	21	24	28.5
5/16 to 3/8, excl	7.5	9	10.5	12	13.5	15	18	21	25.5
3/8 to 7/16, incl	7	7.5	9	10.5	12	13.5	15	18	22.5
7/16 to 1/2, excl	6	7	7.5	9	10.5	12	13.5	15	19.5
1/2 to 5/8, excl	5.5	6	7	7.5	9	10.5	12	13.5	16.5
5/8 to 3/4, excl	4.5	5.5	6	7	7.5	9	10.5	12	13.5
3/4 to 1, excl	4	4.5	5.5	6	7	7.5	9	10.5	12
1, or over	4	4	4.5	5.5	6	7	7.5	9	10.5

[a] Spot grinding is permitted to remove surface imperfections not to exceed 0.01 in. under the specified thickness.

[b] The term "lot" means all of the plates of each group width and each group thickness.

[c] The weight of individual plates shall not exceed the nominal weight by more than one and one-third times the amount prescribed in the above table.

SPECIFICATION FOR CORROSION-RESISTING CHROMIUM-NICKEL STEEL CLAD PLATE, SHEET, AND STRIP

SA-264

(IDENTICAL WITH ASTM SPECIFICATION A 264-61T EXCEPT SECTION 3, HEAT TREATMENT, WHICH REMAINS THE SAME AS IN SPECIFICATION A 264-44T)

Scope

1. (*a*) These specifications cover plate, sheet, and strip of carbon steel or low-alloy steel base to which is integrally and continuously bonded on one or both sides a layer of corrosion-resisting chromium-nickel steel.

(*b*) This material is considered as single-clad or double-clad corrosion-resisting chromium-nickel steel plate, sheet, or strip depending on whether one or both sides are covered.

(*c*) The terms plate, sheet, and strip as used in these specifications apply to the following:

Plate.—Material 3/16 in. and over in thickness,
Sheet.—Material under 3/16 in. in thickness and 24 in. and over in width, and
Strip.—Cold-rolled material under 24 in. in width.

Process

2. (*a*) The base steel shall be made by one or both of the following processes: open-hearth or electric-furnace.

(*b*) The alloy cladding metal may be bonded to the base metal by any method that will produce a clad steel which will conform to the requirements of these specifications.

Heat Treatment

3. Heat treatment shall be a matter of agreement between the purchaser and the manufacturer.

Thickness of Cladding Metal

4. The minimum thickness and tolerances on the thickness of the alloy cladding metal shall be agreed upon by the purchaser and the manufacturer.

Chemical Composition

5. (*a*) The composite plate, sheet, or strip may conform to any desired combination of alloy cladding metal and base metal as described in Paragraphs (*b*) and (*c*) and as agreed upon by the purchaser and the manufacturer.

(*b*) *Alloy Cladding Metal.*—The alloy cladding metal specified shall conform to the requirements as to chemical composition prescribed for the respective chromium steel in the Specification for Corrosion-Resisting Chromium and Chromium-Nickel Steel Plate, Sheet, and Strip for Fusion-Welded Unfired Pressure Vessels (ASTM Designation: A 240).

(*c*) *Base Metal.*—The base metal may be carbon steel or low-alloy steel conforming to the A.S.T.M. specifications for steel of flange quality or better. For low-alloy steels for which A.S.T.M. specifications are not available, the chemical composition shall be as agreed upon by the purchaser and the manufacturer. The base metal shall conform to the requirements of the specification to which it is ordered. The analysis of the base metal shall be certified to the purchaser by the manufacturer.

Check Analysis

6. (*a*) Check analyses may be required on the finished product only when the composite plate thickness is sufficient to permit obtaining drillings or millings without danger of contamination from the adjacent layer.

(*b*) If check analysis is specified by the purchaser, it shall be made from drillings or millings taken from a broken test specimen. The chemical analysis thus determined shall conform to the requirements prescribed in accordance with Section 5.

Physical Properties

7. (*a*) *Plate:*

(*1*) The physical properties as determined by a tension test on the composite plate shall be equal to or greater than the minimum requirements prescribed in the specifications for the base steel plate used.

(*2*) Two bend tests of the composite plate shall be made, one with the alloy cladding in tension and the other with the alloy cladding in compression to determine the ductility of the materials. On double-clad plates, the bend tests shall be made so that one specimen represents the alloy cladding in tension on one side while the other specimen represents the alloy cladding in tension on the opposite side. The bend test having the alloy cladding in tension shall be made according to and shall conform to the requirements prescribed in the specifications for the cladding metal. The bend test having the base metal in tension shall be made according to and shall conform to the requirements prescribed in the specifications for the base metal.

(*3*) When required by the purchaser, the minimum shear strength of the alloy cladding and base metals shall be 20,000 psi. The shear test, when specified, shall be made in the manner indicated in Fig. 1.

(*4*) As an alternative to the shear strength test provided in Item (*3*) and when required by the purchaser, three bend tests shall be made with the alloy cladding in compression to determine the quality of the bond. These bend tests shall be made in accordance with the specifications for the cladding metal. At least two of the three tests shall show not more than 50 per cent separation on both edges of the bent portion. Greater separation shall be cause for rejection.

(*b*) *Sheet and Strip:*

(*1*) The bend test specimens of sheet

and strip shall stand being bent cold through an angle of 180 deg., without cracking on the outside of the bent portion. The bend test specimens shall be bent around a pin the diameter of which is equal to the thickness of the material. The axis of the bend shall be transverse to the direction of rolling.

(2) The bond between the alloy cladding and the base metal shall be ascertained by observation of the behavior of the composite sheet or strip when sheared with the alloy side down.

(c) *Report.*—The results of these tests shall be reported to the purchaser or his representative.

Test Specimens

8. (a) *Plate:*

(1) The tension test specimens from plate shall conform to the requirements prescribed in the specifications for the base metal.

(2) Bend test specimens shall be taken from the middle of the top of the plate as rolled, at right angles to its longitudinal axis.

(3) When required by the purchaser, the shear test specimen shall be taken from a top or bottom corner of the plate as rolled, parallel to its longitudinal axis.

(4) All tests shall be made on specimens in the same condition of heat treatment to which the composite plate is furnished.

(5) For plates 2 in. and under in thickness, tension and bend test specimens shall be the full thickness of the material and shall be machined to the form and dimensions shown in Fig. 2, or the bend test specimen may be machined with both edges parallel.

(6) For plates over 2 in. in thickness, tension and bend test specimens need not be greater in thickness than 2 in. but shall be not less than 2 in.; specimens shall be of the form and dimensions shown in Fig. 2. In reducing the thickness of the specimen, both the alloy cladding and the base steel shall be machined so as to maintain the same ratio of clad metal to base steel as is maintained in the plate, except that the thickness of the clad metal need not be reduced below $\frac{1}{8}$ in. As an alternative method for plates over 2 in. in thickness, the tension test specimens may be machined to the form and dimensions shown in Fig. 3, and the axis of such specimens shall be so located that the ratio of cladding to base metal is the same as existed in the as-rolled thickness. At the option of the manufacturer, the tension tests may be made on the alloy cladding metal and the base steel, tested separately according to the specifications for the respective materials. When test specimens are heat treated separately from the plate they represent, they shall be heat treated in the full composite thickness.

(7) The sides of the bend test specimen may have the corners rounded to a radius not over $\frac{1}{16}$ in. for plates, 2 in. and under in thickness, and not over $\frac{1}{8}$ in. for plates over 2 in. in thickness.

(b) *Sheet and Strip.*—Bend test specimens from sheet and strip shall be of the full thickness of the material and shall have a width equal to six times the thickness but not less than 1 in. The length shall be equal to the width of the sheet or strip but in no case longer than 12 in. The edges of the test specimen may be rounded to a radius equal to one-half the thickness.

(c) Any test specimen used for the determination of the minimum thickness of alloy cladding metal shall have distorted metal, due to burning or shearing, completely removed.

Number of Tests

9. (a) *Plate:*

(1) One or more tension tests, as required by the specifications for the base metal, one face bend test (alloy cladding in tension), one reverse bend test (alloy cladding in compression), and, when specified, one shear test or three bond bend tests shall be made representing each plate as rolled. Each specimen shall be in the final condition of heat treatment required for the plate.

(2) If any test specimen shows defective machining or develops flaws, it may be discarded and another specimen substituted.

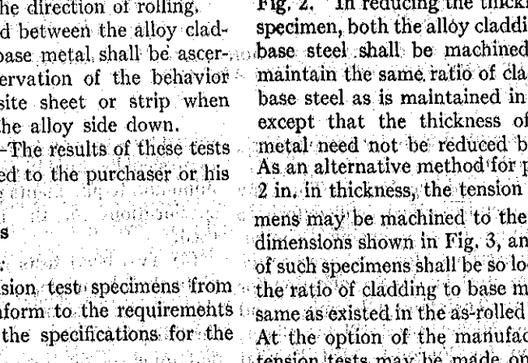

FIG. 1.—Test Specimen and Method of Making Shear Test on Clad Plate.

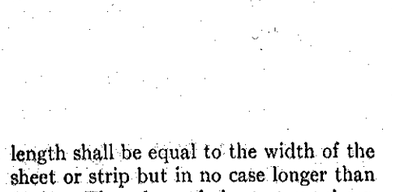

NOTE 1.—When necessary, it is permissible to use a narrower specimen, but in such a case the reduced portion shall be not less than 1 in. in width.

NOTE 2.—Punch marks for measuring elongation after fracture shall be made on the flat or on the edge of the specimen and within the parallel section; either a set of nine punch marks 1 in. apart, or one or more sets of 8-in. punch marks may be used.

NOTE 3.—The dimension "t" is the thickness of the test specimen as provided for in the applicable material specifications.

FIG. 2.—Standard Rectangular Tension Test Specimen with 8-in. Gage Length.

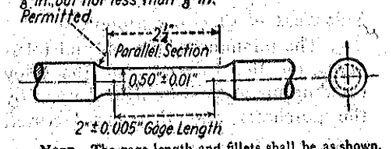

NOTE.—The gage length and fillets shall be as shown, but the ends may be of any shape to fit the holders of the testing machine in such a way that the load shall be axial. The reduced section shall have a gradual taper from the ends toward the center, with the ends 0.003 to 0.005 in. larger in diameter than the center.

FIG. 3.—Standard Round Tension Test Specimen with 2-in. Gage Length.

(3) If the percentage of elongation of any tension test specimen is less than that specified in Section 7 (a) and any part of the fracture is more than $\frac{3}{4}$ in. from the center of the gage length of a 2-in. specimen or is outside the middle third of the gage length of an 8-in. specimen, as indicated by scribe scratches marked on the specimen before testing, a retest shall be allowed.

(b) *Sheet and Strip:*

(1) On single-clad materials four bend tests shall be made of each lot of material, a lot consisting of 100 or fraction thereof, each of sheets or strips, and in no case less than 1000 lb., from the same melt of steel and the same specified thickness. On double-clad materials two bend tests shall be made on each lot of material.

(2) On single-clad materials two of the bend tests shall be made with the alloy-cladding metal in tension and two with the alloy-cladding metal in compression.

(3) On double-clad materials, the bend tests shall be made so that one specimen will represent one alloy cladding metal in tension on one side while the other speci-

TABLE II.—PERMISSIBLE VARIATIONS IN DIMENSIONS AND WEIGHT OF STANDARD SHEET.
No. 1 and No. 2 Finishes.

Specified Thickness, in.	Permissible Variations in Thickness, plus or minus, in.
0.005	0.001
0.006 to 0.007	0.0015
0.008 to 0.0160	0.002
0.0161 to 0.026	0.003
0.027 to 0.040	0.004
0.041 to 0.058	0.005
0.059 to 0.072	0.006
0.073 to 0.083	0.007
0.084 to 0.098	0.008
0.099 to 0.114	0.009
0.115 to 0.130	0.010
0.131 to 0.145	0.012
0.146 to 0.176	0.014

Specified Width,[a] in.	Permissible Variations in Width, in.	
	Plus	Minus
Up to 42	$\frac{1}{8}$	0
42 and over	$\frac{1}{4}$	0

Specified Length,[a] in.	Permissible Variations in Length, in.	
	Plus	Minus
Up to 120	$\frac{1}{8}$	0
120 and over	$\frac{1}{4}$	0

Weight	Permissible Variations, Actual Weight Over the Estimated Weight,[b] per cent
Permissible variations in weight apply only to polished finishes. The actual weight of any one item of an ordered thickness and size in any finish is limited in overweight by the following tolerances:	
Any item of 5 sheets or less, or any item estimated to weight 200 lb. or less	10
Any item of more than 5 sheets, and estimated to weigh more than 200 lb	7.5

There is no under variation in weight for No. 1 and No. 2 finishes, these finishes being limited in under variations only by the permissible variations in thickness. Polished sheets may actually weigh as much as 5 per cent less than the estimated weight.[b]

[a] Sheet 0.131 in. and over in thickness, regardless of size, may have permissible variations of plus or minus $\frac{1}{4}$ in. in width and in length, respectively.

[b] Estimated weight of the composite plates may be calculated using the following weights of the component materials:

	Weight per Square Foot for Material 1 in. in Thickness, lb.
Steel	40.8
Chromium-Nickel steel cladding	42.0

TABLE III.—PERMISSIBLE VARIATIONS IN THICKNESS OF COLD-ROLLED STRIP.

Permissible variations in thickness are based on measurements taken $\frac{3}{8}$ in. in from the edge on cold-rolled strip 1 in. or over in width, and at any place on the strip on material less than 1 in. in width.

Specified Thickness, in.	Permissible Variations in Thickness, plus or minus, for Widths Given, in.									
	$\frac{3}{8}$ to $\frac{1}{2}$, excl.	$\frac{1}{2}$ to 1, excl.	1 to 1½, excl.	1½ to 3, excl.	3 to 6	Over 6 to 9	Over 9 to 12	Over 12 to 16	Over 16 to 20	Over 20 to 23$\frac{15}{16}$, incl.
0.249 to 0.161, incl	0.002	0.002	0.003	0.003	0.004	0.004	0.004	0.005	0.006	0.006
0.160 to 0.100, incl	0.002	0.002	0.002	0.002	0.003	0.004	0.004	0.004	0.005	0.005
0.099 to 0.069, incl	0.002	0.002	0.002	0.002	0.003	0.003	0.003	0.004	0.004	0.004
0.068 to 0.050, incl	0.002	0.002	0.002	0.002	0.003	0.003	0.003	0.003	0.004	0.004
0.049 to 0.040, incl	0.002	0.002	0.002	0.002	0.0025	0.003	0.003	0.003	0.004	0.004
0.039 to 0.035, incl	0.002	0.002	0.002	0.002	0.0025	0.003	0.003	0.003	0.003	0.003
0.034 to 0.032, incl	0.0015	0.0015	0.0015	0.0015	0.002	0.0025	0.0025	0.0025	0.003	0.003
0.031 to 0.029, incl	0.0015	0.0015	0.0015	0.0015	0.002	0.0025	0.0025	0.0025	0.003	0.003
0.028 to 0.026, incl	0.001	0.001	0.0015	0.0015	0.0015	0.002	0.002	0.002	0.0025	0.003
0.025 to 0.023, incl	0.001	0.001	0.001	0.001	0.0015	0.002	0.002	0.002	0.0025	0.0025
0.022 to 0.020, incl	0.001	0.001	0.001	0.001	0.0015	0.002	0.002	0.002	0.0025	0.0025
0.019 to 0.017, incl	0.001	0.001	0.001	0.001	0.001	0.0015	0.0015	0.002	0.002	0.002
0.016 to 0.015, incl	0.001	0.001	0.001	0.001	0.001	0.0015	0.0015	0.0015	0.002	0.002
0.014 to 0.013, incl	0.001	0.001	0.001	0.001	0.001	0.0015	0.0015	0.0015	0.002	0.002
0.012	0.001	0.001	0.001	0.001	0.001	0.001	0.0015	0.0015	0.0015	0.0015
0.011	0.001	0.001	0.001	0.001	0.001	0.001	0.001	0.0015	0.0015	0.0015
0.010	0.001	0.001	0.001	0.001	0.001	0.0001	0.001	0.001	0.0015	0.0015
0.009 to 0.006, incl	0.00075	0.00075	0.00075	0.00075	0.00075	.....	.....	.....	.....	.....
Under 0.006	0.0005	0.0005	0.0005	0.0005	0.0005	.....	.....	.....	.....	.....

TABLE IV.—PERMISSIBLE VARIATIONS IN DIMENSIONS OF COLD-ROLLED STRIP.

Edge	Edge Description	Specified Width, in.	Specified Thickness, in.	Permissible Variations in Width, plus or minus, in.
No. 1	Round or square edge, rolled	$\frac{3}{16}$ or under	$\frac{1}{16}$ or under	0.005
No. 1		Over $\frac{3}{16}$ to $\frac{3}{4}$, incl.	$\frac{1}{16}$ or under	0.005
No. 1		Over $\frac{3}{4}$ to 8, incl.	$\frac{1}{8}$ or under	0.005
No. 5	Square rolled or filed after slitting	$\frac{3}{16}$ or under	$\frac{1}{16}$ or under	0.005
No. 5		Over $\frac{3}{16}$ to $\frac{3}{4}$, incl.	$\frac{1}{16}$ or under	0.005
No. 5		Over $\frac{3}{4}$ to 5, incl.	$\frac{1}{16}$ or under	0.005
No. 5		Over 5 to 9, incl.	$\frac{1}{16}$ to 0.008, incl.	0.010
No. 5		Over 9 to 20, incl.	0.105 to 0.015	0.010
No. 5		Over 20 to 23$\frac{15}{16}$, incl.	0.080 to 0.023	0.015
No. 6	Square edge, rolled	$\frac{1}{16}$ or under	$\frac{1}{16}$ or under	0.010
No. 6		Over $\frac{1}{16}$ to $\frac{15}{16}$, incl.	$\frac{1}{16}$ to 0.025, incl.	$\frac{1}{64}$
No. 6		Over $\frac{15}{16}$ to 2, incl.	$\frac{1}{16}$ to 0.025, incl.	$\frac{1}{32}$
No. 6		Over 2 to 6, incl.	$\frac{1}{16}$ to 0.025, incl.	$\frac{1}{64}$

Specified Thickness, in.	Permissible Variations in Width of No. 3 Edge Strip, in.[a]			
	Up to 2 in. in Width	Over 2 to 6 in. in Width	Over 6 to 12 in. in Width	Over 12 to 23$\frac{15}{16}$ in., incl., in Width
0.050 or under	0.007	0.010	0.015	0.015
0.051 to 0.083	0.010	0.012	0.015	0.020
0.084 or over	0.012	0.015	0.018	0.020

Specified Length, ft.	Permissible Variations in Length, in.
Up to 5, incl	+$\frac{1}{8}$
Over 5 to 10, incl	+$\frac{1}{4}$
Over 10 to 20, incl	+$\frac{3}{8}$
Over 20 to 30, incl	+$\frac{3}{4}$
Over 30 to 40, incl	+1
Over 40 to 60, incl	+1$\frac{1}{2}$
Over 60 to 90, incl	+2
Over 90 to 200, incl	+2$\frac{1}{2}$
Camber:[b]	
Up to and including 1½ in. in width	$\frac{1}{2}$ in. in any 8-ft. length
Over 1½ to 24 in. excl., in width	$\frac{1}{4}$ in. in any 8-ft. length

[a] These permissible variations are plus or minus. If variation is desired all one way, double the figure indicated.

[b] Camber shall be determined by placing an 8-ft. straightedge against the concave side of the strip.

men will represent the alloy cladding metal in tension on the opposite side.

Permissible Variations in Thickness and Weight

10. Composite plates, sheets, and strips shall conform to the dimensional and weight requirements prescribed in Tables II, III, IV, V, and VI.

Finish

11. (*a*) The material shall be free from injurious defects, shall have a workmanlike appearance, and shall conform to the designated finish.

(*b*) Plate alloy surfaces shall be sandblasted, pickled, or, blast-cleaned and pickled.

(*c*) The finish for the alloy surfaces of sheets and strips shall be as specified in Sections 13 and 14 of the Standard Specifications for Corrosion-Resisting Chromium Steel Plate, Sheet, and Strip (A.S.T.M. Designation: A 176).

Repair of Minor Defects in Alloy Surface

12. (*a*) In plate material, minor defects in the alloy surface, where defects do not penetrate through to the base steel, may be repaired by welding with electrodes of the same analysis. Where defects penetrate to the base steel, repairs may be made only with the approval of the purchaser's inspector.

(*b*) At the request of the purchaser or his inspector, plates shall be reheat treated following repair by welding.

Marking

13. (*a*) Except as specified in Paragraph (*b*), the name or brand of the manufacturer, the manufacturer's test identification number, the class of the base steel, the type number of the alloy cladding metal and the specified minimum tensile strength shall be legibly stamped on each finished single-clad plate in two places on the base steel side not less than 12 in. from the edges. The manufacturer's identification number shall be legibly stamped on each test specimen.

(*b*) For double-clad material or for material under ¼ in. in thickness, the marking specified in Paragraph (*a*) shall be legibly stenciled instead of stamped.

Inspection

14. The manufacturer shall afford the inspector all reasonable facilities, without charge, to satisfy him that the material is being furnished in accordance with these specifications. All tests (except check analysis) and inspection shall be made at the place of manufacture prior to shipment, unless otherwise specified, and shall be so conducted as not to interfere unnecessarily with the operation of the works.

Rejection

15. (*a*) Unless otherwise specified, any rejection based on tests made in accordance with Section 6 shall be reported to the manufacturer within five working days from the receipt of samples by the purchaser.

(*b*) Material which shows injurious defects subsequent to its acceptance at the manufacturer's works will be rejected, and the manufacturer shall be notified.

Rehearing

16. Samples tested in accordance with Section 6 that represent rejected material shall be preserved for three weeks from the date of the test report. In case of dissatisfaction with the results of the tests, the manufacturer may make claim for a rehearing within that time.

TABLE V.—PERMISSIBLE VARIATIONS IN DIMENSIONS OF HOT-ROLLED STRIP.

Specified Thickness	Permissible Variations in Thickness, plus or minus, in.[a]			
	5 in. and Under in Width	Over 5 to 10 in., incl., in Width	Over 10 to 15 in., incl., in Width	Over 15 to 23½ in., incl., in Width
No. 23 to No. 18, incl.	0.003	0.004		
No. 17 to No. 11, incl.	0.004	0.005	0.006	0.007
No. 10 to 0.187 in., incl.	0.005	0.006	0.007	0.008
0.188 to 0.249 in., incl.	0.006	0.007	0.008	0.009

Specified Width	Permissible Variations in Width, in.	
	Plus	Minus
Up to 1 in. by No. 16 B.w.g. and heavier	1/16	1/16
Up to 1 in. by No. 17 B.w.g. and lighter	1/8	1/16
Over 1 to 2 in., incl.	1/8	1/8
Over 2 to 5 in., incl.	3/16	1/8
Over 5 to 10 in., incl.	1/4	1/8
Over 10 to 15 in., incl.	5/16	1/8
Over 15 to 20 in., incl.	3/8	1/8
Over 20 to 23½ in., incl.	7/16	1/8

Specified Length, ft.	Permissible Variations in Length, in.					
	Up to 3 in., in Width		Over 3 to 6 in., in Width		Over 6 in., in Width	
	Plus	Minus	Plus	Minus	Plus	Minus
Up to 5, incl.	1/4	0	5/8	0	1/2	0
Over 5 to 10, incl.	3/8	0	7/8	0	3/4	0
Over 10 to 20, incl.	1/2	0	1 1/8	0	1	0
Over 20 to 30, incl.	3/4	0	1 3/4	0	1 1/2	0
Over 30 to 40, incl.	1	0	1	0	1 1/2	0
Over 40	1 1/2	0	1 1/2	0	1 3/4	0

Camber:

Strip shall be as straight as practicable and not more than ½ in. out of line in any 8 ft. of length, with camber measurement taken on the concave edge.

[a] Thickness measurement shall be taken ⅜ in. from edge of strip.

In the case of center measurements for thickness the permissible variations shall be that for the edge measurement plus the following:

0.001 in. for widths 1½ to 1½ in.
0.002 in. for widths 1½ to 2½ in.
0.003 in. for widths 2½ to 5 in.
0.004 in. for widths 5 to 10 in.
0.005 in. for widths 10 to 15 in.
0.006 in for widths 15 to 23½ in.

TABLE VI.—PERMISSIBLE VARIATIONS IN THICKNESS AND OVERWEIGHTS OF PLATES.

Thickness.[d]

All plates shall be ordered to thickness and not to weight per square foot. No plates shall vary more than 0.01 in. under the thickness ordered, and the overweight of each lot[b] in each shipment shall not exceed the amount given in the table below.

Weight[c]

Specified Thickness, in.	Permissible Excess in Average Weight per Square Foot of Plates for Widths Given, Expressed in Percentage of Nominal Weight								
	Under 48 in.	48 in. to 60 in., excl.	60 in. to 72 in., excl.	72 in. to 84 in., excl.	84 in. to 96 in., excl.	96 in. to 108 in., excl.	108 in. to 120 in., excl.	120 in. to 132 in., excl.	132 in. to 144 in., excl.
3/16 to 1/4, excl.	10.5	12	13.5	15	18			24	28.5
1/4 to 5/16, excl.	9	10.5	12	13.5	15	18	21	21	25.5
5/16 to 3/8, excl.	7.5	9	10.5	12	13.5	15	18	18	22.5
3/8 to 7/16, excl.	7	7.5	9	10.5	12	13.5	15	15	19.5
7/16 to 1/2, excl.	6	7	7.5	9	10.5	12	13.5	13.5	16.5
1/2 to 5/8, excl.	5.5	6	7	7.5	9	10.5	12	13.5	13.5
5/8 to 3/4, excl.	4.5	5.5	6	7	7.5	9	10.5	12	12
3/4 to 1, excl.	4	4.5	5.5	6	7	7.5	9	10.5	12
1, or over	4	4	4.5	5.5	6	7	7.5	9	10.5

[a] Spot grinding is permitted to remove surface imperfections not to exceed 0.01 in. under the specified thickness.
[b] The term "lot" means all of the plates of each group width and each group thickness.
[c] The weight of individual plates shall not exceed the nominal weight by more than one and one-third times the amount prescribed in the above table.

SPECIFICATION FOR NICKEL AND NICKEL-BASE ALLOY CLAD STEEL PLATE

SA-265

(IDENTICAL WITH ASTM SPECIFICATION A 265-43T)

Scope

1. (*a*) These specifications cover plate of a carbon steel or low-alloy steel base to which is integrally and continuously bonded on one or both sides a layer of nickel or nickel-base alloy.

(*b*) This material is considered as single-clad or double-clad nickel or nickel-base alloy clad steel plate, depending on whether one or both sides are covered.

(*c*) The term plate as used in these specifications applies to material $\frac{3}{16}$ in. and over in thickness.

Process

2. (*a*) The base steel shall be made by one or both of the following processes: open-hearth or electric-furnace.

(*b*) The cladding metal may be bonded to the base metal by any method that will produce a clad steel which will conform to the requirements of these specifications.

Heat Treatment

3. Unless heat treatment is agreed upon by the purchaser and the manufacturer, composite plates will be furnished in the as-rolled condition.

Thickness of Cladding Metal

4. The minimum thickness and tolerances on the thickness of the cladding metal shall be agreed upon by the purchaser and the manufacturer.

Chemical Composition

5. (*a*) The composite plate may conform to any desired combination cladding metal and base metal as described in Paragraphs (*b*) and (*c*) and as agreed upon by the purchaser and the manufacturer.

(*b*) *Cladding Metal.*—The nickel or nickel-base alloy cladding metal specified shall conform to the requirements as to chemical composition prescribed for the respective metal in the Specifications for Nickel Plate, Sheet, and Strip (ASTM Designation: B 162), for Nickel-Copper Alloy Plate, Sheet, and Strip (ASTM Designation: B 127), or for Nickel-Chromium-Iron Alloy Plate, Sheet, and Strip (ASTM Designation: B 168).

(*c*) *Base Metal.*—The base metal may be carbon steel or low-alloy steel conforming to the A.S.T.M. specifications for steel of flange quality or better. For low-alloy steels for which A.S.T.M. specifications are not available, the chemical composition shall be as agreed upon by the purchaser and the manufacturer. The base metal shall conform to the requirements of the specifications to which it is ordered. The analysis of the base metal shall be certified to the purchaser by the manufacturer.

Check Analysis

6. (*a*) Check analyses may be required on the finished product only when the composite plate thickness is sufficient to permit obtaining drillings or millings without danger of contamination from the adjacent layer.

(*b*) If check analysis is specified by the purchaser, it shall be made from drillings or millings taken from a broken test specimen. The chemical analysis thus determined shall conform to the requirements prescribed in accordance with Section 5.

Physical Properties

7. (*a*) The physical properties as determined by a tension test on the composite plate shall be equal to or greater than the minimum requirements prescribed in the specifications for the base steel plate used.

(*b*) Two bend tests of the composite plate shall be made, one with the cladding metal in tension and the other with the cladding metal in compression, to determine the ductility of the materials. On double-clad plates, the bend tests shall be made so that one specimen represents the cladding metal in tension on one side while the other specimen represents the cladding metal in tension on the opposite side. Bend tests shall be made according to and shall conform to the requirements prescribed in the specifications for the base metal.

(*c*) When required by the purchaser, three bend tests shall be made with the cladding metal in compression to determine the quality of the bond. Bends shall be made in accordance with the specifications for the base metal. At least two out of the three tests shall show not more than 50 per cent separation on both edges of the bent portion. Greater separation shall be cause for rejection.

(*d*) As an alternative to the bend test provided in Item (*3*) and when required by the purchaser, the minimum shear strength of the cladding and base metals shall be 20,000 psi. The shear test when specified, shall be made in the manner indicated in Fig. 1.

(*e*) *Report.*—The results of these tests shall be reported to the purchaser or his representative.

Test Specimens

8. (*a*) The tension test specimens from plate shall conform to the requirements prescribed in the specifications for the base metal.

(*b*) Bend test specimens shall be taken from the middle of the top of the plate as rolled, at right angles to its longitudinal axis.

(*c*) When required by the purchaser, the shear test specimen shall be taken from a top or bottom corner of the plate as rolled, parallel to its longitudinal axis.

(*d*) All tests shall be made on specimens in the same condition of heat treatment to which the composite plate is furnished.

(*e*) For plates 2 in. and under in thickness, tension and bend test specimens shall be the full thickness of the material and shall be machined to the form and dimensions shown in Fig. 2, or the bend test specimen may be machined with both edges parallel.

(*f*) For plates over 2 in. in thickness, tension and bend test specimens need not be greater in thickness than 2 in. but shall be not less than 2 in.; specimens shall be of the form and dimensions shown in Fig. 2. In reducing the thickness of the specimen, both the cladding metal and the base steel shall be machined so as to maintain the same ratio of the clad metal to base steel as is maintained in the plate, except that the thickness of the clad metal need not be reduced below $\frac{1}{8}$ in. As an alternative method for plates over 2 in. in thickness, the tension test specimens may be machined to the form and dimensions shown in Fig. 3, and the axis of such specimens shall be so located that the ratio of cladding to base metal is the same as existed in the as-rolled thickness. At the option of the manufacturer, the tension tests may be made on the cladding metal and the base steel, tested separately according to the specifications for the respective materials. When test specimens are heat treated separately from the plate they represent, they shall be heat treated in the full composite thickness.

(*g*) The sides of the bend test specimen may have the corners rounded to a radius not over $\frac{1}{16}$ in. for plates, 2 in. and under in thickness, and not over $\frac{1}{8}$ in. for plates over 2 in. in thickness.

(*h*) Any test specimen used for the determination of the minimum thickness of cladding metal shall have distorted metal, due to burning or shearing, completely removed.

Number of Tests

9. (*a*) One or more tension tests, as required by the specifications for the base metal, one face bend test (cladding metal in tension), one reverse bend test (cladding metal in compression), and, when specified, one shear test or three bond bend tests shall be made representing each plate as rolled. Each specimen shall be in the final condition of heat treatment required for the plate.

(*b*) If any test specimen shows defective machining or develops flaws, it may be discarded and another specimen substituted.

(*c*) If the percentage of elongation of any tension test specimen is less than that specified in Section 7 (*a*) and any part of the fracture is more than $\frac{3}{4}$ in. from the center of the gage length of a 2-in. specimen or is outside the middle third of the gage length of an 8-in. specimen, as indicated by scribe scratches marked on the specimen before testing, a retest shall be allowed.

Permissible Variations in Thickness and Weight

10. Composite plates shall conform to the thickness and weight requirements prescribed in Table I.

Finish

11. (*a*) The material shall be free from injurious defects, and shall have a workmanlike appearance.

(*b*) Clad plates shall be furnished in the as-rolled condition, unless otherwise specified.

(*c*) The clad surface may be supplied as-rolled, or as-rolled and sand blasted as specified.

Repair of Minor Defects in Clad Surface

12. Minor defects in the clad surface, where defects do not penetrate through to the base steel, may be repaired by welding with electrodes of the same analysis. Where defects penetrate to the base steel, repairs may be made only with the approval of the purchaser's inspector.

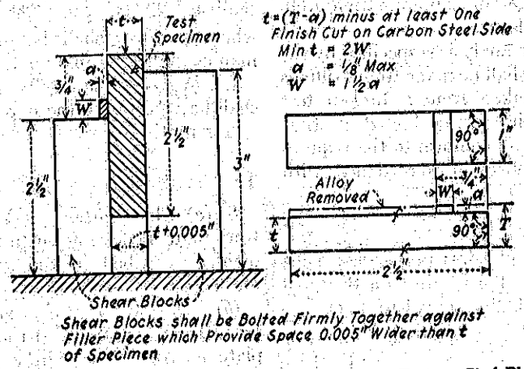

FIG. 1.—Test Specimen and Method of Making Shear Test on Clad Plate

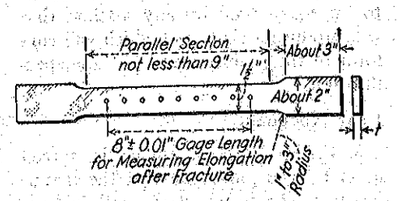

FIG. 2.—Standard Rectangular Tension Test Specimen with 8-in. Gage Length.

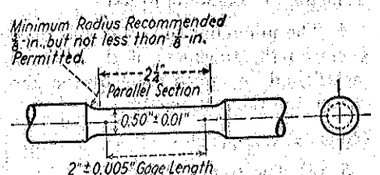

NOTE.—The gage length and fillets shall be as shown, but the ends may be of any shape to fit the holders of the testing machine in such a way that the load shall be axial. The reduced section shall have a gradual taper from the ends toward the center, with the ends 0.003 to 0.005 in. larger in diameter than the center.

FIG. 3.—Standard Round Tension Test Specimen with 2-in. Gage Length.

Marking

13. (*a*) Except as specified in Paragraph (*b*), the name or brand of the manufacturer, the manufacturer's test identification number, the class of the base steel, the designation of the cladding metal, and the specified minimum tensile strength shall be legibly stamped on each finished single-clad plate in two places on the base steel side not less than 12 in. from the edges. The manufacturer's test identification number shall be legibly stamped on each test specimen.

(*b*) For double-clad material or for material under in. $\frac{1}{4}$ in thickness, the marking specified in Paragraph (*a*) shall be legibly stenciled instead of stamped.

Inspection

14. The manufacturer shall afford the inspector, without charge, all reasonable facilities to satisfy him that the material is being furnished in accordance with these specifications. All tests (except check analysis) and inspection shall be made at the place of manufacturer prior to shipment, unless otherwise specified, and shall be so conducted as not to interfere unnecessarily with the operation of the works.

Rejection

15. (*a*) Unless otherwise specified, any rejection based on tests made in accordance with Section 6 shall be reported to the manufacturer within five working days from the receipt of samples by the purchaser.

(*b*) Material which shows injurious defects subsequent to its acceptance at the manufacturer's works will be rejected, and the manufacturer shall be notified.

TABLE I.—PERMISSIBLE VARIATIONS IN THICKNESS AND OVERWEIGHTS OF PLATES.

THICKNESS[a]

All plates shall be ordered to thickness and not to weight per square foot. No plates shall vary more than 0.01 in. under the thickness ordered, and the overweight of each lot[b] in each shipment shall not exceed the amount given in the table below.

WEIGHT[c]

Specified Thickness, in.	Permissible Excess in Average Weight per Square Feet of Plates for Widths Given, Expressed in Percentage of Nominal Weight[d]									
	Under 48 in.	48 in., to 60 in., excl.	60 to 72 in., excl.	72 to 84 in., excl.	84 to 96 in., excl.	96 to 108 in., excl.	108 to 120 in., excl.	120 to 132 in., excl.	132 to 144 in., excl.	144 to 152 in., incl.
3/16 to 1/4, excl.	5.25	6.00	6.75	7.50	9.00	11.50	.....	.....	.....	.....
1/4 to 5/16, excl.	4.50	5.25	6.00	6.75	7.50	10.50	12.00	13.00	14.25	.....
5/16 to 3/8, excl.	3.75	4.50	5.25	6.00	6.75	7.50	9.00	10.00	12.75	16.00
3/8 to 7/16, excl.	3.50	3.75	4.50	5.25	6.00	6.75	7.50	8.50	11.25	15.00
7/16 to 1/2, excl.	3.00	3.50	3.75	4.50	5.25	6.00	6.75	7.50	9.75	12.75
1/2 to 5/8, excl.	2.75	3.00	3.50	3.75	4.50	5.25	6.00	6.75	8.25	10.50
5/8 to 3/4, excl.	2.25	2.75	3.00	3.50	3.75	4.50	5.00	5.50	6.25	6.75
3/4 to 1, excl.	2.00	2.25	2.75	3.00	3.50	3.75	4.25	4.75	5.25	6.00
1 and over	2.00	2.00	2.25	2.75	3.50	3.50	3.75	4.25	4.75	5.25

[a] Spot grinding is permitted to remove surface imperfections not to exceed 0.01 in. under the specified thickness.
[b] The term "lot" means all of the plates of each group width and each group thickness.
[c] The weight of individual plates shall not exceed the nominal weight by more than one and one-third times the amount prescribed in the above table.
[d] Nominal weights for the composite plates shall be calculated using the following weights for the component materials:

	Density, lb. per cu. in.	Weight per Square Foot for Material 1 in. in Thickness, lb.
Steel	0.283	40.80
Nickel	0.321	46.22
Nickel-Copper Alloy	0.319	45.94
Nickel-Chromium-Iron Alloy	0.307	44.21

Rehearing

16. Samples tested in accordance with Section 6 that represent rejected material shall be preserved for three weeks from the date of the test report. In case of dissatisfaction with the results of the tests, the manufacturer may make claim for a rehearing within that time.

SPECIFICATION FOR CARBON-STEEL SEAMLESS DRUM FORGINGS

SA-266

(IDENTICAL WITH ASTM SPECIFICATION A 266-60T)

Scope

1. (*a*) This specification covers three classes of carbon steel hollow drums and headers for use in boilers and other pressure vessels, and also for forgings for heads, covers, plugs, and other component parts of pressure vessels when forgings are desired for these parts. Classes I and II are suitable for fusion welding. Class III is not to be used when it will in any way be subjected to fusion welding. The term class is used to distinguish between materials of different tensile strengths.

(*b*) Supplementary requirements (Paragraphs S1 to S4) of an optional nature are provided. These shall apply only when specified by the purchaser.

Basis of Purchase

2. The purchaser shall specify in the inquiry, contract, and order, the class of steel desired; and any exceptions, modifications, or agreements with regard to the provisions of this specification.

Process

3. The steel shall be made by either or both of the following processes; open-hearth or electric-furnace.

Manufacture

4. (*a*) Large drum forgings shall be made from solid cast ingots, punched bored or trepanned; or from hollow ingots cast in metal molds. Sufficient discard shall be cut from each end to insure that only sound metal enters the completed forging. The walls of the hollowed or hollow ingots shall be reduced in thickness at least one-half by forging on mandrels.

(*b*) Drums with one solid closed end may be hollow forged in closed dies or on a draw bench, provided the metal is worked thoroughly.

(*c*) Small drum forgings may be made as solid forgings, subsequently bored, provided that the purchaser agrees to this method of forging. The cross-sectional area of the solid forgings shall have a reduction by forging from that of the ingot in the ratio of not less than 3 to 1.

(*d*) Sections or component parts of pressure vessels, which are to be subsequently assembled to form drums may be made by expanding on a mandrel under a press or hammer, by hot extrusion, or by ring rolling methods, provided the wall thickness is reduced at least one-half in the process.

(*e*) Where practical, large heads or covers shall be forged as disks, upset from blocks cut from ingots or billets.

Prolongations for Tests

5. Full size prolongations for tests shall be provided on each end of each drum forging except for those sections or component parts manufactured in accordance with Sections 4 (*c*) or 4 (*d*). In such cases when the width of the ring or the length of the solid, or hot extruded, or mandrel forging is less than 80 in. a prolongation for the tests need be provided only on the end of each forging nearest the top of the ingot. For heads or covers, an extension for tests shall be provided on the outside diameter or on the width or thickness of each forging.

Machining

6. (*a*) Forged pressure vessels for steam power service shall have the inner surface machined. Unfired pressure vessels shall have the inner surfaces sufficiently freed from scale to permit inspection, unless otherwise specified.

(*b*) When rough machining is performed it may be done either prior to or after heat treatment at the option of the manufacturer unless specified in accordance with Supplementary Requirement S2.

(*c*) The finish of the outer surfaces, unless otherwise specified (see Supplementary Requirement S4), shall be at the option of the manufacturer.

Heat Treatment

7. (*a*) All forgings shall receive a heat treatment consisting of annealing, or of normalizing followed by tempering, at the manufacturer's option. The tempering temperature shall be not less than 1100 F, the forgings being held at this temperature for at least 1 hr per inch of wall thickness.

(*b*) *Cooling Prior to Heat Treatment.*—After forging and before reheating for heat treatment, the forgings shall be allowed to cool in a manner to prevent injury and to accomplish transformation.

Chemical Composition

8. The steel shall conform to the requirements for chemical composition prescribed in Table I.

Ladle Analysis

9. (*a*) An analysis of each heat of steel shall be made by the manufacturer to determine the percentages of the elements specified in Table I. This analysis shall be made from a test specimen taken during the pouring of the heat. The chemical composition

TABLE I.—CHEMICAL REQUIREMENTS.

Elements	Classes I and II	Class III
Carbon, max, per cent	0.35	0.50
Manganese, per cent	0.40 to 0.90	0.50 to 0.90
Phosphorus, max, per cent	0.040[a]	0.040[a]
Sulfur, max, per cent	0.040	0.040
Silicon, per cent	0.15 to 0.35	0.35 max

[a] For acid steel, the maximum phosphorus content shall be 0.05 per cent.

thus determined shall be reported to the purchaser or his representative and, except as specified in Paragraph (*b*), shall conform to the requirements prescribed in Table I.

(*b*) In the case of large ingots poured from two or more heats, the weighted average of the chemical determinations of the several heats, made in accordance with Paragraph (*a*), shall conform to the requirements prescribed in Table I.

Check Analysis

10. An analysis may be made by the purchaser from a forging representing each heat, except in the case of multiple heat forgings (see Section 9 (*b*)). This analysis shall represent the forging.

TABLE II.—PERMISSIBLE VARIATIONS IN CHECK ANALYSIS.

Elements	Permissible Variations, Over the Maximum Limit or Under the Minimum Limit, per cent		
	200 sq in. and under	Over 200 to 400 sq in., incl	Over 400 to 800 sq in., incl
Carbon	0.04	0.04	0.05
Manganese	0.04	0.05	0.06
Phosphorus	0.010	0.010	0.010
Sulfur	0.010	0.010	0.010
Silicon	0.02	0.03	0.04

TABLE III.—TENSILE REQUIREMENTS.

	Class I	Class II	Class III
Tensile strength, min, psi	60 000	70 000	75 000
Yield point, min, psi	30 000	35 000	37 500
Elongation in 2 in., tangential, min, per cent	23	20	19
Reduction of area, tangential, min, per cent	38	33	30

TABLE IV.—BEND TEST REQUIREMENTS.

Class	Inside Diameter for Bend Test, in.
I	1
II	1¼
III	1½

Samples for analysis may be taken from the forging or from a full size prolongation, at any point midway between the inner and outer surfaces or from the test specimen. The chemical composition thus determined shall not vary from the requirements prescribed in Table I more than the amounts prescribed in Table II.

Tensile Properties

11. (*a*) The material shall conform to the requirements for tensile properties prescribed in Table III, when tested in accordance with the latest issue of the Methods and Definitions for Mechanical Testing of Steel Products (ASTM Designation: A 370)

(*b*) Except as specified herein, tests for acceptance shall be made after final heat treatment of the forgings. When the ends of drums are closed in by reforging after machining, the drums may be treated and tested prior to reforging. After reforging, the whole of the forging shall be simultaneously re-treated. If the original treatment was annealing, the reanneal shall be above the transformation range but not above the temperature of the first anneal. If the original treatment was normalizing and tempering, the retreatment shall be identical with the original.

Bending Properties

12. The bend test specimen shall stand being bent at room temperature through 180 deg without cracking on the outside of the bent portion, to an inside diameter as prescribed in Table IV.

Test Specimens

13. (*a*) One tension test specimen shall be taken from each full size prolongation as prescribed in Section 5, after heat treatment as prescribed in Section 11 (*b*). The axis of the specimen shall be located midway between the inner and outer surfaces of the wall. When specimens are required from opposite ends they shall be taken from the diagonal corners of an axial plane. Unless otherwise specified or agreed upon, the test specimens shall be taken in a tangential direction.

(*b*) One bend test specimen shall be taken from each forging from the full size prolongation nearest the top of the ingot. Unless otherwise specified, the bend test specimen shall be taken in a tangential direction.

(*c*) One tension test specimen shall be taken to represent each single or multiple cover or head forging. Unless otherwise specified, the axis of the specimen shall be located at any point midway between the parallel surfaces of the test extension if added to the periphery or shall be located at any point midway between the center and surface of solid forgings and at any point midway between the inner and outer surfaces of the wall of a hollow or bored forging. Unless otherwise specified, the tension test specimen shall be taken in a tangential direction.

(*d*) The number and location of the tests from forgings made for other parts or attachments to seamless drum forgings made to this specification shall be a matter of agreement between the purchaser and the manufacturer.

(*e*) The tension test specimens shall conform to the standard round tension test specimen with 2-in. gage length as described in Methods A 370.

(*f*) The bend test specimens shall be either ½ in. square in section or 1 by ½ in. in section, with the corners rounded to a radius not over $\frac{1}{16}$ in., and need not exceed 6 in. in length.

Number of Tests

14. Two tension tests and one bend test shall be made from each drum forging except for those drum forgings or component parts having one prolongation for tests as covered in Section 5, in which case one tension test and one bend test shall be made from each forging. One tension test shall be made from each cover or head forging.

Retests

15. (*a*) If the results of the mechanical tests of any forging do not conform to the requirement specified, the manufacturer may re-treat the forging (re-austenitize followed by one or more tempering

cycles), but not more than three additional times, and retest it in accordance with Section 14.

(*b*) If the results of the mechanical tests of any forging do not conform to the requirements specified because a flaw develops in the test specimen during testing, a retest shall be allowed if the defect is not caused by ruptures, cracks, or flakes in the steel.

Workmanship

16. (*a*) The forgings shall conform to the sizes and shapes specified by the purchaser.

(*b*) The thickness of the parallel walls of each forging shall not be less than that specified. If the thickness of a portion of the wall of the forging is less than that specified, due to accidental or unavoidable irregularity, the forgings may be accepted by the purchaser, provided that such irregularity will not require lowering the allowable working pressure below that for which the drum is designed.

Marking

17. Each drum forging shall be legibly stamped by the manufacturer at each end with the name of the manufacturer, the manufacturer's test identification number, the identification number A 266, and the minimum tensile strength for the class of forging specified, except that those forgings having only one test prolongation may be so stamped on one end only. The manufacturer's test identification number shall be legibly stamped on each test specimen.

Inspection

18. The inspector representing the purchaser shall have free entry, at all times while work on the contract of the purchaser is being performed, to all parts of the manufacturer's works which concern the manufacture of the material ordered. The manufacturer shall afford the inspector, without charge, all reasonable facilities, to satisfy him that the material is being furnished in accordance with this specification. All tests (except check analysis) and inspection shall be made at the place of manufacture prior to shipment, unless otherwise specified, and shall be so conducted as not to interfere unnecessarily with the operation of the works.

Rejection

19. (*a*) Any forging having injurious defects observed prior, or subsequent, to acceptance at the manufacturer's works shall be subject to rejection.

(*b*) Unless otherwise specified, any rejection based on tests made in accordance with Section 10 shall be reported to the manufacturer within 60 days from the receipt of samples by the purchaser.

Rehearing

20. Samples tested in accordance with Section 10 that represent rejected material shall be retained for 60 days from the date of the test report. In case of dissatisfaction with the results of the tests, the manufacturer may make claim for rehearing within that time.

SUPPLEMENTARY REQUIREMENTS

One or more of the following supplementary requirements shall apply only when specified by the purchaser in the inquiry, contract, or order. Details of these supplementary requirements shall be agreed upon by the manufacturer and the purchaser.

Grain Size

S1. When forgings are to be subjected to temperatures above 800 F, the austenite grain size of the steel shall be 1 to 5.

NOTE.—For determining grain size, reference should be made to the latest issue of the Standard Classification of Austenite Grain Size in Steels (ASTM Designation: E 19).

Rough Turning and Boring

S2. The position of the rough turning and boring in the sequence of manufacturing operations may be a matter of agreement between the manufacturer and the purchaser.

Rough Machining

S3. Rough machining shall be performed prior to the final tempering operation.

Surface Finish

S4. The inner, outer, or both surfaces of integrally forged vessels shall be machined.

SPECIFICATION FOR SEAMLESS AND WELDED FERRITIC STAINLESS STEEL TUBING FOR GENERAL SERVICE

SA-268

(IDENTICAL WITH ASTM SPECIFICATION A 268-61)

Scope

1. (*a*) These specifications cover six grades of stainless steel tubing for general corrosion-resisting and high-temperature service. These grades are commonly known as the "straight-chromium" types and are characterized by being ferromagnetic. Two of these grades, TP 410 and TP 329 (Table I), are amenable to hardening by heat treatment, and the high-chromium, ferritic alloys are sensitive to notch-brittleness on slow cooling to ordinary temperatures. These features should be recognized in the use of these materials.

NOTE.—Tubing smaller than ¼ in. in diameter or with walls thinner than 0.049 in. may require different mechanical and manipulating tests than prescribed in these specifications. Testing of such tubing shall be a matter of agreement between the manufacturer and the purchaser.

(*b*) The grade desired shall be specified in the order.

(*c*) In specifying dimensions, the purchaser shall specify the outside diameter and average wall thickness. The inside diameter shall not be specified.

Process

2. The steel shall be made by the electric-furnace or other process approved by the purchaser.

Manufacture

3. The tubes shall be made by the seamless or welded process.

Heat Treatment

4. All material shall be furnished in the heat-treated condition unless otherwise agreed between the manufacturer and the purchaser and so specified in the order. This heat treatment shall be performed by a method and at a temperature selected by the manufacturer.

Chemical Composition

5. The steel shall conform to the chemical requirements prescribed in Table I.

TABLE I.—CHEMICAL REQUIREMENTS.

Grade	TP 405	TP 410	TP 430	TP 443	TP 446	TP 329
Carbon, max, per cent	0.08	0.15	0.12	0.20	0.20	0.20
Manganese, max, per cent	1.00	1.00	1.00	1.00	1.50	1.00
Phosphorus, max, per cent	0.040	0.040	0.040	0.040	0.040	0.040
Sulfur, max, per cent	0.030	0.030	0.030	0.030	0.030	0.030
Silicon, max, per cent	0.75	0.75	0.75	0.75	0.75	0.75
Nickel, per cent	0.50 max	0.50 max	0.50 max	0.50 max	0.50 max	2.50 to 5.00
Chromium, per cent	11.5 to 13.5	11.5 to 13.5	14.0 to 18.0	18.0 to 23.0	23.0 to 30.0	23.0 to 28.0
Molybdenum, per cent	....	....	....	....	....	1.0 to 2.0
Aluminum, per cent	0.10 to 0.30	....	....	....	....	....
Copper, per cent	....	....	....	0.90 to 1.25	....	....
Nitrogen, per cent	....	....	....	....	0.10 to 0.25	....

Ladle Analysis

6. An analysis of each heat of steel shall be made to determine the percentages of the elements specified in Section 5. The chemical composition thus determined or a report of check analysis as specified in Section 7(*a*) shall be reported to the purchaser or his representative and shall conform to the requirements specified in Section 5.

Check Analysis

7. (*a*) An analysis of either one billet or one length of flat rolled stock or one tube shall be made from each heat of steel. Samples for chemical analysis, except spectrochemical analysis, shall be taken in accordance with the Method of Sampling Steel, Cast Iron, Open Hearth Iron, and Wrought Iron for Determination of Chemical Composition (ASTM Designation: E 59). The chemical composition thus determined shall conform to the requirements specified in Section 5.

(*b*) If the analysis made in accordance with Paragraph (*a*) does not conform to the requirements specified in Section 5, an analysis of each billet or length of flat rolled stock or tube from the same heat may be made, and all billets, stock, or tubes thus conforming to the requirements shall be accepted so far as chemical composition is concerned.

Tensile Properties

8. (*a*) The material shall conform to the requirements as to tensile properties prescribed in Table II.

(*b*) The yield point shall be determined by the drop of the beam, by the halt in the gage of the testing machine, by the use of dividers, or by other approved methods. When a definite yield point is not exhibited, the yield strength

cycles), but not more than three additional times, and retest it in accordance with Section 14.

(*b*) If the results of the mechanical tests of any forging do not conform to the requirements specified because a flaw develops in the test specimen during testing, a retest shall be allowed if the defect is not caused by ruptures, cracks, or flakes in the steel.

Workmanship

16. (*a*) The forgings shall conform to the sizes and shapes specified by the purchaser.

(*b*) The thickness of the parallel walls of each forging shall not be less than that specified. If the thickness of a portion of the wall of the forging is less than that specified, due to accidental or unavoidable irregularity, the forgings may be accepted by the purchaser, provided that such irregularity will not require lowering the allowable working pressure below that for which the drum is designed.

Marking

17. Each drum forging shall be legibly stamped by the manufacturer at each end with the name of the manufacturer, the manufacturer's test identification number, the identification number A 266, and the minimum tensile strength for the class of forging specified, except that those forgings having only one test prolongation may be so stamped on one end only. The manufacturer's test identification number shall be legibly stamped on each test specimen.

Inspection

18. The inspector representing the purchaser shall have free entry, at all times while work on the contract of the purchaser is being performed, to all parts of the manufacturer's works which concern the manufacture of the material ordered. The manufacturer shall afford the inspector, without charge, all reasonable facilities, to satisfy him that the material is being furnished in accordance with this specification. All tests (except check analysis) and inspection shall be made at the place of manufacture prior to shipment, unless otherwise specified, and shall be so conducted as not to interfere unnecessarily with the operation of the works.

Rejection

19. (*a*) Any forging having injurious defects observed prior, or subsequent, to acceptance at the manufacturer's works shall be subject to rejection.

(*b*) Unless otherwise specified, any rejection based on tests made in accordance with Section 10 shall be reported to the manufacturer within 60 days from the receipt of samples by the purchaser.

Rehearing

20. Samples tested in accordance with Section 10 that represent rejected material shall be retained for 60 days from the date of the test report. In case of dissatisfaction with the results of the tests, the manufacturer may make claim for rehearing within that time.

SUPPLEMENTARY REQUIREMENTS

One or more of the following supplementary requirements shall apply only when specified by the purchaser in the inquiry, contract, or order. Details of these supplementary requirements shall be agreed upon by the manufacturer and the purchaser.

Grain Size

S1. When forgings are to be subjected to temperatures above 800 F, the austenite grain size of the steel shall be 1 to 5.

NOTE.—For determining grain size, reference should be made to the latest issue of the Standard Classification of Austenite Grain Size in Steels (ASTM Designation: E 19).

Rough Turning and Boring

S2. The position of the rough turning and boring in the sequence of manufacturing operations may be a matter of agreement between the manufacturer and the purchaser.

Rough Machining

S3. Rough machining shall be performed prior to the final tempering operation.

Surface Finish

S4. The inner, outer, or both surfaces of integrally forged vessels shall be machined.

SPECIFICATION FOR SEAMLESS AND WELDED FERRITIC STAINLESS STEEL TUBING FOR GENERAL SERVICE

SA-268

(IDENTICAL WITH ASTM SPECIFICATION A 268-61)

Scope

1. (*a*) These specifications cover six grades of stainless steel tubing for general corrosion-resisting and high-temperature service. These grades are commonly known as the "straight-chromium" types and are characterized by being ferromagnetic. Two of these grades, TP 410 and TP 329 (Table I), are amenable to hardening by heat treatment, and the high-chromium, ferritic alloys are sensitive to notch-brittleness on slow cooling to ordinary temperatures. These features should be recognized in the use of these materials.

NOTE.—Tubing smaller than ¼ in. in diameter or with walls thinner than 0.049 in. may require different mechanical and manipulating tests than prescribed in these specifications. Testing of such tubing shall be a matter of agreement between the manufacturer and the purchaser.

(*b*) The grade desired shall be specified in the order.

(*c*) In specifying dimensions, the purchaser shall specify the outside diameter and average wall thickness. The inside diameter shall not be specified.

Process

2. The steel shall be made by the electric-furnace or other process approved by the purchaser.

Manufacture

3. The tubes shall be made by the seamless or welded process.

Heat Treatment

4. All material shall be furnished in the heat-treated condition unless otherwise agreed between the manufacturer and the purchaser and so specified in the order. This heat treatment shall be performed by a method and at a temperature selected by the manufacturer.

Chemical Composition

5. The steel shall conform to the chemical requirements prescribed in Table I.

TABLE I.—CHEMICAL REQUIREMENTS.

Grade	TP 405	TP 410	TP 430	TP 443	TP 446	TP 329
Carbon, max, per cent	0.08	0.15	0.12	0.20	0.20	0.20
Manganese, max, per cent	1.00	1.00	1.00	1.00	1.50	1.00
Phosphorus, max, per cent	0.040	0.040	0.040	0.040	0.040	0.040
Sulfur, max, per cent	0.030	0.030	0.030	0.030	0.030	0.030
Silicon, max, per cent	0.75	0.75	0.75	0.75	0.75	0.75
Nickel, per cent	0.50 max	0.50 max	0.50 max	0.50 max	0.50 max	2.50 to 5.00
Chromium, per cent	11.5 to 13.5	11.5 to 13.5	14.0 to 18.0	18.0 to 23.0	23.0 to 30.0	23.0 to 28.0
Molybdenum, per cent	....	....	....	....	....	1.0 to 2.0
Aluminum, per cent	0.10 to 0.30	....	....	....	....	....
Copper, per cent	....	....	....	0.90 to 1.25	....	....
Nitrogen, per cent	....	....	....	....	0.10 to 0.25	....

Ladle Analysis

6. An analysis of each heat of steel shall be made to determine the percentages of the elements specified in Section 5. The chemical composition thus determined or a report of check analysis as specified in Section 7(*a*) shall be reported to the purchaser or his representative and shall conform to the requirements specified in Section 5.

Check Analysis

7. (*a*) An analysis of either one billet or one length of flat rolled stock or one tube shall be made from each heat of steel. Samples for chemical analysis, except spectrochemical analysis, shall be taken in accordance with the Method of Sampling Steel, Cast Iron, Open Hearth Iron, and Wrought Iron for Determination of Chemical Composition (ASTM Designation: E 59). The chemical composition thus determined shall conform to the requirements specified in Section 5.

(*b*) If the analysis made in accordance with Paragraph (*a*) does not conform to the requirements specified in Section 5, an analysis of each billet or length of flat rolled stock or tube from the same heat may be made, and all billets, stock, or tubes thus conforming to the requirements shall be accepted so far as chemical composition is concerned.

Tensile Properties

8. (*a*) The material shall conform to the requirements as to tensile properties prescribed in Table II.

(*b*) The yield point shall be determined by the drop of the beam, by the halt in the gage of the testing machine, by the use of dividers, or by other approved methods. When a definite yield point is not exhibited, the yield strength

corresponding to a permanent offset of 0.2 per cent of the gage length of the specimen, or to a total extension of 0.5 per cent of the gage length under load shall be determined.

Flaring Test

9. With the exception of grade TP 329 for which no flaring test is required, a section of tube approximately 4 in. in length shall stand being flared with a tool having a 60-deg included angle until the tube at the mouth of the flare has been expanded 10 per cent of the inside diameter, without cracking or showing flaws.

Hardness Test

10. (*a*) The Brinell hardness test may be made on the outside of the tube near the end or on the outside of a specimen cut from the tube, at the option of the manufacturer. Except as specified in Section 12(*b*), Rockwell hardness tests shall be made on the inside of a specimen cut from the tube. For tube less than $\frac{1}{2}$ in. in outside diameter, it is permissible to perform the hardness test on the surface of the outside diameter of the tube.

(*b*) The tube shall show the hardness prescribed in Table III.

TABLE II.—TENSILE REQUIREMENTS.[a]

Grade	TP 405	TP 410	TP 430	TP 443	TP 446	TP 329
Tensile strength, min, psi	60 000	60 000	60 000	70 000	70 000	75 000
Yield point, min, psi	30 000	30 000	35 000	40 000	40 000	45 000
Elongation[c] in 2 in., min, per cent	20	20	20	20	18	10[b]

[a] For longitudinal strip tests, the width of the gage section shall be 1 in. and a deduction of 1 per cent from the basic minimum elongation for each $\frac{1}{32}$-in. decrease in wall thickness below $\frac{5}{16}$ in. in wall thickness shall be permitted.

[b] In no case shall the minimum elongation be less than 5 per cent.

[c] Not applicable to tubes less than $\frac{1}{8}$ in. in outside diameter or less than 0.015 in. in wall thickness, or both. The tensile properties of such small diameter or thin wall tubes are a matter of agreement between manufacturer and purchaser. For tubing having an outside diameter of $\frac{3}{8}$ in. or less, the gage length shall be four times the outside diameter in order to obtain elongation values comparable to the larger sizes (see the Methods and Definitions for Mechanical Testing of Steel Products (ASTM Designation: A 370)).

TABLE III.—HARDNESS REQUIREMENTS.

Grade	TP 405	TP 410	TP 430	TP 443	TP 446	TP 329
Brinell hardness, max	207	207	190	207	207	241
Rockwell hardness, B scale, max	95	95	90	95	95	100

Hydrostatic Test

11. Prior to upsetting, swaging, expanding, bending, or other forming operations, each tube shall be tested at the mill to a hydrostatic pressure of at least 1000 lb, provided the resulting fiber stress calculated in accordance with the formula given below does not exceed 15,000 psi. Should the fiber stress corresponding to this pressure exceed the above figure, the hydrostatic test pressure shall be determined by the following formulas:

$$P = \frac{2St}{D} \text{ or } S = \frac{PD}{2t}$$

where:

P = hydrostatic test pressure in pounds per square inch,
S = allowable fiber stress of 15,000 psi,
t = nominal wall thickness of tube in inches, and
D = outside diameter of tube in inches

Test Specimens and Methods of Testing

12. (*a*) The test specimens and the tests required by these specifications shall conform to those described in the Methods and Definitions for Mechanical Testing of Steel Products (ASTM Designation: A 370).

(*b*) On tubes furnished with upset, swaged, or otherwise formed ends, the hardness test specified in Section 10 shall be made on the outside of the tubes near the end after the forming operations.

(*c*) All specimens shall be tested at room temperature.

Number of Tests

13. (*a*) From each group of 100 finished tubes or fraction thereof, one tube shall be selected at random for the tension test specified in Section 8.

(*b*) With the exception of grade TP 329 (Section 9) two tubes shall be selected at random from each lot[4] of finished tubes, heat-treated in a batch-type furnace, for the flaring tests specified in Section 9. One end of each of these tubes shall be tested in this manner. For the purpose of calculating the number of tests on tubes heat treated by the continuous process, the number of tubes in a heat-treated lot[4] shall be determined from the size of tubes as follows:

Size of Tube	Size of Lot
2 in. and over in outside diameter and 0.200 in. and over in wall thickness	not more than 50 tubes
Less than 2 in. but over 1 in. in outside diameter or over 1 in. in outside diameter and under 0.200 in. in wall thickness	not more than 75 tubes
1 in. or less in outside diameter	not more than 125 tubes

(*c*) Five per cent of all tubes shall be selected and a hardness test shall be made on each of these as specified in Section 10.

(*d*) When more than one heat is involved, the test requirements specified in Paragraphs (*b*) and (*c*) shall apply to each heat.

(*e*) Each tube shall be subjected to the hydrostatic test specified in Section 11.

Retests

14. If the results of the mechanical tests of any group or lot do not conform to the test requirements specified in Sections 8, 9, and 10, retests may be made on additional tubes of double the original number from the same group or lot, each of which shall conform to the requirements specified.

Retreatment

15. If individual tubes or tubes selected to represent any group or lot fail to conform to the test requirements specified in Sections 8, 9, and 10, the individual tubes or group or lot represented may be retreated and resubmitted for test. Only two reannealing treatments shall be permitted.

[4] The term "lot" applies to all tubes of the same nominal size and wall thickness (or schedule) which are produced from the same heat of steel and subjected to the same finishing treatment in a continuous furnace; when final heat treatment is in a batch-type furnace, the lot shall include only those tubes which are heat-treated in the same furnace charge. When no heat treatment is performed following final forming operations, the lot shall include hot-rolled material only or cold-drawn material only.

Permissible Variations in Dimensions

16. Variations in outside diameter, wall thickness, and length from those specified shall not exceed the amounts prescribed in Table IV.

Finish

17. (*a*) Finished tubes shall be reasonably straight and have smooth ends free from burrs. They shall be free from injurious defects and shall have a workmanlike finish. Minor defects may be removed by grinding, provided the wall thicknesses are not decreased to less than that permitted in Section 16.

(*b*) All tubes shall be free from excessive mill scale, suitable for inspection. A slight amount of oxidation shall not be considered as scale. Any special finish requirements shall be subject to agreement between the manufacturer and the purchaser.

Marking

18. (*a*) The name or brand of the manufacturer, the grade (such as TP 405, TP 410, etc.) of material from which it is made, and ASTM A 268 shall be legibly stenciled on each tube or marked on a tag attached to the individual tube or bundle or box of tubes as prepared for shipment.

(*b*) When it is specified that certain requirements of these specifications are to be completed by the purchaser upon receipt of the material, the manufacturer shall indicate that all requirements of the specifications have not been completed by a letter X, Y, or Z immediately following the specification number. This letter may be removed after completion of all requirements in accordance with these specifications. An explanation of specification requirements to be completed is provided in Section 19(*b*).

Inspection

19. (*a*) The inspector representing the purchaser shall have free entry, at all times while work on the contract of the purchaser is being performed, to all parts of the manufacturer's works which concern the manufacture of the material ordered. The manufacturer shall afford the inspector, without charge, all reasonable facilities to satisfy him that the material is being furnished in accordance with these specifications. All tests and inspection shall be made at the place of manufacture prior to shipment, unless otherwise specified, and shall be so conducted as not to interfere unnecessarily with the operation of the works.

(*b*) *Certification.*—When inspection at the place of manufacture has been waived by the purchaser, the manufacturer shall furnish on request a statement that the material has been tested and has met all requirements of these specifications. The certificate or report accomplished by the manufacturer shall include a statement of explanation for the letter added to the specification number (see Section 18(*b*), when all the requirements of these specifications have not been completed. The purchaser must certify that all requirements of the specifications have been completed before removal of the letter X, Y, or Z.

TABLE IV.—PERMISSIBLE VARIATIONS IN DIMENSIONS.

Group	Size, Outside Diameter, in.	Permissible Variations in Outside Diameter, in.	Permissible Variations in Wall Thickness,[a] per cent	Ovality shall be double the permissible variations in outside diameter when wall thickness is	Permissible Variations in Cut Length, in.[b] Over	Under
1	Up to $\frac{1}{2}$, excl	±0.005	±15	.....	$\frac{1}{8}$	0
2	$\frac{1}{2}$ to $1\frac{1}{2}$, excl	±0.005	±10	less than 0.065 in.	$\frac{1}{8}$	0
3	$1\frac{1}{2}$ to $3\frac{1}{2}$, excl	±0.010	±10	less than 0.095 in.	$\frac{3}{16}$	0
4	$3\frac{1}{2}$ to $5\frac{1}{2}$, excl	±0.015	±10	less than 0.150 in.	$\frac{3}{16}$	0
5	$5\frac{1}{2}$ to 8, excl	±0.030	±10	.....	$\frac{3}{16}$	0

[a] When tubes as ordered require wall thicknesses $\frac{3}{4}$ in. or over, or an inside diameter 60 per cent or less of the outside diameter, a wider variation in wall thickness is required. On such sizes a variation in wall thickness of 12.5 per cent over or under will be permitted.

For tubes less than $\frac{1}{8}$ in. in inside diameter which cannot be successfully drawn over a mandrel, the wall thickness may vary ±15 per cent from that specified.

[b] These tolerances apply to cut lengths up to and including 24 ft. For lengths over 24 ft an additional over tolerance of $\frac{1}{8}$ in. for each 10 ft or fraction thereof shall be permissible up to a maximum of $\frac{1}{2}$ in.

Rejection

20. (*a*) When inspection at the place of manufacture has been waived by the purchaser, any rejection based on tests made in accordance with Section 7 shall be reported to the manufacturer, within five working days from receipt of samples by the purchaser.

(*b*) Tubes which fail in the process of installation shall be set aside and the manufacturer notified.

Rehearing

21. When inspection at the place of manufacture has been waived by the purchaser, samples tested in accordance with Section 7 that represent rejected tubes shall be preserved for two weeks from the date of the test report. In case of dissatisfaction with the results of the tests, the manufacturer may make claim for a rehearing within that time.

SPECIFICATION FOR GRAY IRON CASTINGS FOR PRESSURE-CONTAINING PARTS FOR TEMPERATURES UP TO 650 F

SA-278

(IDENTICAL WITH ASTM SPECIFICATION A 278-61T)

Scope

1. These specifications cover gray iron for castings suitable for pressure-containing parts for use at temperatures up to 650 F.

Manufacture

2. (*a*) The melting procedure shall be optional with the foundry.

(*b*) Castings intended for use above 450 F shall be stress relief annealed. The castings and test bars shall be stress relieved by placing them in a suitable furnace at a temperature not exceeding 400 F, heating them uniformly to the temperatures and for the times specified in Table I. The heating and cooling rates shall be uniform and shall not be more than 400 F per hr for castings of 1 in. maximum section, nor more than 400 F divided by the maximum section thickness in inches for thicker castings.

(*c*) Castings of classes Nos. 50 and 60 which are to be used at temperatures below 450 F and not stress relieved in accordance with Paragraph (*b*), shall be relieved of stress by cooling them in the mold or by other means, from the pouring temperature to 500 F at an average rate of not more than 100 F per hr for castings up to 1 in. in section, nor more than 100 F divided by the maximum thickness in inches for sections greater than 1 in.

Tensile Strength Classification

3. (*a*) Gray iron castings conforming to these specifications shall be known and listed by classes according to the following minimum requirements as to tensile strengths of test bars:

Class	Tensile Strength, min, psi
No. 20	20 000
No. 25	25 000
No. 30	30 000
No. 35	35 000
No. 40	40 000
No. 50	50 000
No. 60	60 000

(*b*) For temperatures above 450 F, only classes 40, 50 and 60 shall be used.

TABLE I.—STRESS RELIEVING REQUIREMENTS.

Class	Metal Temperature, deg Fahr	Holding Time, hr[a]	
		Minimum	Maximum
40, 50, 60	1050 to 1200	2	12

[a] In no case shall the holding time be less than 1 hr per in. of maximum metal section, or in excess of 12 hr maximum, dependent upon which governs.

Correlation of Test Bars and Castings

4. (*a*) The purchaser shall designate the controlling section, but the manufacturer and purchaser shall be in agreement as to the size and type of the test bar or coupon which will best represent the quality of the iron in the casting, before the latter is made.

(*b*) Castings weighing less than 2000 lb each and having controlling sections less than 2 in. in thickness, shall be represented by separately cast test bars. Castings in this weight range processed in continuous production from the same melt, may be approved on the basis of one test per hour. Castings poured intermittently during the day, but from iron of the same melt and strength classification, for which test bars are taken at the beginning, middle and end of heat during an 8-hr day, or alternately, every 4 hr, may be grouped in lots not exceeding 4000 lb each, and submitted as single test units.

(*c*) Castings which weigh in excess of 2000 lb, or which have a controlling section 2 in. or more in thickness, or both, may be represented either by a coupon cast integral with the casting, or by a separately cast bar or coupon. In either case, the cooling rate of the test bar shall closely approximate that of the controlling section of the casting represented. The approximate cooling rate of the casting may be achieved by selecting a test bar with the same surface to volume ratio.

(*d*) Three diameters of separately cast test bars and the controlling sections which they normally represent are given in the following table and are considered standard under these specifications (see Fig. 1). A special provision is made for controlling sections exceeding 2 in.

Controlling Section of Casting, in.	Test Bar	Nominal Diameter of Test Bar as Cast, in.
0.50 and under	A	0.875
0.51 to 1.00	B	1.20
1.01 to 2.00	C	2.00
Over 2.00	...	[a]

[a] A larger test bar shall be used in accordance with Section 4(*a*).

(*e*) For castings having a controlling section greater than 2 in., where it is impractical to establish a satisfactory degree of correlation between test bars and castings, the castings shall be considered as having met the tensile strength of the class specified when test coupons cut from the castings or integral projections thereof, the cross-section of which is not less than that of the controlling section of the casting, have a tensile strength not less than 80 per cent of the specified class.

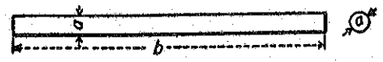

Test Bar	Diameter, in.	Permissible Variations, in.
A	0.875	±0.05
B	1.20	±0.10
C	2.00	±0.10

FIG. 1.—Typical Test Bars.

Molding and Pouring Test Bars

5. (*a*) Integrally cast or separately cast coupons or test bars, other than those listed in Section 4(*d*) shall be made under the same sand conditions as the castings. Separately cast bars shall be poured from the same ladle of iron used to pour the castings.

(*b*) All test bars or coupons shall be heated in the same furnace charge and immediately adjacent to the castings they represent.

Tensile Strength Test Procedure

6. (*a*) Where the half-section of the test coupons equals or exceeds 2 in., the tension test specimen (Specimen C of Fig. 2) shall be taken parallel to the longer axis and midway between the surface and center of the section.

(*b*) Tension test specimens shall be machined to the dimensions shown in Fig. 2, and they shall fit the holders of the testing machine in such a way that the load shall be axial. The use of self-aligning shackles is recommended. After reaching a stress equivalent to 15,000 psi, the speed of the moving head of the testing machine shall not exceed $\frac{1}{8}$ in. (0.125 in.) per min.

Number of Tests

7. (*a*) The manufacturer shall prepare and furnish sufficient test bars to meet the test requirements.

(*b*) If a faulty test bar gives a result not in accordance with these specifications, the result shall be disregarded and another test made.

(*c*) If an apparently sound test specimen fails to conform to these specifications, two retests shall be made. If either retest fails to conform to these specifications, the castings shall be rejected.

Chemical Composition

8. (*a*) It is the intent of these specifications to subordinate chemical composition to mechanical properties. Cast irons for services at temperatures above 450 F shall be limited to class Nos. 40, 50, and 60 having a maximum carbon content equivalent of 3.8 per cent as calculated by the formula: carbon content equivalent equals total carbon + 0.3 (silicon + phosphorus).

(*b*) Further limitations of the chemical composition of class Nos. 40, 50, and 60 shall be:

Phosphorus, max, per cent	0.25
Sulfur, max, per cent	0.12

Marking

9. Pressure-containing castings made in accordance with these specifications shall have the name of the manufacturer, or his recognized trade-mark, and the class of iron to which it conforms, cast or indelibly stamped on a surface indicated by the purchaser or in such a position as not to injure the usefulness of the casting.

Workmanship and Finish

10. (*a*) The castings shall be true to drawing and free from injurious defects. The surface of the castings shall be free from burnt-on sand and reasonably smooth. Risers, fins and projections used to facilitate the making of the casting shall be removed. In other respects, they shall conform to whatever requirements may be especially agreed upon between the manufacturer and purchaser.

(*b*) Surface imperfections or minor defects not exceeding 20 per cent of the thickness of the section may be repaired by plugging provided the diameter of the plug does not exceed its thickness. Seepage around chaplets, and minor leakage defects may be repaired by plugging, as directed above provided a radiographic inspection over the extent of the defect shows that the surrounding metal is sound. Castings showing a major leak under the specified pressure test shall be rejected.

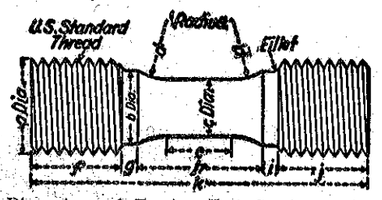

Dimensions of Tension Test Specimens, in.

Dimension	Specimen *A*	Specimen *B*	Specimen *C*
a	$\frac{3}{4}$	$1\frac{1}{4}$	$1\frac{7}{8}$
b	$\frac{5}{8}$	$\frac{15}{16}$	$1\frac{7}{16}$
c	0.505	0.750	1.25
d	1.00	1.00	2.00
e[a]	Shall be equal or greater than *c* (diameter)		
f	1.00	1.00	$1\frac{3}{4}$
g	0.25	0.25	$\frac{5}{16}$
h, min	1.25	1.50	$2\frac{1}{4}$
i	0.25	0.25	$\frac{5}{16}$
j	1.00	1.00	$1\frac{3}{4}$
k, min	3.75	4.00	$6\frac{3}{8}$

[a] Length of parallel.

FIG. 2.—Tension Test Specimens Machined from Typical Test Bars.

Inspection

11. The inspector representing the purchaser shall have free entry, at all times while work on the contract of the purchaser is being performed, to all parts of the manufacturer's works that concern the manufacture of the material ordered. The manufacturer shall afford the inspector, without charge, all reasonable facilities to satisfy him that the material is being furnished in accordance with these specifications. All tests and inspections shall be made at the place of manufacture prior to shipment, unless otherwise specified, and shall be so conducted as not to interfere unnecessarily with the operation of the works.

Acceptance by Certification

12. Upon request of the purchaser and so specified in the purchase order, a certification shall be made the basis of acceptance of the material. This shall consist of a copy of the manufacturer's test report or a statement by the supplier, accompanied by a copy of the test results, that the material has been sampled, tested, and inspected in accordance with the provisions of these specifications. Each certification so furnished shall be signed by an authorized agent of the supplier or manufacturer.

SPECIFICATION FOR LOW AND INTERMEDIATE TENSILE STRENGTH CARBON-STEEL PLATES OF STRUCTURAL QUALITY

(PLATES 2 IN. AND UNDER IN THICKNESS)

SA-283

(IDENTICAL WITH ASTM SPECIFICATION A 283-58)

Scope

1. This specification covers four grades of carbon-steel plates of structural quality for general application, in thicknesses up to 2 in., inclusive.

General Requirements for Delivery

2. Material furnished under this specification shall conform to the applicable requirements of the current edition of Tentative Specification for General Requirements for Delivery of Rolled Steel Plates, Shapes, Sheet Piling, and Bars for Structural Use (A.S.T.M. Designation: A 6).

Process

3. The steel shall be made by one or more of the following processes: open hearth, basic oxygen, or electric furnace.

Chemical Composition

4. When subjected to the ladle and check analyses, respectively, required by the provisions of Specification A 6, the steel shall conform to the requirements as to chemical composition prescribed in Table I.

TABLE I.—CHEMICAL REQUIREMENTS.

	Ladle Analysis	Check Analysis
Phosphorus, max., per cent:		
Acid	0.06	0.075
Basic	0.04	0.05
Sulfur, max., per cent	0.05	0.063
Copper, when copper steel is specified, min., per cent	0.20	0.18

Tensile Properties

5. (*a*) Material as represented by the test specimens shall conform to the requirements as to tensile properties prescribed in Table II.

(*b*) For material under $\frac{5}{16}$ in. in thickness a deduction from the percentage of elongation in 8 in. specified in Table II of 1.25 per cent shall be made for each decrease of $\frac{1}{32}$ in. of the specified thickness below $\frac{5}{16}$ in.

(*c*) For material over $\frac{3}{4}$ in. in thickness a deduction from the percentage of elongation in 8 in. specified in Table II of 0.50 per cent shall be made for each increase of $\frac{1}{8}$ in. of the specified thickness above $\frac{3}{4}$ in. This deduction shall not exceed 3 per cent.

Bending Properties

6. The bend test specimens shall stand being bent cold through 180 deg. without cracking on the outside of the bent portion, to an inside diameter which shall have a relation to the thickness of the specimen as prescribed in Table III.

Number of Tests

7. Two tension and two bend tests shall be made from each heat, unless the finished material from a heat is less than 30 tons, when one tension test and one bend test will be sufficient. If, however, material from one heat differs $\frac{3}{8}$ in. or more in thickness, one tension and one bend test shall be made from both the thickest and thinnest material rolled, regardless of the weight represented.

TABLE II.—TENSILE REQUIREMENTS.

	Grade A	Grade B	Grade C	Grade D
Tensile strength, psi.	45 000 to 55 000	50 000 to 60 000	55 000 to 65 000	60 000 to 72 000[a]
Yield point, min., psi.	24 000	27 000	30 000	33 000
Elongation in 8 in., min., per cent[b]	27	25	23	21
Elongation in 2 in., min., per cent	30	28	27	24

[a] The upper limit of 72,000 psi. may be increased by 3000 psi. for material over 1½ in. in thickness.
[b] See Sections 5 (*b*) and (*c*).

TABLE III.—BEND TEST REQUIREMENTS.

Thickness of Material, in.	Ratio of Inside Diameter of Bend to Thickness of Specimen			
	Grade A	Grade B	Grade C	Grade D
¾ and under	flat on itself	flat on itself	flat on itself	½
Over ¾ to 1, incl.	flat on itself	flat on itself	½	1
Over 1 to 1½, incl.	½	¾	1	1½
Over 1½ to 2, incl.	1	1½	2	2½

SPECIFICATION FOR LOW AND INTERMEDIATE TENSILE STRENGTH CARBON-STEEL PLATES OF FLANGE AND FIREBOX QUALITIES

SA-285

(IDENTICAL WITH ASTM SPECIFICATION A 285-57T)

Scope

1. (*a*) This specification covers three grades of carbon-steel plate, intended for fusion welding, of flange and firebox qualities, of low and intermediate tensile strengths for boilers for stationary service and other pressure vessels.

(*b*) The maximum thickness of plates to be ordered under this specification shall be 2 in.

General Conditions for Delivery

2. Material furnished under this specification shall conform to the applicable requirements of the current edition of the Tentative Specification for General Requirements for Delivery of Rolled Steel Plates of Flange and Firebox Qualities (ASTM Designation: A 20).

Process

3. The steel shall be made by either or both of the following processes: open-hearth or electric-furnace.

Chemical Composition

4. The steel shall conform to the requirements as to chemical composition prescribed in Table I.

Tensile Properties

5. (*a*) The material as represented by the tension test specimens shall conform to the requirements as to tensile properties prescribed in Table II.

(*b*) On the tension test specimen taken from the top of firebox plates, tensile strength only is to be determined, and it shall not exceed 60,000 psi. for grade A, 65,000 psi. for grade B, nor 70,000 psi. for grade C.

(*c*) For material under $\frac{5}{16}$ in. in thickness, a deduction from the percentage of elongation in 8 in. specified in Table II of 1.25 per cent shall be made for each decrease of $\frac{1}{32}$ in. of the specified thickness below $\frac{5}{16}$ in.

(*d*) For material over $\frac{3}{4}$ in. in thickness, a deduction from the percentage of elongation in 8 in. specified in Table II of 0.5 per cent shall be made for each increase of $\frac{1}{8}$ in. of the specified thickness above $\frac{3}{4}$ in. This deduction shall not exceed 3 per cent.

TABLE I.—CHEMICAL REQUIREMENTS.

	Flange			Firebox		
	Grade A	Grade B	Grade C	Grade A	Grade B	Grade C
Carbon, max., per cent:						
For plates ¾ in. and under in thickness	[a]	[a]	[a]	0.15	0.20	0.25
For plates over ¾ in. to 2 in. incl. in thickness	[a]	[a]	[a]	0.17	0.22	0.30
Manganese, max., per cent	0.80	0.80	0.80	0.80	0.80	0.80
Phosphorus, max., per cent:						
Acid	0.05	0.05	0.05	0.04	0.04	0.04
Basic	0.04	0.04	0.04	0.035	0.035	0.035
Sulfur, max., per cent	0.05	0.05	0.05	0.04	0.04	0.04
Copper, when copper steel is specified, per cent:[b]						
Ladle analysis	0.20 to 0.35	0.20 to 0.35	0.20 to 0.35	0.20 to 0.35	0.20 to 0.35	0.20 to 0.35
Check analysis	0.18 to 0.37	0.18 to 0.37	0.18 to 0.37	0.18 to 0.37	0.18 to 0.37	0.18 to 0.37

[a] The required mechanical properties and current mill practice normally result in the carbon content not exceeding 0.35 per cent. However, determination of this element or certification that this limit is complied with shall be made only when specified in the inquiry and contract or order.
[b] When specified, the maximum incidental copper content shall be 0.25 per cent.

TABLE II.—TENSILE REQUIREMENTS.

	Flange			Firebox		
	Grade A	Grade B	Grade C	Grade A	Grade B	Grade C
Tensile strength, psi.	45 000 to 55 000	50 000 to 60 000	55 000 to 65 000	45 000 to 55 000[a]	50 000 to 60 000[a]	55 000 to 65 000[a]
Yield point, min., psi.	24 000	27 000	30 000	24 000	27 000	30 000
Elongation in 8 in. min., per cent[b]	28	26	24	29	27	25
Elongation in 2 in., min., per cent	31	29	28	32	30	29

[a] See Section 5(*b*).
[b] See Section 5(*c*) and (*d*).

TABLE III.—BEND DIAMETERS.

Thickness of Material, in.	Ratio of Inside Diameter of Bend to Thickness of Specimen	
	Sheared and Gas Cut Plate	Universal Mill Plate
1 and under	1	1½
Over 1 to 1½, incl.	1½	2½
Over 1½ to 2, incl.	2	3

Bending Properties

6. The bend test specimens shall stand being bent cold through 180 deg. without cracking on the outside of the bent portion to an inside diameter which shall have the relation to the thickness of the specimen prescribed in Table III. The requirements for universal edge-rolled plates, apply only when such plates are permitted for double butt-strap construction.

Test Specimens

7. (*a*) Test specimens shall be prepared for testing from material in its rolled conditon.

(*b*) When so specified on the purchase order with the mill, test specimens representing the plates shall be stress-relieved by gradually and uniformly heating them to a temperature between 1100 and 1200 F. (or a temperature range otherwise agreed upon between the manufacturer and the fabricator), holding at a temperature for at least 1 hr. per inch of thickness and cooling in still atmosphere to a temperature not exceeding 600 F.

Number of Tests

8. Two tension tests, one bend test and one homogeneity test shall be made from each firebox steel plate as rolled. One tension test and one bend test shall be made from each flange steel plate as rolled.

NOTE.—The term "plate as rolled" used here refers to the unit plate rolled from a slab or directly from an ingot in its relation to the location and number of specimens; not to its condition.

SPECIFICATION FOR CORROSION-RESISTING CHROMIUM AND CHROMIUM-NICKEL STEEL COVERED WELDING ELECTRODES

SA-298

(IDENTICAL WITH ASTM SPECIFICATION A 298-55T)

Scope

1. These specifications prescribe requirements for covered chromium and chromium-nickel steel electrodes yielding deposited weld metal in which chromium exceeds 4 per cent and nickel does not exceed 50 per cent.

NOTE.—No attempt has been made to classify all grades of electrodes within the limits of the above scope; only the more commonly used have been included.

PART I.—CLASSIFICATION AND ACCEPTANCE

Classification

2. (*a*) The electrodes are classified on the basis of chemical analysis of the weld metal and usability characteristics as specified in Table I.

(*b*) Any electrode classified under one classification shall not be classified under any other classification.

NOTE.—The test requirements of these specifications establish minimum quality levels which will assure suitability of the electrode for the usual applications. The guide appended to these specifications describes the more common applications and suggests test procedures should the intended application warrant additional tests.

Manufacture

3. The electrodes may be made by any method that will yield a product conforming to the requirements of these specifications.

Chemical Composition

4. The electrodes shall be capable of depositing weld metal conforming to the requirements as to chemical composition prescribed in Table II.

Physical Tests

5. (*a*) The following tests are prescribed to demonstrate the mechanical properties and soundness of the deposited metal and the usability of the electrodes classified herein:

(*1*) An all-weld-metal tension test (See Section 19).

(*2*) A fillet-weld test (See Section 20).

(*b*) Tests shall be performed when and as prescribed by the electrode manufacturer.

(*c*) At the option and expense of the purchaser either or both of the foregoing tests may be used as a basis for acceptance of electrodes.

Methods of Test

6. Test specimens shall be prepared in kind and in number as specified in Table III and tests shall be conducted in accordance with Sections 16 to 20 of these specifications.

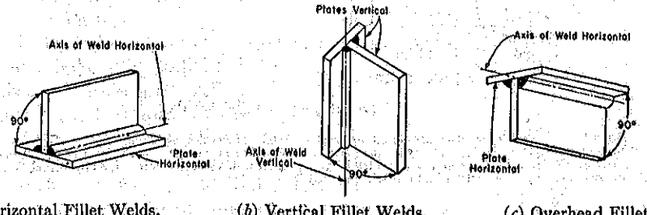

(*a*) Horizontal Fillet Welds. (*b*) Vertical Fillet Welds. (*c*) Overhead Fillet Welds.

FIG. 1.—Positions of Test Plates for Welding Fillet-Weld Test Specimens.

TABLE I.—USABILITY CHARACTERISTICS OF ELECTRODES.

AWS-ASTM Classification No.	Current[a]	Position of Welding[b]
E308-15	dc	F, V, OH, H
E308-16	ac or dc	F, V, OH, H
E308ELC-15	dc	F, V, OH, H
E308ELC-16	ac or dc	F, V, OH, H
E309-15	dc	F, V, OH, H
E309-16	ac or dc	F, V, OH, H
E309Cb-15	dc	F, V, OH, H
E309Cb-16	ac or dc	F, V, OH, H
E309Mo-15	dc	F, V, OH, H
E309Mo-16	ac or dc	F, V, OH, H
E310-15	dc	F, V, OH, H
E310-16	ac or dc	F, V, OH, H
E310Cb-15	dc	F, V, OH, H
E310Cb-16	ac or dc	F, V, OH, H
E310Mo-15	dc	F, V, OH, H
E310Mo-16	ac or dc	F, V, OH, H
E312-15	dc	F, V, OH, H
E312-16	ac or dc	F, V, OH, H
E316-15	dc	F, V, OH, H
E316-16	ac or dc	F, V, OH, H
E316ELC-15	dc	F, V, OH, H
E316ELC-16	ac or dc	F, V, OH, H
E317-15	dc	F, V, OH, H
E317-16	ac or dc	F, V, OH, H
E318-15	dc	F, V, OH, H
E318-16	ac or dc	F, V, OH, H
E330-15	dc	F, V, OH, H
E330-16	ac or dc	F, V, OH, H
E347-15	dc	F, V, OH, H
E347-16	ac or dc	F, V, OH, H
E410-15	dc	F, V, OH, H
E410-16	ac or dc	F, V, OH, H
E430-15	dc	F, V, OH, H
E430-16	ac or dc	F, V, OH, H
E502-15	dc	F, V, OH, H
E502-16	ac or dc	F, V, OH, H

[a] Where dc is specified, reverse polarity (electrode positive) is required.

[b] The abbreviations F, V, OH, and H indicate welding positions (Fig. 1) as follows:
F = Flat V = Vertical and
H = Horizontal OH = Overhead.

TABLE II.—CHEMICAL REQUIREMENTS FOR ALL-WELD METAL.

NOTE.—Single values shown are maximum percentages except where otherwise specified.

AWS-ASTM Classification Number	Carbon,[a] per cent	Chromium, per cent	Nickel, per cent	Molybdenum, per cent	Columbium plus Tantalum, per cent	Manganese, per cent	Silicon, per cent	Phosphorus, per cent	Sulfur, per cent
E308	0.08	18.0 to 21.0	9.0 to 11.0	....	....	2.50	0.90	0.04	0.03
E308ELC	0.04	18.0 to 21.0	9.0 to 11.0	....	....	2.50	0.90	0.04	0.03
E309	0.15	22.0 to 25.0	12.0 to 14.0	....	....	2.50	0.90	0.04	0.03
E309Cb	0.12	22.0 to 25.0	12.0 to 14.0	....	0.70 to 1.00	2.50	0.90	0.04	0.03
E309Mo	0.12	22.0 to 25.0	12.0 to 14.0	2.00 to 3.00	....	2.50	0.90	0.04	0.03
E310	0.20	25.0 to 28.0	20.0 to 22.0	....	....	2.50	0.75	0.03	0.03
E310Cb	0.12	25.0 to 28.0	20.0 to 22.0	....	0.70 to 1.00	2.50	0.90	0.04	0.03
E310Mo	0.12	25.0 to 28.0	20.0 to 22.0	2.00 to 3.00	....	2.50	0.90	0.04	0.03
E312	0.15	26.0 to 31.0	8.5 to 10.5	....	....	2.50	0.75	0.04	0.03
E316	0.08	17.0 to 20.0	11.0 to 14.0	2.00 to 2.50	....	2.50	0.90	0.04	0.03
E316ELC	0.04	17.0 to 20.0	11.0 to 14.0	2.00 to 2.50	....	2.50	0.90	0.04	0.03
E317	0.08	18.0 to 21.0	12.0 to 14.0	3.00 to 4.00	....	2.50	0.90	0.04	0.03
E318	0.08	17.0 to 20.0	11.0 to 14.0	2.00 to 2.50	6 × C min to 1.00 max	2.50	0.90	0.04	0.03
E330	0.25	14.0 to 17.0	33.0 min	....	....	2.50	0.90	0.04	0.03
E347	0.08	18.0 to 21.0[b]	9.0 to 11.0	....	8 × C min to 1.00 max	2.50	0.90	0.04	0.03
E410	0.12	11.0 to 14.0	0.60	....	....	1.00	0.90	0.04	0.03
E430	0.10	15.0 to 18.0	0.60	....	....	1.00	0.90	0.04	0.03
E502	0.10	4.0 to 6.0	0.40	0.45 to 0.65	....	0.75	0.90	0.04	0.03

[a] Carbon shall be analyzed to the nearest 0.01 per cent.
[b] Chromium shall be 1.9 × Ni, min, when so specified.

Electrode Diameter, in.	Thickness of Plate, t, in.	Position of Welding	Required Fillet Size max, in.
1/8	1/4	V	1/4
		H and OH	3/16
5/32	1/4	V	5/16
		H and OH	1/4
3/16	3/8	H	5/16
1/4	3/8	H	3/8

NOTE.—When testing 18-in. end grip electrodes length shall be 15 in., min.

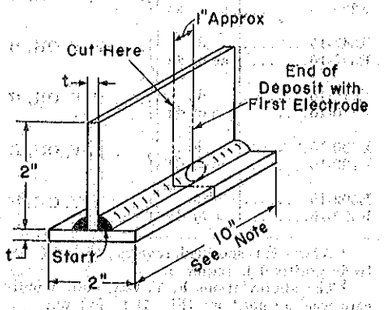

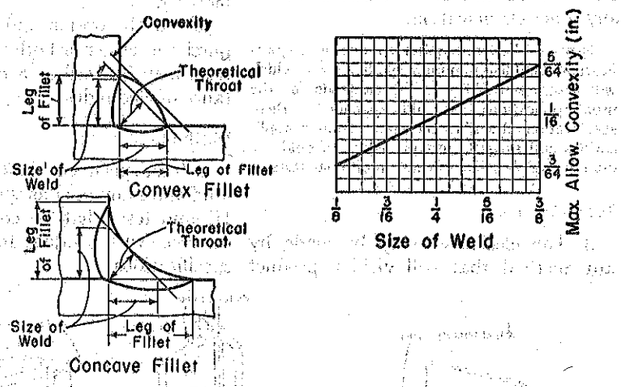

Dimensions of Fillet Welds.

NOTE 1.—Size of fillet weld = Leg length of largest inscribed isosceles right triangle.
NOTE 2.—Length of horizontal leg of fillet weld shall not vary more than 1/16 in. from length of vertical leg.
NOTE 3.—Fillet weld size, convexity and leg lengths of fillet welds shall be determined by actual measurement (to nearest 1/64 in.) on a section laid out with scribed lines as shown.

FIG. 2.—Fillet-Weld Test.

TABLE III.—SUMMARY OF TEST REQUIREMENTS.

Electrode		Current[a]	Position of Welding		
Designation (All Classifications)	Diameter, in.		Chemical Analysis[b]	All-Weld-Metal Tension Test[c]	Fillet-Weld Test[d]
−15	1/16, 5/64, 3/32	dc	F	not required	not required
	1/8, 5/32	dc	F	F	V and OH
	3/16, 1/4	dc	F	F	H
−16	1/16, 5/64, 3/32	ac and dc	F	not required	not required
	1/8, 5/32	ac and dc	F	F	V and OH
	3/16, 1/4	ac and dc	F	F	H

[a] Where dc is specified, reverse polarity (electrode positive) is required.
[b] See Sections 4 and 18.
[c] See Sections 7 and 19.
[d] See Sections 7 and 20 and Fig. 1.

Test Requirements

7. In order to be classified under these specifications an electrode shall be capable of yielding the following physical test results in addition to the chemical requirements prescribed in Section 4:

(*a*) The all-weld-metal tension test specimens shall conform to the requirements prescribed in Table IV.

(*b*) The fillet-weld test specimen shall upon examination be found free from cracks or other open defects affecting its strength. Upon examination of the face that has been polished and etched as prescribed, it is required that:

(*1*) Each fillet shall have penetrated to or beyond the junction of the plate edges,

(*2*) Both legs of each fillet weld shall be of equal length within 1/16 in.,

(*3*) The convexity shall be within the maximum allowable limits prescribed by the graph shown in Fig. 2,

(*4*) The weld and base metal shall show no evidence of cracks, and

(*5*) The weld shall be reasonably free from undercutting, overlap, trapped slag, and porosity.

Retests

8. Retests may be made in accordance with the following:

(*a*) If the all-weld-metal tension test specimen fails, two additional test assemblies shall be prepared and both specimens shall conform to the requirements as to tensile properties prescribed in Table IV.

(*b*) If the fillet-weld test specimen does not meet the requirements prescribed in Section 7, one additional assembly shall be prepared and tested.

Core Wire and Coverings

9. (*a*) The diameter of the core wire shall not vary more than ±0.002 in. from the standard size specified. The length shall not vary more than ±1/4 in. from that specified.

(*b*) The coverings shall be concentric to the extent that the maximum core-plus-one-covering dimension shall not exceed the minimum core-plus-one-covering dimension by more than 5 per cent. The concentricity may be measured by any suitable means.

(*c*) Core wire and coverings shall be free of defects which would interfere with uniform performance of the electrodes.

Exposed Core

10. (*a*) The grip portion of the electrode shall be free from covering for approximately 3/4 in., but not more than 1 1/4 in., for end-grip electrodes; and approximately 1 1/2 in., but not more than 2 in., for center-grip electrodes.

(*b*) The arc end of each electrode shall be sufficiently bare to permit easy striking of the arc. The distance from the arc end to the first point where the full cross-section of the covering prevails shall not exceed the diameter of the core wire. However, for electrodes larger than 1/8 in. the core wire shall not be exposed around more than one-half the circumference at a distance of 1/8 in. or more from the arc end.

Standard Sizes and Lengths

11. Standard sizes and lengths of electrodes are as shown in the following table. In all cases, standard size refers to the diameter of the core wire.

Standard Sizes, Diameter of Core Wire, in.	Standard Lengths, in.
1/16, 5/64, 3/32	9 or 18[a]
1/8, 5/32, 3/16, 1/4	14

[a] Center gripping of 18-in. length electrodes is standard. In all other cases, end gripping is standard.

Electrode Size, in.	Test Plate Thickness, in.	Diameter of Tension Test Specimen, in.	Dimensions of Test Plate and Tension Test Specimen, in.								
	I	A	B	C	D	E	F	G	H	J	K
1/8	1/2	0.252 ± 0.005	1	3/8	2 1/2	1/2	3/16	1 1/4	3	1/4	3/16
5/32 to 1/4, incl.	3/4	0.500 ± 0.010	2	3/4	4 1/2	3/4	3/8	2 1/4	5	1/2	1/4

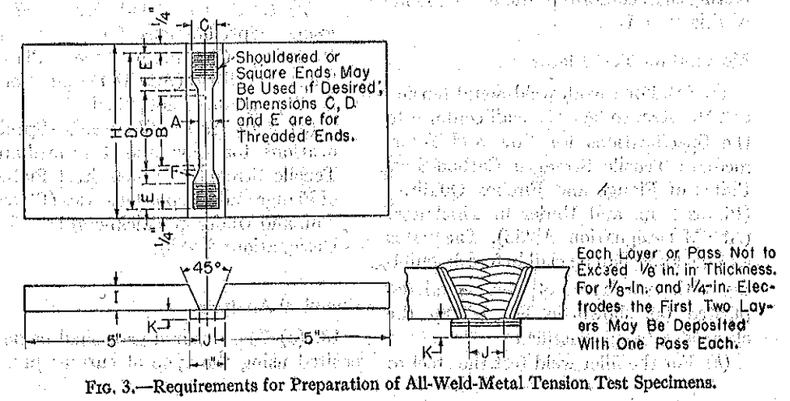

FIG. 3.—Requirements for Preparation of All-Weld-Metal Tension Test Specimens.

Packaging

12. Electrodes shall be packaged in bundles, boxes, or unit packages, not exceeding 75 lb net weight.

Marking

13. Each container shall be legibly marked with the following information:

(*1*) Classification,

(*2*) Manufacturer's name and trade designation, and

(*3*) Standard size and net weight.

Color Markings for Electrode Identification

14. The stub end (or bare portion of center-grip electrodes) shall be color marked to indicate the classification in accordance with the latest edition of the "Standard for Arc-Welding Electrode Identification" of the National Electrical Manufacturers Association.

Guarantee

15. The manufacturer shall guarantee that the electrodes in all sizes and classifications conform to these specifications. The manufacturer's responsibility shall be limited to replacement of any electrodes which do not conform to the requirements of these specifications.

PART II.—DETAILS OF TESTS

Required Tests

16. The tests specified in Sections 4, 5, 6, and 7 shall be conducted in accordance with the requirements of Table III for each size and classification of electrodes using the positions of welding and types of current shown; all of the details of testing shall conform to the requirements of this Part II.

Material for Test Plates

17. (*a*) For the all-weld-metal tension test the steel to be used shall conform to the Specifications for Low and Intermediate Tensile Strength Carbon-Steel Plates of Flange and Firebox Qualities (Plates 2 in. and Under in Thickness) (ASTM Designation: A 285). The plates and backing shall be clad before assembling with two layers of weld metal deposited (as shown in Fig. 3) by the electrodes being classified.

(*b*) For the fillet-weld test the steel to be used shall conform to the following specifications:

(*1*) *E300 Series Electrodes.*—Specifications for Corrosion-Resisting Chromium-Nickel Steel Plate, Sheet, and Strip (ASTM Designation: A 167), grade 3, hot-rolled.

(*2*) *E410 and E430 Series Electrodes.*—Specifications for Corrosion-Resisting Chromium Steel Plate, Sheet, and Strip (ASTM Designation: A 176), grade 4, hot-rolled.

(*3*) *E502 Series Electrodes.*—Specifications for Low and Intermediate Tensile Strength Carbon-Steel Plates of Flange and Firebox Qualities (Plates 2 in. and Under in Thickness) (ASTM Designation: A 285).

TABLE IV.—TENSILE REQUIREMENTS FOR ALL-WELD METAL.

AWS-ASTM Classification No.	Tensile Strength, min, psi	Elongation in 2 in., min, per cent	Heat Treatment
E308	80 000	35	none
E308ELC	75 000	35	none
E309	80 000	35	none
E309Cb	80 000	30	none
E309Mo	80 000	35	none
E310	80 000	30	none
E310Cb	80 000	25	none
E310Mo	80 000	30	none
E312	95 000	22	none
E316	80 000	30	none
E316ELC	75 000	30	none
E317	80 000	30	none
E318	80 000	25	none
E330	75 000	25	none
E347	80 000	30	none
E410	70 000	20	[a]
E430	70 000	20	[b]
E502	60 000	20	[a]

[a] Specimen shall be heated to between 1550 and 1600 F and held for 2 hr, furnace-cooled at a rate not exceeding 100 F per hr to 1100 F, and air-cooled.

[b] Specimen shall be heated to between 1400 and 1450 F and held for 4 hr, furnace-cooled at a rate not exceeding 100 F per hr to 1100 F, and air-cooled.

Chemical Analysis

18. (*a*) The required pads shall be deposited using the type of current prescribed in Table III excepting that where both ac and dc are specified, only one type of current need be used. Pads of weld metal for chemical analysis shall be prepared as prescribed in Paragraphs (*b*) and (*c*), and chemical analyses shall be made from samples machined from the pads in a manner prescribed in Paragraph (*d*).

(*b*) Weld pads made with electrodes of all classifications except E308 ELC and E316 ELC shall be deposited on mild-steel base plates (carbon 0.25 per cent, max). Weld pads made with electrodes of classifications E308 ELC and E316 ELC shall be deposited on steel base plates having a carbon content of 0.03 per cent max. All weld pads shall conform to the following dimensions:

Electrode Size, in.	Pad Size, min, in.
1/16, 5/64, 3/32	1 by 1 by 1/2
1/8, 5/32, 3/16	1 1/2 by 1 1/2 by 1/2
1/4	2 by 2 by 1/2

(*c*) The pads shall be deposited in layers, each pass of which shall measure in width one and a half to two and a half times the diameter of the core wire. After each layer, the pad shall be immersed in water (temperature unimportant) for 30 sec. The arc length shall be as short as practicable, the average arc voltage and current in accordance with the following:

Electrode Diameter, in.	Arc Amperes	Average Arc Voltage max
1/16	35 to 45	24
5/64	45 to 55	24
3/32	65 to 80	24
1/8	90 to 110	25
5/32	120 to 140	26
3/16	160 to 180	27
1/4	220 to 240	28

(*d*) The top surface of the pad shall be removed and discarded and a 1-oz sample for analysis shall be removed by machining, drilling, or milling in such a manner that no metal shall be removed within 1/4 in. from the surface of the base plate. Machining shall be done with high-speed tools and the use of lubricants shall be avoided.

NOTE.—Pads which are too hard for machining may be given an annealing heat treatment (see Table IV).

All-Weld-Metal Tension Test

19. (*a*) Tension tests shall be made as prescribed in Paragraphs (*b*) to (*e*), using the types of current (reverse polarity, if dc) for each size and classification of electrode as shown in Table III. The plates and backing shall be clad before assembling with two layers of weld metal, deposited by the electrodes being classified, as shown in Fig. 3.

(*b*) Plates shall be restrained during welding sufficiently to prevent warpage in excess of 5 deg. A test plate which has warped more then 5 deg shall be discarded. Test plates shall not be straightened.

(*c*) Before starting to weld each pass the test assembly shall be within the temperature ranges enumerated in the accompanying table. If after any pass the maximum temperature specified in the table is exceeded, plates shall be allowed to cool in air. (Do not cool in water.)

AWS-ASTM Classification Number	Interpass Temperature, deg Fahr	
	min	max
E308	60	300
E308ELC	60	300
E309	60	300
E309Cb	60	300
E309Mo	60	300
E310	60	300
E310Cb	60	300
E310Mo	60	300
E312	60	300
E316	60	300
E316ELC	60	300
E317	60	300
E318	60	300
E330	60	300
E347	60	300
E410	300	500
E430	300	500
E502	300	500

(*d*) One all-weld-metal tension test specimen shall be machined from each finished test assembly as shown in Fig. 3.

(*e*) Tension tests shall be conducted in accordance with the Methods of Tension Testing of Metallic Materials (ASTM Designation: E 8).

Fillet-Weld Test

20. (*a*) When a classification of electrode permits its use with more than one type of current, it shall be tested using each type of current.

(*b*) A fillet-welded tee-joint shall be prepared in accordance with Fig. 2, including the dimensions of test plates, positions of welding, and size of fillet-weld prescribed therein for the particular size of electrode being tested.

(*c*) In preparing the two plates forming the test assembly, the standing member shall have one edge machined throughout its length so that when it is set upon the base plate, which shall be straight and smooth, there will be intimate contact for the entire length of the joint.

(*d*) A single-pass fillet weld shall be deposited on one side of the joint using the types of current (reverse polarity if dc) prescribed in Table III. When welding in the vertical position is specified, the progression shall be upward. The first electrode used shall be consumed for its full length except for a stub end of not more than 2 in. Additional electrodes, if necessary, shall then be used to complete the weld for the full length of the joint, consuming each electrode completely as stated above—insofar as permitted by the length of the assembly.

(*e*) After completing the weld on the first side of the joint, the assembly shall be cooled to room temperature (but not less than 60 F) by any convenient means (Note) before commencing to weld on the second side.

NOTE.—If water is used as the coolant, care should be taken to ascertain that it has been thoroughly removed from the joint.

(*f*) The fillet weld shall be deposited on the second side of the joint by the same procedure as was the first weld.

(*g*) At a point approximately 1 in. back from the crater end of the deposit made with the first electrode on the first side of the joint the specimen shall be cut. Either face may be polished and etched to permit examination.

(*h*) The polished and etched face shall be scribed as shown in Fig. 2 and the size, the leg lengths, and the convexity (of convex fillets) shall be determined to the nearest 1/64 in. by actual measurement.

APPENDIX

GUIDE TO THE AWS-ASTM CLASSIFICATION OF CORROSION-RESISTING CHROMIUM AND CHROMIUM-NICKEL STEEL COVERED WELDING ELECTRODES

PART I.—INTRODUCTION

This guide is appended to the specifications as a source of information; *it is not mandatory and does not form a part of the specifications.* The specifications are intended to provide both the manufacturer and the purchaser of chromium and chromium-nickel steel covered welding electrodes with a means of product control and a basis of acceptance through mutually-acceptable, sound, standard requirements.

This guide has been prepared as an aid to prospective users in determining the classification best suited for a particular application, with due consideration to the particular requirements for that application.

The system of classification is similar to that used in other filler metal specifications. The letter *E* at the beginning of each number indicates an electrode. The first three digits designate the classification as to its composition. (Occasionally letters follow the three digits to indicate a modification of a standard composition.) The last two digits designate the classification as to usability with respect to position of welding and type of current.

The all-weld-metal tension tests serve as a control of uniformity and quality of the electrodes for the intended applications. While this test measures the strength and ductility, these qualities are often of lesser importance than the corrosion- and heat-resisting properties; the tension test requirements, however, provide an assurance of freedom from weld metal flaws, such as check cracks and serious dendritic segregations, which, if present, may cause failure in service.

It is recognized that for certain applications supplementary tests may be required. In such cases additional tests to determine specific properties, such as corrosion-resistance, scale-resistance, or strength at elevated temperatures may be required as agreed upon between the manufacturer and the purchaser.

PART II.—CLASSIFICATION AS TO COMPOSITION

E308.—The nominal composition of the weld metal is 19 per cent chromium, 9 per cent nickel. Commercial specifications vary in the minimum alloy requirements of this alloy, and consequently the names 18-8, 19-9, and 20-10 are often associated with electrodes of this series. Electrodes of this series are most often used to weld base metal of similar composition.

E308ELC.—The composition of this filler metal is identical to E308, except for the carbon content. By providing low (0.04 max) carbon in this electrode, it is possible to obtain resistance to intergranular corrosion due to carbide precipitation without use of stabilizers, such as columbium or titanium. A carbon content of 0.04 max has been shown to be adequate in weld metal, even though it is recognized that similar base metal specifications require an 0.03 limitation. These low-carbon grades are not as strong at elevated temperature as the columbium-stabilized grades.

E309.—The nominal composition of the weld metal is 25 per cent chromium, 12 per cent nickel. The electrodes in this series are commonly used for welding similar alloys in wrought or cast form. Occasionally they are used to weld 18-8 base metals where severe corrosion conditions exist requiring higher alloy weld metal. They are also used in welding dissimilar metals, such as joining 18-8 to mild steel, welding the clad side of 18-8 clad steels, and applying sheet linings of 12 per cent chromium steels to mild steel shells.

E309Cb.—The composition of this electrode is identical to E309, excepting for the addition of columbium and a reduction in the carbon limit. The columbium provides stabilization against intergranular corrosion and also provides higher strength in elevated temperature service. The electrodes are used primarily for welding type 347 clad steels or for welding dissimilar metals, such as columbium-stabilized 18-8 stainless steel to mild steel.

E309Mo.—The composition of this electrode is identical to E309, except for the addition of molybdenum and a reduction in the carbon limit. This electrode is used primarily for welding type 316 clad steels or for welding dissimilar metals, such as molybdenum-containing austenitic stainless steel to carbon steels.

E310.—The nominal composition of the weld metal is 25 per cent chromium and 20 per cent nickel. These electrodes were originally designed to weld alloys of similar composition. One of their chief uses has been the welding of hardenable steels, such as armor plate, where the high strength and ductility of the weld metal are useful properties in resisting ballistic impact. They are also used to a considerable extent in dissimilar metal welding involving steels of high hardenability. They are also used in the welding of clad steels.

E310Cb.—These electrodes are identical in composition to E310, excepting for the inclusion of columbium and the lower limit of carbon. They are used primarily for welding type 347 clad steels or for welding dissimilar metals, such as columbium-bearing steels to carbon steels.

E310Mo.—These electrodes are identical in composition to E310, excepting for the inclusion of molybdenum and the lower limit of carbon. They are used primarily for welding type 316 clad steels or for welding dissimilar metals, such as molybdenum-bearing stainless steels to carbon steels.

E312.—The nominal composition of the weld metal is 29 per cent chromium, 9 per cent nickel. These electrodes were originally designed to weld cast alloys of similar composition. More recently these have been found valuable in welding dissimilar metal compositions, of which one component is high in nickel. This alloy gives a two-phase weld deposit with substantial percentages of ferrite in an austenite matrix. Even with considerable dilution by austenite-forming elements, such as nickel, the microstructure remains two-phase and thus highly resistant to weld metal cracks and fissures.

E316.—The nominal composition of the weld metal is 18 per cent chromium, 12 per cent nickel, 2 per cent molybdenum. Commercial specifications vary in the minimum alloy requirements and consequently the name 18-8Mo is often associated with these electrodes. The electrodes are usually used for welding similar alloys containing 2 to 3 per cent molybdenum. They have also been found valuable for certain high temperature service applications. The presence of molybdenum provides creep resistance at elevated temperatures.

E316ELC.—The composition of these electrodes is identical to E316, except for the carbon content. By specifying low (0.04 max) carbon in this electrode it is possible to obtain resistance to intergranular corrosion due to carbide precipitation without the use of stabilizers such as columbium or titanium. These electrodes are used principally for welding extra-low carbon, molybdenum-bearing austenitic alloys, whose usual specification for carbon is 0.03 max. Tests have shown that 0.04 carbon limit in the weld metal gives ample protection against intergranular corrosion.

E317.—The alloy content of these electrodes is somewhat higher than the E316 electrodes, particularly in molybdenum. They are usually used for welding alloys of similar composition. The use of these alloys is usually limited to severe corrosion applications, involving sulfuric and sulfurous acids and their salts.

E318.—The composition of this electrode is identical to E316, excepting for the addition of columbium. Columbium provides stabilization against intergranular corrosion due to carbide precipitation. These electrodes are used primarily for welding base metals of similar composition.

E330.—The nominal composition of these electrodes is 35 per cent nickel, 15 per cent chromium. Since nickel is the predominant element, these electrodes are commonly used for heat- and scale-resisting properties above 1800 F. Repairs of defects in alloy castings and the welding of castings and wrought alloys of similar composition are the most common applications.

E347.—The nominal composition of the weld metal is 19 per cent chromium, 9 per cent nickel, with columbium added as a stabilizer. Commercial specifications vary in the minimum alloy requirements, and consequently the names 18-8Cb and 19-9Cb are often associated with electrodes of this series. The alloy is also referred to as a stabilized 18-8 or 19-9 alloy indicating that it is not subject to intergranular corrosion resulting from carbide precipitation.

These electrodes are usually used for welding chromium-nickel alloys of similar composition stabilized either with columbium or titanium. Electrodes depositing titanium as a stabilizing element are not commercially available because titanium is not readily recovered in the weld metal. Although columbium is the stabilizing element usually specified in type 347 alloys, it should be recognized that tantalum is also present sometimes in amounts up to one-half of the total of columbium plus tantalum. Tantalum and columbium are almost equally active in stabilizing carbon and in providing high temperature strength. These specifications recognize the usual commercial practice of recording columbium as the sum of columbium plus tantalum.

When the use of the electrodes is such that the minimum ferrite content of the weld metal structure must be controlled, the additional requirement with respect to chromium as a function of nickel content may be applied (see Footnote *b* of Table II). Some applications, however, especially those involving high temperature service, are adversely affected by too high a ferrite content and consequently this added requirement should not be specified unless tests prove it to be absolutely necessary.

E410.—This 12 per cent chromium alloy is an air-hardening steel and therefore requires preheat and postheat treatments in order to achieve welds of adequate ductility for most engineering purposes. The most common application of these electrodes is for welding alloys of similar compositions. They are also used for depositing overlays on carbon steels for corrosion-, erosion-, or abrasion-resistance, such as occurs in valve seats and other valve parts.

E430.—Electrodes in this classification generally contain between 15 and 17 per cent chromium. The composition is balanced by providing sufficient chromium to give adequate corrosion resistance for the usual applications and yet retain sufficient ductility in the heat-treated condition to meet the mechanical requirements of the specifications. (Excessive chromium will result in lowered ductility.)

Welding with E430 electrodes usually requires preheating before welding and a postheat treatment after welding. Optimum physical properties and corrosion resistance are obtained only when the weldment is heat treated following the welding operation.

E502.—Electrodes in this classification contain 4 to 6 per cent chromium and about 0.50 per cent molybdenum and are used for welding base metals of similar composition, usually in the form of pipe or tubing. The alloy is an air-hardening material, and therefore, when welding with E502 electrodes, preheating and postheat treatment are strongly recommended.

PART III.—CLASSIFICATION AS TO USABILITY

Only two usability classifications are provided in these specifications, depending on the type of current with which the electrodes are usable. Both types of classification are considered all-position electrodes; that is, electrodes up to and including $\frac{5}{8}$ in. in size are considered usable in all positions, whereas those $\frac{3}{16}$ in. and larger are recommended only for the flat and horizontal-fillet positions.

The type of covering as applied to a core wire to make a metal-arc welding electrode determines the usability characteristics of the electrode. The following discussion of covering types is based upon terminology commonly used by the industry but no attempt has been made to define the types as to composition.

Usability Designation—15.—The covering usually applied to these electrodes is referred to as a *lime* type which indicates that the covering contains a large proportion of calcium or other alkaline earth minerals. The electrodes are usable with direct current, reverse polarity only, and while use with alternating current is sometimes accomplished, they are not intended to qualify for use with this type of current.

Usability Designation—16.—This designation applies to electrodes for both direct and alternating current. The electrodes may have either a *lime* type covering, similar to the −15, or a *titania* type covering, indicating a large proportion of titanium-bearing minerals. The covering for these electrodes generally contains readily ionizing elements, such as potassium, in order to stabilize the arc for alternating current welding.

PART IV.—SPECIAL TESTS OF ELECTRODES

Although welds from electrodes covered by these specifications are commonly used in corrosion- or heat-resisting applications, it is not practical to require tests for corrosion or scale resistance on welds or weld metal specimens. Such special tests which are pertinent to the intended application may be conducted as agreed upon between the manufacturer and the purchaser. This section is included for the guidance of those who desire to specify special tests.

Corrosion or Scaling Tests.—Tests of joint specimens have the advantage that the joint design and welding sequence can be made identical to that being used in fabrication. They have the disadvantage of being a test of the combined properties of the weld metal, the heat affected zone of the base metal, and the unaffected base metal. Furthermore, it is difficult to obtain reproducible data if a difference exists between the corrosion or oxidation rates of the various metal structures (weld metal, heat affected zone, and unaffected base metal). Test samples cannot be readily standardized if welding sequence and joint design are to be considered a variable. Joint specimens for corrosion tests should not be used for qualifying the electrode, but may be used for qualifying welding procedures using approved materials.

All-weld-metal specimens for testing corrosion or scale resistance are prepared by following the procedure outlined for the preparation of pads for chemical analysis (see Section 18). The pad size should be at least $\frac{3}{4}$ in. in height by 2 $\frac{1}{2}$ in. in width by $(1 + \frac{5}{8}\ n)$ in. in length, where n represents the number of specimens required from the pad. The temperature of the pad between passes must be held within the range of temperatures specified in Section 19(*c*) by cooling in water or air as required. Specimens measuring $\frac{1}{4}$ by $\frac{1}{2}$ by 2 in. are machined from the top surface of the pad in such a way that the 2-in. dimension of the specimen is parallel to the 2 $\frac{1}{2}$ in. width dimension of the pad and the $\frac{1}{2}$ in. dimension is parallel to the length of the pad.

The heat treatments, surface finish, and marking of the specimens prior to testing should be in accordance with standard practices for tests of similar alloys in the wrought or cast forms. The testing procedure should correspond to the Recommended Practice for Conducting Plant Corrosion Tests (ASTM Designation: A 224), or the Recommended Practice for Boiling Nitric Acid Test for Corrosion-Resisting Steels (ASTM Designation: A 262).

Tests for Mechanical Properties.—Tests of joint specimens may be desired when the intended application involves the welding of dissimilar metals. Procedures for the mechanical testing of such joints should be in accordance with the "Standard Methods of Mechanical Testing of Welds" of the American Welding Society.

Tests of joint specimens may be influenced by the properties of the base metal and welding procedures and may not provide adequate tests of the weld metal. Such tests should be considered as tests for qualifying welding procedures using approved materials rather than for qualifying the electrodes.

Where fabrication codes require tests of welds in heat-treated conditions other than that specified in Table IV, all-weld-metal tests of heat-treated specimens may be desired. For the preparation of such specimens the procedures outlined in Section 19 should be followed.

SPECIFICATION FOR HIGH TENSILE STRENGTH CARBON-MANGANESE-SILICON STEEL PLATES FOR BOILERS AND OTHER PRESSURE VESSELS

SA-299

(IDENTICAL WITH ASTM SPECIFICATION A 299-56)

Scope

1. This specification covers carbon-manganese-silicon steel plates up to 2 in., inclusive, in thickness, of flange and firebox quality, for use in boilers and other pressure vessels. This material is intended for fusion welding. Definite silicon and manganese contents are specified in order to limit the carbon to the lowest practical amount consistent with the specified tensile strength and the thickness of the material. Welding technique is of fundamental importance and it is presupposed that welding procedure will be in accordance with approved methods, for this class of material.

General Conditions for Delivery

2. Material furnished under this specification shall conform to the applicable requirements of the current edition of the Tentative Specification for General Requirements for Delivery of Rolled Steel Plates of Flange and Firebox Qualities (ASTM Designation: A 20).

Process

3. The steel shall be made by either or both of the following processes: open-hearth or electric-furnace.

Heat Treatment

4. (*a*) Unless otherwise specified on the purchase order, the plates will be tested and supplied in the as-rolled condition.

(*b*) The fabricator may specify that the plates shall be uniformly heat treated at the mill to produce grain refinement or to relieve stresses. Specified heat treatments may be stress relieving, normalizing or normalizing and stress relieving. If heat treatment temperatures are not indicated on the purchase order, the plate manufacturer shall heat treat the plates under conditions considered appropriate and shall inform the fabricator the procedure followed.

(*c*) When the fabricator elects to heat treat the plates during the course of fabrication, he may specify that the plate manufacturer conduct the testing on specimens heat treated in accordance with the indicated order requirements.

Chemical Composition

5. The steel shall conform to the requirements as to chemical composition prescribed in Table I.

Tensile Properties

6. (*a*) The material as represented by the tension test specimens shall conform to the requirements as to tensile properties prescribed in Table II.

(*b*) Tensile strength only need be determined on the tension test specimen taken from the top of firebox plates, and it shall not exceed 92,000 psi.

(*c*) For material under $\frac{5}{16}$ in. in thickness, a deduction from the percentage of elongation in 8 in. specified in Table II of 1.25 per cent shall be made for each decrease of $\frac{1}{32}$ in. of the specified thickness below $\frac{5}{16}$ in.

(*d*) For material over $\frac{3}{4}$ in. in thickness, a deduction from the percentage of elongation in 8 in. specified in Table II of 0.5 per cent shall be made for each increase of $\frac{1}{8}$ in. of the specified thickness above $\frac{3}{4}$ in. This deduction shall not exceed 3 per cent.

TABLE I.-CHEMICAL REQUIREMENTS.

Carbon, max., per cent:	
For plates 1 in. and under in thickness	0.28
For plates over 1 to 2 in., incl., in thickness	0.31
Manganese, per cent:	
Ladle analysis	0.90 to 1.40
Check analysis	0.86 to 1.45
Phosphorus, max., per cent:	
Flange	0.040
Firebox	0.035
Sulfur, max., per cent:	
Flange	0.05
Firebox	0.04
Silicon, per cent:	
Ladle analysis	0.15 to 0.30
Check analysis	0.13 to 0.33

Bending Properties

7. The bend test specimens shall stand being bent cold (room temperature) through 180 deg. without cracking on the outside of the bent portion to an inside diameter which shall have the following relation to the thickness of the specimen. When the test is made on a specimen reduced in thickness, the rolled surface shall be on the outer curve of the bend.

Thickness of Material, in.	Ratio of Bend Diameter to Thickness of Specimen
1 and under	3
Over 1 to 1½, incl	3
Over 1½ to 2, incl	4

TABLE II.—TENSILE REQUIREMENTS.

	For Plates 1 in. and Under in Thickness	For Plates Over 1 to 2 in., incl, in Thickness
Tensile strength, psi	75 000 to 90 000	75 000 to 90 000
Yield point, min, psi	42 000	40 000
Elongation in 8 in., min, per cent:		
Flange	17[a]	17[a]
Firebox	18[a]	18[a]
Elongation in 2 in., min, per cent:		
Flange	....	20
Firebox	....	21

[a] See Section 6(*c*) and (*d*).

Test Specimens

8. (*a*) Test specimens shall be prepared for testing from material in its rolled condition.

(*b*) When so specified on the purchase order with the mill, test specimens representing the plates shall be stress-relieved by gradually and uniformly heating them to a temperature between 1100 and 1200 F. (or a temperature range otherwise agreed upon between the manufacturer and the fabricator), holding at temperature for at least 1 hr. per inch of thickness and cooling in still atmosphere to a temperature not exceeding 600 F.

NOTE.—The term "plate as rolled" used here refers to the unit plate rolled from a slab or directly from an ingot in its relation to the location and number of specimens; not to its condition.

Number of Tests

9. Two tension tests, one bend test and one homogeneity test shall be made from each firebox steel plate as rolled. One tension test and one bend test shall be made from each flange steel plate as rolled.

SPECIFICATION FOR STEEL PLATES FOR PRESSURE VESSELS FOR SERVICE AT LOW TEMPERATURES

SA-300

(IDENTICAL WITH ASTM SPECIFICATION A 300-58)

Scope

1. This specification covers steel plates for use in welded pressure vessels that are to operate at low temperatures. The classes of plates covered by this specification shall conform to all requirements of the ASTM specifications for the particular grade referred to in Table I in addition to the requirements of this specification (See Note 2 in Section 2). It is desired that the steel supplied under this specification be made to fine grain melting practice.

NOTE 1.—It should be recognized that fabricating processes, such as forming and welding, may affect the impact properties of steel so that the impact properties of the plate in a fabricated pressure vessel may differ from the impact properties of the plate as tested.

Heat Treatment (Note 2)

2. (*a*) Plates shall be furnished in the heat-treated condition unless otherwise specified on the order.

(*b*) Plates shall be uniformly heat treated. Heat treatment shall consist of normalizing.

(*c*) When a fabricator, who is equipped to perform properly the work, elects to do the required heat treatment, he shall so indicate in his orders to the mill, and he shall accept the plates on the basis of mill tests. In this case the plate manufacturer shall make the tests prescribed in this specification, the test specimens to be heat treated under conditions agreed upon to meet the test requirements. Samples for heat treatment shall consist of the full thickness of the plate with the two other dimensions at least three times the thickness, but in no case less than 2 in. The plate manufacturer shall furnish the details of heat treatment of the test pieces to the fabricator for guidance in heat treating the plates.

NOTE 2.—This section supersedes the heat treatment clauses of the respective material specifications referred to in Table I.

Impact Properties

3. (*a*) The notched bar impact properties of the material, described in Paragraph (*b*), shall not be less than 15 ft-lb when tested at the specified temperature. Unless otherwise agreed upon, tests will be conducted at a temperature at least as low as the minimum temperature listed in Table I for the respective classes.

(*b*) Each impact test value shall constitute the average value of three specimens taken from each plate as rolled (Note 3) with not more than one value below the specified minimum value of 15 ft-lb, but in no case below 10 ft-lb.

NOTE 3.—The term "plate as rolled," used here and in Section 4(*b*), refers to the unit plate from a slab or rolled directly from an ingot in its relation to the location and number of specimens; not to its condition. If the plate is sheared or otherwise cut into smaller sizes after rolling, the impact test made from the original plate shall govern.

(*c*) If the value for more than one specimen is below 15 ft-lb, or if the value for one specimen is below 10 ft-lb, a retest of three additional specimens shall be made, each of which must equal or exceed the specified minimum value of 15 ft-lb. Such a retest shall be permitted only when the average value of the three specimens equals or exceeds 10 ft-lb. If the required values are not obtained upon retest or if the values on the initial test are below the minimum required for retest, the plate may be reheat treated. After reheat treatment, a set of three specimens shall be made, each of which must equal or exceed the specified minimum value of 15 ft-lb.

(*d*) For plate which is not of sufficient thickness to permit the preparation of full size impact specimens, tests may be made on the largest of the subsize specimens listed in Table II which can be prepared from the plate. The impact values obtained on subsize specimens shall not be less than the values listed in Table II.

TABLE I.—STEEL PLATES FOR USE AT LOW TEMPERATURES.

Class	ASTM Specification and Grades[a]	Minimum Test Temperature, deg Fahr
1	A 201, A 212 flange or firebox quality	−50
2	A 203, grades A and B, firebox quality	−75
3	A 203, grades D and E, firebox quality	−150
4	A 353, firebox quality	−320
5	A 410, firebox quality	−150

[a] These designations refer to the latest issue of the following specifications of the American Society for Testing Materials:
A 201, Specification for Carbon-Silicon Steel Plates of Intermediate Tensile Ranges for Fusion-Welded Boilers and Other Pressure Vessels,
A 212, Specification for High Tensile Strength Carbon-Silicon Steel Plates for Boilers and Other Pressure Vessels,
A 203, Specification for Nickel-Steel Plates for Boilers and Other Pressure Vessels,
A 353, Specification for Low-Carbon, High-Nickel Steel Plate for Pressure Vessels, and
A 410, Specification for Chromium-Copper-Nickel-Aluminum Alloy Steel Plates for Pressure Vessels.

Impact Test Specimens

4. (*a*) The impact test specimen shall be of the Charpy type, keyhole (or milled

TABLE II.—CHARPY IMPACT REQUIREMENTS FOR SUBSIZE SPECIMENS.

Size of Specimen, mm	Minimum Impact Value Requirement, Average of Three Specimens, ft-lb	Minimum Impact Value Permitted on One Specimen, ft-lb
10 by 7.5	12.5	8.5
10 by 5	10.0	7.0

"U") notch, and shall conform in all respects with the specimens shown in Figs. 12 and 13 of the Methods and Definitions for the Mechanical Testing of Steel Products (ASTM Designation: A 370). The long dimension of the specimen shall be parallel to the final direction of rolling (longitudinal test), or transverse to the final direction of rolling (transverse test), or specimens may be taken in both directions (longitudinal and transverse tests). The base of the notch shall be perpendicular (normal) to the plate surface. On material of thickness greater than ½ in. the specimen shall be taken from a location as near as practicable to a point midway between the plate surface and the center of thickness.

(*b*) The location of impact specimens in which the long dimension is parallel to the final direction of rolling shall be adjacent to the bottom tension test piece. Impact specimens whose long dimension is transverse to the final direction of rolling shall be taken from the top of the plate as rolled (Note, Section 3(*b*)) midway between the center and the edge.

(*c*) Unless otherwise specified, impact tests will be made on specimens whose long dimension is parallel to the final direction of rolling.

(*d*) When the heat treatment specified in Section 2(*b*) is performed by the plate manufacturer, test specimens shall be heat treated with the parent plate. If the purchase order bears the notation "stress relieve specimens," the test pieces shall receive a subsequent stress relieving treatment at 1100 to 1200 F, prior to preparation of the impact specimens, except for class 4 which shall be stress relieved at a temperature of 1025 to 1085 F.

Method of Impact Testing

5. (*a*) The impact test shall be made in accordance with the simple beam, Charpy type of test described in Section 13 of Methods A 370.

(*b*) The following precautions should be observed during testing. The test piece, as well as the handling tongs, shall be cooled for the sufficient length of time to reach the test temperature. The test temperature shall be maintained within a range of ±3 F. The specimen shall be quickly transferred from the cooling device to the anvil of the testing machine and broken within a time lapse of not more than 5 sec.

Marking

6. In addition to the requirements for marking covered by the ASTM specification for the particular grade of plate referred to in Table I, the letters "LT" shall be stamped on each plate following the class number, grade, etc.

(*b*) If the impact test is conducted at temperatures other than those shown in Table I, the letters "LT" shall be followed by the test temperature (example: LT 125, LT 200).

SPECIFICATION FOR MANGANESE-MOLYBDENUM STEEL PLATES FOR BOILERS AND OTHER PRESSURE VESSELS

SA-302

(IDENTICAL WITH ASTM SPECIFICATION A 302-56)

Scope

1. This specification covers manganese-molybdenum steel plates, in two high tensile strength ranges, designated grades A and B, for use in boilers and other pressure vessels. The maximum thickness of plates ordered under this specification shall be limited in thickness as follows: 2 in. maximum for flange quality plate, and 4 in. maximum for firebox quality. Welding technique is of fundamental importance and it is presupposed that welding procedure shall be in accordance with approved methods for this class of material.

General Requirements for Delivery

2. Material furnished under this specification shall conform to the applicable requirements of the current edition of the Specification for General Requirements for Delivery of Rolled Steel Plates of Flange and Firebox Qualities (ASTM Designation: A 20).

Process

3. The steel shall be made by either or both of the following processes: open-hearth or electric-furnace.

Heat Treatment

4. (*a*) Plates over 2 in. in thickness shall be treated to produce grain refinement either by normalizing or heating uniformly for hot forming. If the required treatment is to be obtained in conjunction with the hot forming operation, the temperature to which the plates are heated for hot forming shall be equivalent to and shall not significantly exceed the normalizing temperature. If the treatment of the plates is not specified to be done at the plate manufacturer's plant, the testing shall be carried out in accordance with Paragraph (*b*).

(*b*) When a fabricator is equipped and elects to perform the required normalizing or fabricates by hot forming as provided in Paragraph (*a*), the plates shall be accepted on the basis of mill tests made on specimens heat treated in accordance with the purchaser's order requirements. If the heat treatment temperatures are not indicated on the purchase order, the plate manufacturer shall heat treat the specimens under conditions he considers appropriate for grain refinement, and to meet the test requirements. The plate manufacturer shall inform the fabricator of the procedure followed in treating the specimens at the mill.

(*c*) The purchaser shall indicate in his orders to the plate manufacturer whether the rolling mill or the fabricator shall perform the required treatment of the plates.

(*d*) When the plates are to be normalized at the plate manufacturer's plant, the mechanical properties shall be determined on specimens simultaneously treated with the plates.

(*e*) Plates 2 in. and under in thickness will be tested and supplied in the as-rolled condition except, when agreed upon between the manufacturer and the purchaser, plates 2 in. and under may be furnished stress relieved, normalized, or normalized and stress relieved.

Chemical Composition

5. The steel shall conform to the requirements as to chemical composition prescribed in Table I.

TABLE I.—CHEMICAL REQUIREMENTS.

	Grade A	Grade B
Carbon, max., per cent:		
For plates 1 in. and under in thickness	0.20	0.20
For plates over 1 to 2 in., incl., in thickness	0.23	0.23
For plates over 2 to 4 in., incl., in thickness	0.25	0.25
Manganese, per cent:		
Ladle analysis	0.95 to 1.30	1.15 to 1.50
Check analysis	0.90 to 1.35	1.10 to 1.55
Phosphorus, max., per cent:		
Flange	0.040	0.040
Firebox	0.035	0.035
Sulfur, max., per cent:		
Flange	0.050	0.050
Firebox	0.040	0.040
Silicon, per cent:		
Ladle analysis	0.15 to 0.30	0.15 to 0.30
Check analysis	0.13 to 0.32	0.13 to 0.32
Molybdenum, per cent:		
Ladle analysis	0.45 to 0.60	0.45 to 0.60
Check analysis	0.41 to 0.64	0.41 to 0.64

Tensile Properties

6. (*a*) The material as represented by tension test specimens shall conform to the requirements as to tensile properties prescribed in Table II.

TABLE II.—TENSILE REQUIREMENTS.

	Grade A	Grade B
Tensile strength, psi	75 000 to 95 000	80 000 to 100 000
Yield point, min, psi	45 000	50 000
Elongation in 8 in., min, per cent:		
Flange	17[a]	16[a]
Firebox	17[a]	17[a]
Elongation in 2 in., min, per cent:		
Flange	20	19
Firebox	21[b]	20[b]

[a] See Section 6 (*c*), (*d*), and (*e*).
[b] See Section 6 (*f*).

(*b*) Tensile strength only need be determined on the tension test specimen taken from the top of firebox plates, and it shall not exceed 98,000 psi. for grade A, and 103,000 psi. for grade B.

(*c*) For material under $\frac{5}{16}$ in. in thickness, a deduction from the percentage of elongation in 8 in. specified in Table II of 1.25 per cent shall be made for each decrease of $\frac{1}{32}$ in. of the specified thickness below $\frac{5}{16}$ in.

(*d*) For plates over $\frac{1}{4}$ to $\frac{3}{4}$ in., inclusive, in thickness, if the percentage of elongation of an 8-in. gage length test specimen falls not more than 3 per cent below the amount prescribed in Table II, the elongation in 2 in. across the break shall be not less than 25 per cent.

NOTE.—A characteristic of certain types of alloy steels is a local disproportionate increase in the degree of necking down or contraction of the specimens under tension test; resulting in a decrease in the percentage of elongation as the gage length is increased. The effect is not so pronounced in the thicker plates.

(*e*) For material over $\frac{3}{4}$ in. in thickness, a deduction from the percentage of elongation in 8 in. specified in Table II of 0.5 per cent shall be made for each increase of $\frac{1}{8}$ in. of the specified thickness above $\frac{3}{4}$ in. This deduction shall not exceed 3 per cent.

(*f*) For material over $3\frac{1}{2}$ in. in thickness, a deduction from the percentage of elongation in 2 in. specified in Table II of 0.5 per cent shall be made for each increase of $\frac{1}{2}$ in. of the specified thickness above $3\frac{1}{2}$ in. This deduction shall not exceed 3 per cent.

TABLE III.—BEND DIAMETERS.

Thickness of Material, in.	Ratio of Bend Diameter to Thickness of Specimen	
	Grade A	Grade B
1 and under	2	$2\frac{1}{2}$
Over 1 to 2, incl.	$2\frac{1}{2}$	3
Over 2 to 4, incl.	3	$3\frac{1}{2}$

Bending Properties

7. The bend test specimen shall stand being bent cold (room temperature) through 180 deg. without cracking on the outside of the bent portion to an inside diameter which shall have the relation to the thickness of the specimen prescribed in Table III. When the test is made on a specimen reduced in thickness, the rolled surface shall be on the outer curve of the bend.

Test Specimens

8. (*a*) For plates 2 in. and under in thickness the test specimens shall be prepared for testing from the material in its rolled condition, or as otherwise specified.

(*b*) For plates over 2 in. in thickness the test specimens shall be prepared from the material in its heat-treated condition, or from full thickness samples similarly and simultaneously treated except as permitted in Section 4.

(*c*) When so specified on the purchase order with the mill, test specimens representing the plates shall be stress-relieved by gradually and uniformly heating them to a temperature between 1100 and 1200 F. (or a temperature range otherwise agreed upon between the manufacturer and the fabricator) holding at temperature for at least 1 hr. per inch of thickness and cooling in still atmosphere to a temperature not exceeding 600 F.

Number of Tests

9. Two tension tests, one bend test and one homogeneity test shall be made from each firebox steel plate as rolled. One tension test and one bend test shall be made from each flange steel plate as rolled.

NOTE.—The term "plate as rolled" used here refers to the unit plate rolled from a slab or directly from an ingot in its relation to the location and number of specimens, not to its condition.

Marking

10. As provided in ASTM Specification A 20, each plate shall be legibly stamped or stenciled depending on ordered thickness with the letters "MN-MO" in addition to the regular markings.

SPECIFICATION FOR CARBON-STEEL BARS SUBJECT TO MECHANICAL PROPERTY REQUIREMENTS

SA-306

(IDENTICAL WITH ASTM SPECIFICATION A 306-60T EXCEPT THAT THE REFERENCES TO BESSEMER STEEL AND GRADES 75 AND 80 HAVE BEEN DELETED AND A LIMIT ON CARBON CONTENT FOR ALL GRADES HAS BEEN ADDED)

Scope

1. This specification covers carbon steel bars furnished in the as rolled condition, subject to mechanical property requirements and intended for general constructional applications.

General Requirements

2. Material furnished under this specification shall conform to the requirements of the current edition of the Specification for General Requirements for Hot-Rolled and Cold-Finished Carbon and Alloy Steel Bars (ASTM Designation: A 29) unless otherwise provided herein.

Basis of Purchase

3. Orders under this specification shall include the following as required to adequately describe the desired material:

(*1*) Quantity (weight or number of pieces),
(*2*) Name of material (carbon steel bars),
(*3*) Cross-sectional shape,
(*4*) Size,
(*5*) Length,
(*6*) Bend test, if required (Section 10 (*b*)),
(*7*) Grade designation or corresponding tensile limits (Section 6 (*a*)),
(*8*) Special straightness, if required,
(*9*) ASTM designation (A 306), and
(*10*) End use, exceptions to the specification or special requirements.

Process

4. The steel shall be made by either the open-hearth or electric-furnace process.

Ladle Analysis

5. (*a*) The steel shall conform on ladle analysis to the following requirements:

Phosphorus, max, per cent:	
Open-hearth and electric-furnace	0.040
Sulfur, max, per cent:	
Open-hearth and electric-furnace	0.050
Copper, when copper steel is specified, min, per cent	0.20
Carbon, Max, per cent	0.35

(*b*) When tension tests are waived in accordance with Section 6 (*c*), chemistry consistent with the mechanical properties desired shall be applied.

TABLE I.—TENSILE PROPERTIES.

Grade Designation	Tensile Strength, psi	Yield Point, min, psi	Elongation, min, per cent	
			8-in. Gage Length	2-in. Gage Length
45	45 000 to 55 000	22 500	27	33
50	50 000 to 60 000	25 000	25	30
55	55 000 to 65 000	27 500	23	26
60	60 000 to 72 000	30 000	21	22
65	65 000 to 77 000	32 500	17	20
70	70 000 to 85 000	35 000	14	18

Tensile Properties

6. (*a*) The material shall conform to the applicable requirements as to tensile properties prescribed in Table I.

(*b*) The yield point shall be determined by the drop of the beam or halt in the gage of the testing machine, or by the use of dividers.

(*c*) Shapes less than 1 sq in. in cross-section and bars (other than flats) less than $\frac{1}{2}$ in. in thickness or diameter need not be subjected to tension tests by the manufacturer.

(*d*) For material over $\frac{3}{4}$ in. in thickness or diameter, a deduction from the percentage of elongation in 8 in. specified in Table I of 0.25 per cent shall be made for each increase of $\frac{1}{32}$ in. in the specified thickness or diameter above $\frac{3}{4}$ in.

(*e*) For material under $\frac{5}{16}$ in. in thickness or diameter, a deduction from the percentage of elongation in 8 in. specified in Table I of 2.00 per cent shall be made for each decrease of $\frac{1}{32}$ in. in the specified thickness or diameter below $\frac{5}{16}$ in.

(*f*) For grades 45, 50, 55, 60, and 65, for material over 2 in. in thickness or diameter, a deduction from the percentage of elongation in 2 in. specified in Table I of 1.00 per cent shall be made for each 1 in. of specified thickness or diameter or fraction thereof over 2 in. in thickness or diameter.

TABLE II.—BEND REQUIREMENTS.

Grade Designation	Ratio of Bend Diameter to Thickness of Specimen for Thickness in Diameter of Bar, in.						
	$\frac{3}{4}$ and under	Over $\frac{3}{4}$ to 1, incl	Over 1 to $1\frac{1}{2}$, incl	Over $1\frac{1}{2}$ to 2, incl	Over 2 to 3, incl	Over 3 to 5, incl	Over 5
45	flat	flat	$\frac{1}{2}$	1	1	2	3
50	flat	$\frac{1}{2}$	1	$1\frac{1}{2}$	$2\frac{1}{2}$	3	$3\frac{1}{2}$
55	$\frac{1}{2}$	1	$1\frac{1}{2}$	2	$2\frac{1}{2}$	3	$3\frac{1}{2}$
60	$\frac{1}{2}$	1	$1\frac{1}{2}$	$2\frac{1}{2}$	3	$3\frac{1}{2}$	4
65	1	$1\frac{1}{2}$	2	3	$3\frac{1}{2}$	4	5
70	$1\frac{1}{2}$	2	$2\frac{1}{2}$	3	$3\frac{1}{2}$	4	5

(*g*) For grade 70, for material over 2 in. in thickness or diameter, a deduction from the percentage of elongation in 2 in. specified in Table I of 1.00 per

cent shall be made for each 1 in. of specified thickness or diameter, or fraction thereof, over 2 in. in diameter, or fraction thereof, over 2 in. in diameter or thickness, to a maximum deduction of 3 per cent.

Bending Properties

7. The bend test specimen shall stand being bent cold through 180 deg without cracking on the outside of the bent portion, to an inside diameter which shall have the relation to the thickness or diameter of the specimen given in Table II.

Tension Test Specimens

8. (*a*) Test specimens shall be prepared for testing from the material in its as-rolled condition. However the tensile specimen may be aged as described in the Methods and Definitions for Mechanical Tests of Steel Products (ASTM Designation: A 370).

(*b*) Tension test specimens shall be taken longitudinally and may be tested in full thickness or section, or they may be machined to the dimensions shown in Figs. 4 or 6 of ASTM Methods A 370. If test specimens are selected conforming to the dimensions of Fig. 6 they shall be machined from a position midway between the center and the surface of the bar.

(*c*) Tension test specimens for shapes and flats may be machined to the form and dimensions shown in Fig. 4 of ASTM Methods A 370, or with both edges parallel. Test specimens for material over 1½ in. in thickness or diameter may be machined to a thickness or diameter of at least ¾ in. for a length of at least 9 in., or they may conform to the dimensions shown in Fig. 6 of ASTM Methods A 370.

Bend Test Specimens

9. (*a*) Bend test specimens for material 1½ in. and under in diameter or thickness may be the full thickness of the section. For flat bars over 2 in. in width the width may be reduced by milling to 1½ in.

(*b*) Bend test specimens for material over 1½ in. in diameter or thickness may be machined to a thickness or diameter of at least ¾ in., or to 1 by ½ in. in section. Machined sides of bend test specimens may have the corners rounded to a radius of not over 1/16 in. for material 2 in. and under in thickness, and not over ⅛ in. for material over 2 in. in thickness.

Number of Tests

10. (*a*) Two tension tests shall be made from each heat, unless the finished material from a heat is less than 30 tons when one tension test will be sufficient. If, however, material from one heat differs ⅜ in. or more in thickness, one tension test shall be made from both the thickest and the thinnest material (larger than the sizes enumerated in Section 6(*c*)), regardless of weight represented.

(*b*) Shapes less than 1 sq in. in cross-section and bars, (other than flats) less than ½ in. in thickness or diameter shall be subject to bend tests. All other finished material shall be subject to bend tests only when specified by the purchaser. When subject to bend test, two bend tests shall be made from each heat unless the finished material from a heat is less than 30 tons when one bend test will be sufficient. If, however, material from one heat differs ⅜ in. or more in thickness, one bend test shall be made from the thickest and the thinnest material rolled, regardless of weight represented.

NOTE.—Bend test should be specified by the purchaser only when the material is to be bent cold during fabrication.

SPECIFICATION FOR LOW-CARBON STEEL EXTERNALLY AND INTERNALLY THREADED STANDARD FASTENERS

SA-307

(IDENTICAL WITH ASTM SPECIFICATION A 307-61T EXCEPT THAT GRADE A BOLTS AND NUTS HAVE BEEN DELETED)

Scope

1. This specification covers the chemical and mechanical requirements of one grade of low-carbon steel externally and internally threaded standard fasteners, 4 in. and under in diameter, frequently used for the following applications:

Grade B Bolts, for flanged joints in piping systems where one or both flanges are cast iron.

Materials and Manufacture

2. (*a*) Steel for bolts shall be made by the open hearth or electric furnace process.

(*b*) Steel for nuts shall be made by the open hearth, electrice furnace, or bessemer process.

(*c*) Bolts may be produced by hot or cold forging of the heads or machining from bar stock.

(*d*) Bolt threads may be rolled or cut.

(*e*) Nuts may be produced by hot pressing, cold punching, cold forging, or machining from bar stock.

Chemical Requirements

3. (*a*) Steel for bolts and nuts shall conform to the following chemical requirements:

	Bolts	Nuts
Phosphorus, max, per cent	0.04	0.12
Sulfur, max, per cent	0.05	0.15

(*b*) Resulfurized material is not subject to rejection based on check analysis for sulfur.

(*c*) Bolts and nuts are customarily furnished from stock, in which case individual heats of steel cannot be identified.

Mechanical Requirements

4. (*a*) Bolts shall meet the hardness requirements specified in Table I. This shall be the only requirement for bolts which are too short or which have insufficient threads for tension testing or which have drilled or undersize heads that are weaker than the threaded section of the bolt.

TABLE I.—HARDNESS REQUIREMENTS FOR FULL SIZE BOLTS.

Bolt Size, in.	Grade	Hardness			
		Brinell		Rockwell B	
		Min	Max	Min	Max
All	B	104	187	64	92

(*b*) Bolts, other than those excepted in Paragraph (*a*), shall be subject to a tension test as specified in Section 6. Where both hardness and tension tests are performed, acceptance on the basis of the tensile requirements shall take precedence where the minimum requirements are the subject of controversy.

(*c*) Bolts 1⅛ in. and under in diameter when tested in full size shall meet the requirements for tensile strength specified in Table II.

(*d*) Bolts 1¼ to 3 in. in diameter, inclusive, shall be tested preferably in full size and shall meet the requirements for tensile strength specified in Table II. But when equipment of sufficient capacity for such tests is not available they shall meet the following requirements for machined specimens: 55,000 psi, min, for grade B and 90,000 psi, max, for grade B. The min. elongation in 2 in. shall be 18 per cent.

(*e*) Nuts shall meet the hardness requirement specified in Table III. Hardness shall be the only requirement for jam, slotted and castellated nuts and for nuts larger than 1½ in. in size.

TABLE II.—TENSILE REQUIREMENTS FOR FULL SIZE BOLTS.

Bolt Size, in.	Threads per inch	Stress Area, sq in[a]	Tensile Strength, lb.	
			Grade B, min[b]	Grade B max[c]
¼	20	0.0318	1 750	2 850
5/16	18	0.0524	2 900	4 700
⅜	16	0.0775	4 250	7 000
7/16	14	0.1063	5 850	9 550
½	13	0.1419	7 800	12 750
9/16	12	0.182	10 000	16 400
⅝	11	0.226	12 450	20 350
¾	10	0.334	18 350	30 050
⅞	9	0.462	25 400	41 600
1	8	0.606	33 350	54 550
1⅛	7	0.763	41 950	68 650
1¼	7	0.969	53 300	87 200
1⅜	6	1.155	63 550	103 950
1½	6	1.405	77 300	126 450
1¾	5	1.90	104 500	171 000
2	4½	2.50	137 500	225 000
2¼	4½	3.25	178 800	292 500
2½	4	4.00	220 000	360 000
2¾	4	4.93	271 200	443 700
3	4	5.97	328 400	537 300
3¼	4	7.10	390 500	639 000
3½	4	8.33	458 200	749 700
3¾	4	9.66	531 300	869 400
4	4	11.08	609 400	997 200

[a] Area calculated from the formula:

$$A_s = 0.7854\left(D - \frac{0.9743}{n}\right)^2$$

where:
A_s = stress area,
D = nominal diameter of bolt, and
n = threads per inch.

[b] Based on 55 000 psi.

[c] Based on 90 000 psi.

(*f*) Nuts 1⅛ in. and under in size shall meet the proof loads specified in Table III.

(*g*) Nuts 1¼ to 1½ in., inclusive, in size shall preferably meet the requirements for proof load specified in Table III, but when equipment of sufficient capacity for such tests is not available they shall meet the hardness requirements specified in Table III.

Dimensions

5. (*a*) Unless otherwise specified, threads shall be the Coarse Thread Series as specified in the latest issue of the American Standard for Screw Threads (ASA No.: B 1.1), having a class 2A tolerance for bolts and class 2B tolerance for nuts or class 2 tolerance for both bolts and nuts, at the option of the manufacturer.

TABLE III.—HARDNESS AND PROOF LOAD REQUIREMENTS FOR NUTS.

Nut Size, in.	Threads per Inch	Proof Load, lb[a]	Brinell Hardness, min
¼	20	2 850	...
5/16	18	4 700	...
⅜	16	7 000	...
7/16	14	9 550	...
½	13	12 750	...
9/16	12	16 400	...
⅝	11	20 350	...
¾	10	30 050	...
⅞	9	41 600	...
1	8	54 550	...
1⅛	7	68 650	...
1¼	7	87 200	104
1⅜	6	103 950	104
1½	6	126 450	104
1¾ to 4, incl.			104

[a] Based on 90,000 psi for nut sizes ¼ to 2¾ in., inclusive; 77,000 psi for 3 in.; and 67,000 psi for 3¼ to 4 in., inclusive.

(*b*) Grade B bolts shall have either Regular Square Heads, or Heavy Hexagon Heads, as specified, with dimensions conforming to the latest issue of American Standard B 18.2.

(*c*) Unless otherwise specified, nuts for grade B bolts shall be the Hexagon Heavy Series, with dimensions conforming to the latest issue of the American Standard B 18.2.

Methods of Test

6. (*a*) The material shall be tested in accordance with Supplement III of the Methods and Definitions for Mechanical Testing of Steel Products, (ASTM Designation: A 370).

(*b*) Standard square and hexagon bolts only shall be tested by the wedge tension method. Fracture shall be in the body or threads of the bolt without any fracture at the junction of the head and body. Other headed bolts shall be tested by the axial tension meth od

(*c*) Nuts shall be tested by the axial proof load method.

(*d*) Speed of testing as determined with a free running crosshead shall be a maximum of 1 in. per min for the tensile strength tests of bolts and the proof load determination on nuts.

Number of Tests and Retests

7. (*a*) The requirements of this specification are requirements to be met in continuous mass production for stock during which the manufacturer has made such sample inspections as to insure normally that the material is controlled within the specified limits. Additional tests of individual shipments of material are not ordinarily contemplated.

(*b*) When additional tests are specified on the purchase order, a lot, for purposes of selecting test samples, shall consist of all material offered for inspection at one time that has the following common characteristics:

(*1*) One type of item, that is, bolts or nuts,

(*2*) One nominal size, and

(*3*) One nominal length of bolts.

(*c*) From each lot, the number of tests for each requirement shall be as follows:

Number of Pieces in Lot	Number of Samples
800 and under	1
801 to 8 000	2
8 001 to 22 000	3
Over 22 000	5

(*d*) If any test specimen shows defective machining it may be discarded and another specimen substituted.

(*e*) Should any sample fail to meet the requirements of a specified test, double the number of samples from the same lot shall be tested, in which case all of the additional samples shall meet the specification.

Marking

8. Bolt heads shall be marked (by raised or depressed mark at the option of the manufacturer) to identify the manufacturer. The manufacturer may use additional marking for his own use.

Inspection

9. (*a*) If the inspection described in Paragraph (*b*) is required by the purchaser it shall be specified in the inquiry, order, or contract.

(*b*) The inspector representing the purchaser shall have free entry, at all times while work on the contract of the purchaser is being performed, to all parts of the manufacturer's works that concern the manufacture of the material ordered. The manufacturer shall afford the inspector all reasonable facilities, without charge, to satisfy him that the material is being furnished in accordance with these specifications. All tests (except check analysis) and inspection shall be made at the place of manufacture prior to shipment, unless otherwise specified, and shall be so conducted as not to interfere unnecessarily with the operation of the works.

Rejection

10. Unless otherwise specified, any rejection based on tests specified herein shall be reported to the manufacturer within five working days from the receipt of samples by the purchaser.

SPECIFICATION FOR SEAMLESS AND WELDED AUSTENITIC STAINLESS STEEL PIPE

SA-312

(IDENTICAL WITH ASTM SPECIFICATION A 312-61T)

Scope

1. (*a*) These specifications are intended as a general guide for the purchase of austenitic steel pipe and to serve as a basis for agreement between the manufacturer and the purchaser as to details not specifically covered.

(*b*) These specifications cover seamless and welded austenitic steel pipe intended for high temperature and general corrosive service. Fifteen grades are covered.

NOTE 1.—The grades of austenitic stainless steel pipe furnished in accordance with these specifications have been found suitable for low-temperature service down to −325 F, where Charpy notched bar impact values of 15 ft-lb, minimum, are required, and need not be impact tested.

(*c*) Grades TP 304H, TP 316H, TP 321H, TP 347H, and TP 348H are modifications of grades TP 304, TP 316, TP 321, TP 347, and TP 348, and are intended for high-temperature service.

(*d*) The grade and process of manufacture, that is, whether seamless or welded, shall be specified on the purchase order.

(*e*) Optional supplementary requirements are provided for pipe where a greater degree of examination is desired. These supplementary requirements call for additional tests to be made at the expense of the purchaser and, when desired, one or more of these may be specified in the order.

Process

2. The steel shall be made by the electric-furnace process or other processes approved by the purchaser.

Manufacture

3. (*a*) The pipe shall be made by the seamless or an automatic welding process, with no addition of filler metal in the welding operation.

(*b*) At the manufacturer's option, pipe may be furnished either hot finished or cold finished.

(*c*) The pipe shall be pickled free from scale. When bright annealing is used, pickling is not necessary.

Discard

4. A sufficient discard shall be made from each ingot to secure freedom from injurious piping and undue segregation.

Heat Treatment

5. (*a*) All material shall be furnished in the heat treated condition. The heat treatment procedure, except for "H" grades, shall consist of heating the material to a minimum temperature of 1900 F and quenching in water or rapidly cooling by other means.

(*b*) All H grades shall be furnished in the solution-treated condition. If cold working is involved in processing, the minimum solution treating temperature for grades TP 321 H, TP 347 H, and TP 348 H shall be 2000 F and for grades TP 304 H and TP 316 H, 1800 F. If the H grade is hot rolled, the minimum solution treating temperatures for grades TP 321 H, TP 347 H, and TP 348 H shall be 1925 F, and for grades TP 304 H and TP 316 H, 1800 F.

Chemical Composition

6. The steel shall conform to the requirements as to chemical composition prescribed in Table I.

Ladle Analysis

7. An analysis of each heat of steel shall be made by the steel manufacturer to determine the percentages of the elements specified in Section 6. The chemical composition thus determined, or that determined from a check analysis made by the pipe manufacturer, if the latter has not manufactured the steel, shall be reported to the purchaser or his representative, and shall conform to the requirements specified in Section 6.

Check Analysis

8. (*a*) At the request of the purchaser's inspector, an analysis of one billet from each heat or two pipes from each lot shall be made by the manufacturer. A lot of pipe shall consist of the following:

Nominal Diameter, in.	Lengths of Pipe in Lot
Under 2	400 or fraction thereof
2 to 5 incl.	200 or fraction thereof
6 and over	100 or fraction thereof

(*b*) Sampling for chemical analysis, except for spectrochemical analysis, shall be taken in accordance with the Method of Sampling Steel, Cast Iron, Open Hearth Iron, and Wrought Iron for Determination of Chemical Composition (ASTM Designation: E 59).

(*c*) The results of these analyses shall be reported to the purchaser or his representative, and shall conform to the requirements specified in Section 6.

(*d*) If the analysis of one of the tests specified in Sections 7 or 8(*a*) does not conform to the requirements specified in Section 6, an analysis of each billet or pipe from the same heat or lot may be made, and all billets or pipe conforming to the requirements shall be accepted.

Tensile Properties

9. (*a*) The tensile properties of the material, at room temperature, shall conform to the requirements prescribed in Table II.

TABLE I.—CHEMICAL REQUIREMENTS.

Grade	Carbon per cent	Manganese, max, per cent	Phosphorus, max, per cent	Sulfur, max, per cent	Silicon, max, per cent	Nickel, per cent	Chromium, per cent	Molybdenum, per cent	Titanium, per cent	Columbium plus tantalum, per cent	Tantalum, max, per cent
Tp 304	0.08 max	2.00	0.040	0.030	0.75	8.00 to 11.0	18.0 to 20.0	...	...	...	...
TP 304H	0.04 to 0.10	2.00	0.040	0.030	0.75	8.00 to 11.0	18.0 to 20.0	...	...	...	...
TP 304L	0.035 max[a]	2.00	0.040	0.030	0.75	8.00 to 13.0	18.0 to 20.0	...	...	...	...
TP 309	0.15 max	2.00	0.040	0.030	0.75	12.0 to 15.0	22.0 to 24.0	...	...	...	...
TP 310	0.15 max	2.00	0.040	0.030	0.75	19.0 to 22.0	24.0 to 26.0	...	...	...	...
TP 316	0.08 max	2.00	0.040	0.030	0.75	11.0 to 14.0	16.0 to 18.0	2.0 to 3.0	...	...	...
TP 316H	0.04 to 0.10	2.00	0.040	0.030	0.75	11.0 to 14.0	16.0 to 18.0	2.0 to 3.0	...	...	...
TP 316L	0.035 max[a]	2.00	0.040	0.030	0.75	10.0 to 15.0	16.0 to 18.0	2.00 to 3.00	...	...	...
TP 317	0.08 max	2.00	0.040	0.030	0.75	11.0 to 14.0	18.0 to 20.0	3.0 to 4.0	...	...	...
TP 321	0.08 max	2.00	0.040	0.030	0.75	9.00 to 13.0	17.0 to 20.0	...	[b]	...	...
TP 321H	0.04 to 0.10	2.00	0.040	0.030	0.75	9.00 to 13.0	17.0 to 20.0	...	[d]	...	...
TP 347	0.08 max	2.00	0.040	0.030	0.75	9.00 to 13.0	17.0 to 20.0	...	...	[c]	...
TP 347H	0.04 to 0.10	2.00	0.040	0.030	0.75	9.00 to 13.0	17.0 to 20.0	...	...	[e]	...
TP 348	0.08 max	2.00	0.040	0.030	0.75	9.00 to 13.0	17.0 to 20.0	...	...	[c]	0.10
TP 348H	0.04 to 0.10	2.00	0.040	0.030	0.75	9.00 to 13.0	17.0 to 20.0	...	...	[e]	0.10

[a] For small diameter or thin walls or both, where many drawing passes are required, a carbon maximum of 0.040 per cent is necessary in grades TP 304L and TP 316L. Small outside diameter tubes are defined as those less than 0.500 in. in outside diameter and light wall tubes as those less than 0.049 in. in average wall thickness (0.044 in. in minimum wall thickness).

[b] The titanium content shall be not less than five times the carbon content and not more than 0.60 per cent.

[c] The columbium plus tantalum content shall be not less than ten times the carbon content and not more than 1.00 per cent.

[d] The titanium content shall be not less than four times the carbon content and not more than 0.60 per cent.

[e] The columbium plus tantalum content shall be not less than eight times the carbon content and not more than 1.0 per cent.

(*b*) The yield point shall be determined by the drop of the beam, by the halt in the gage of the testing machine, by the use of dividers, or by other approved methods. When a definite yield point is not exhibited, the yield strength corresponding to a permanent offset of 0.2 per cent of the gage length of the specimen, or to a total extension of 0.5 per cent of the gage length under load shall be determined.

Bending Properties

10. For pipe 2 in. and under in nominal diameter, a sufficient length of pipe shall stand being bent cold through 90 deg around a cylindrical mandrel which is twelve times the nominal diameter of the pipe, without developing cracks. When ordered for close coiling, the pipe shall stand being bent cold through 180 deg around a cylindrical mandrel, the diameter of which is eight times the nominal diameter of the pipe, without failure.

Flattening Test

11. (*a*) The flattening test shall be made on pipe over 2 in. in nominal diameter.

(*b*) *Seamless Pipe.*—For seamless pipe a section not less than 2½ in. in length shall be flattened cold between parallel plates in two steps. During the first step, which is a test for ductility, no cracks or breaks on the inside, outside or end surfaces shall occur until the distance between the plates is less than the value of "H" calculated by the following formula:

$$H = \frac{(1 + e)t}{e + t/D}$$

TABLE II.—TENSILE REQUIREMENTS.

Tensile strength, min, psi ..... 75 000[a, b]
Yield strength, min, psi ..... 30 000[a]

	Longitudinal	Transverse
Elongation in 2 in., min, per cent:		
Basic minimum elongation for walls 5/16 in. and over in thickness, strip tests, and for all small sizes tested in full section	35	25
When standard round 2-in. gage length test specimen is used	28	20
For strip tests, the width of the gage length shall be 1½ in. and a deduction for each 1/32-in. decrease in wall thickness below 5/16 in. from the basic minimum elongation of the following percentage	1.75[c]	1.25[c]

[a] For grades TP 304L and TP 316L the minimum tensile strength shall be 70,000 psi and the minimum yield strength shall be 25,000 psi.

[b] For grade TP 304, in sizes of 8 in. nominal diameter and larger and schedule 140 and heavier, the minimum tensile strength shall be 70,000 psi.

[c] The following table gives the computed minimum values:

Wall Thickness, in.	Elongation in 2 in., min, per cent	
	Longitudinal	Transverse
5/16 (0.312)	35.00	25.00
9/32 (0.281)	33.25	23.75
1/4 (0.250)	31.50	22.50
7/32 (0.219)	29.75	...
3/16 (0.188)	28.00	...
5/32 (0.156)	26.25	...
1/8 (0.125)	24.50	...
3/32 (0.094)	22.75	...
1/16 (0.062)	21.00	...

NOTE.—The above table gives the computed minimum elongation values for each 1/32-in. decrease in wall thickness. When the wall thickness lies between two values shown above, the minimum elongation value is determined by the following equation:

Longitudinal ..... $E = 56t + 17.50$
Transverse ..... $E = 40t + 12.50$

where:
E = elongation in 2 in., in per cent, and
t = actual thickness of specimen, in inches.

where:
H = distance between flattening plates in inches,
e = deformation per unit length (constant for a given grade of steel, 0.09 for austenitic steels),
t = nominal wall thickness of pipe in inches, and
D = actual outside diameter of pipe in inches.

During the second step, which is a test for soundness, the flattening shall be continued until the specimen breaks or the opposite walls of the pipe meet. Evidence of laminated or unsound material that is revealed during the entire flattening test shall be cause for rejection.

(*c*) *Welded Pipe.*—For welded pipe a section of pipe not less than 4 in. in length shall be flattened cold between parallel plates in two steps. The weld shall be placed 90 deg from the direction of the applied force. During the first step, which is a test for ductility of the weld, no cracks or breaks on the inside or outside surfaces shall occur until the distance between the plates is less than the value of "H" calculated by the formula in Paragraph (*b*). During the second step, which is a test for soundness, the flattening shall be continued until the specimen breaks or the opposite walls of the pipe meet. Evidence of laminated or unsound material or incomplete weld that is revealed during the entire flattening test shall be cause for rejection.

(*d*) Surface imperfections in the test specimen before flattening, but revealed during the first step of the flattening test, shall be judged in accordance with the finish requirements in Section 20.

(*e*) Superficial ruptures as a result of surface imperfections shall not be cause for rejection.

Hydrostatic Test

12. (*a*) Unless otherwise agreed upon between the manufacturer and the purchaser, each length of pipe shall be tested by the manufacturer to a hydrostatic pressure which will produce in the pipe wall a stress of 50 per cent of the minimum specified yield point at room temperature. This pressure shall be determined by the following formula:

$$P = \frac{2St}{D}$$

where:
P = minimum hydrostatic test pressure in pounds per square inch,
S = allowable fiber stress of 15,000 psi,
t = nominal wall thickness in inches, and
D = outside diameter in inches.

(*b*) The maximum hydrostatic test pressure shall not exceed 2500 psi for nominal sizes 3 in. and under, or 2800 psi for all nominal sizes over 3 in. The hydrostatic pressure shall be maintained for not less than 5 sec.

NOTE 2.—When requested by the purchaser and so stated in the order, pipe in sizes 14 in. in nominal diameter and smaller shall be tested to one and one-half times the specified working pressure, provided the fiber stress corresponding to those test pressures does not exceed one-half the minimum specified yield point of the material as determined by the above formula. When one and one-half times the working pressure exceeds 2800 psi, the hydrostatic test pressure shall be a matter of agreement between the purchaser and the manufacturer.

Test Specimens and Methods of Testing

13. (*a*) The test specimens and the tests required by these specifications shall conform to those described in the Methods and Definitions for the Mechanical Testing of Steel Products (ASTM Designation: A 370).

(*b*) Specimens cut either longitudinally or transversely shall be acceptable for the tension test.

(*c*) The longitudinal tension test may be made in full section of the pipe up to the capacity of the testing machine. For larger sizes, the tension test specimens shall consist of strips cut from the pipe. The width of these specimens shall be 1½ in. and shall have a gage length of 2 in. When the pipe wall thickness is ¾ in. and over, the ASTM standard 2-in. gage length tension test specimen shown in Fig. 6 of Methods A 370 may be used. Longitudinal tension specimens shall be parallel between gage marks.

(*d*) At the option of the manufacturer, the transverse tension test specimen may be machined off on either surface provided not over 15 per cent of the nominal thickness is removed from either side.

(*e*) Test specimens for the bend and flattening tests shall consist of sections cut from a pipe. Specimens for flattening tests shall be smooth on the ends and free from burrs, except when made on crop ends.

(*f*) All routine check tests shall be made at room temperature.

Number of Tests

14. (*a*) The transverse or longitudinal tension test specified in Section 9 shall be performed on 1 per cent of the pipe from each lot.[4]

(*b*) For material heat treated in a batch type furnace, tests shall be made as follows on 5 per cent of the pipe from each heat-treated lot.[4] Results of these tests shall be reported to the purchaser or his representative:

The bend test specified in Section 10 for pipe 2 in. and under in nominal diameter, and

The flattening test specified in Section 11 for pipe over 2 in. in nominal diameter.

(*c*) For material heat treated by the continuous process, the tests specified in Paragraph (*b*) shall be made on a sufficient number of pipe to constitute 5 per cent of the lot,[4] but in no case less than 2 pipes.

(*d*) If any test specimen shows defective machining or develops flaws, it may be discarded and another specimen substituted.

(*e*) If the percentage of elongation of any tension test specimen is less than that specified in Section 9(*a*) and any part of the fracture is more than ¾ in. from the center of the gage length as indicated by scribe scratches marked on the specimen before testing, a retest shall be allowed. If a specimen breaks in an inside or outside surface flaw, a retest shall be allowed.

(*f*) Each length of pipe shall be subjected to the hydrostatic test specified in Section 12.

Retest

15. If the results of any mechanical tests or any lot[4] do not conform to the requirements specified in Sections 9, 10,

[4] The term "lot" applies to all pipe of the same nominal size and wall thickness (or schedule) which is produced from the same heat of steel and subjected to the same finishing treatment in a continuous furnace; when final heat treatment is in a batch type furnace, the lot shall include only that pipe which is heat treated in the same furnace charge. When no heat treatment is performed following final forming operations, the lot shall include hot rolled material only or cold drawn material only.

or 11, retests shall be made on additional pipes of double the original number from the same lot, each of which shall conform to the requirements specified.

Retreatment

16. If individual lengths of pipe selected to represent any lot fail to conform to the test requirements specified in Sections 9, 10, or 11, the lot may be reheat-treated and resubmitted for test except that any individual lengths which meet the test requirements before retesting will be acceptable.

Permissible Variations in Weights and Dimensions

17. (*a*) *Weight.*—The weight of any length of pipe in nominal sizes of 12 in. and under shall not vary more than 6.5 per cent over and 3.5 per cent under that specified. Unless otherwise agreed upon between the manufacturer and the purchaser, pipe in sizes 4 in. and smaller may be weighed in convenient lots; pipe in sizes larger than 4 in. shall be weighed separately.

NOTE 3.—A system of standard pipe sizes has been approved by the American Standards Association as American Standard for Stainless Steel Pipe (ASA No. B36.19–1957). For information, the schedules of nominal sizes and wall thicknesses (Table 1 of American Standard B36.19–1957) are reproduced as Table III in the Appendix to these specifications.

(*b*) *Diameter.*—Variations in outside diameter shall not exceed the following:

Nominal Diameter, in.	Permissible Variations in Outside Diameter, in.	
	Over	Under
⅛ to 1½, incl.	1/64 (0.015)	1/32 (0.031)
Over 1½ to 4, incl.	1/32 (0.031)	1/32 (0.031)
Over 4 to 8, incl.	1/16 (0.062)	1/32 (0.031)
Over 8 to 12, incl.	3/32 (0.093)	1/32 (0.031)

(*c*) *Thickness.*—The minimum wall thickness at any point shall not be more than 12.5 per cent under the nominal wall thickness specified.

Lengths

18. Pipe lengths shall be in accordance with the following regular practice:

(*a*) Unless otherwise agreed upon, all sizes from ⅛ in. to and including 8 in. nominal outside diameter (Note 4) are available in a length up to 24 ft. The aim range will be 20 to 24 ft with the permissible range of 15 to 24 ft. Short lengths are acceptable and the number and minimum length shall be agreed upon between the manufacturer and the purchaser.

NOTE 4.—Sizes 10 and 12 in., listed in Table III, are not generally available, and are furnished only by special agreement.

(*b*) If definite cut lengths are desired the lengths required shall be specified in the order. No pipe shall be under the specified length and not more than ¼ in. over that specified.

(*c*) No jointers are permitted unless otherwise specified.

Ends

19. Unless otherwise specified, pipe shall be furnished with plain ends. All burrs at the ends of the pipe shall be removed.

Finish

20. The finished pipes shall be reasonably straight and free from injurious defects, and shall have a workmanlike finish. Minor defects may be removed by grinding, provided the wall thicknesses are not decreased to less than that permitted in Section 17(*c*).

Marking

21. (*a*) Each length of pipe manufactured in accordance with these specifications shall be legibly marked, either by stenciling, stamping, or rolling, with the manufacturer's private identifying mark, with the designation A 312, the length, and the grade. Marking shall begin approximately 12 in. from one end of each length. On pipe sizes larger than 4 in., the weight shall be given. For grades TP 304H, TP 316H, TP 321H, TP 347H, and TP 348H, the marking shall also include the heat number and the heat treatment lot identification. On small diameter pipe which is bundled, the above information may be legibly stamped on a metal tag securely attached to each bundle. When pipe marked as specified in this section is rejected, the designation A 312 shall be canceled. The marking paint or ink shall not contain any harmful metal or metal salts, such as zinc, lead, or copper, which cause corrosive attack on heating.

(*b*) When it is specified that certain requirements of these specifications are to be completed by the purchaser upon receipt of the material, the manufacturer shall indicate that all requirements of the specifications have not been completed by a letter X, Y, or Z immediately following the specification number. This letter may be removed after completion of all requirements in accordance with these specifications. An explanation of specification requirements to be completed is provided in Section 22(*b*).

Inspection

22. (*a*) The inspector representing the purchaser shall have free entry, at all times while work on the contract of the purchaser is being performed, to all parts of the manufacturer's works that concern the manufacture of the material ordered. The manufacturer shall afford the inspector, without charge, all reasonable facilities to satisfy him that the material is being furnished in accordance with these specifications. All tests and inspection shall be made at the place of manufacture prior to shipment, and at the manufacturer's expense, unless otherwise specified, and shall be so conducted as not to interfere unnecessarily with the operation of the works. When specified in the order, the manufacturer shall notify the purchaser in time so that he may have his inspector present to witness any part of the manufacture or tests that may be desired.

(*b*) *Certification.*—When agreed upon in writing between the manufacturer and the purchaser, a certification that the material conforms to the requirements of these specifications shall be the basis of acceptance of the material. Otherwise, the manufacturer shall report to the purchaser or his representative the results of the chemical analyses and mechanical tests made in accordance with these specifications. The certificate or report accomplished by the manufacturer shall include a statement of explanation for the letter added to the specification number (see Section 21(*b*)), when all the requirements of these specifications have not been completed. The purchaser must certify that all requirements of the specifications have been completed before removal of the letter X, Y, or Z.

Rejection

23. Each length of pipe that develops injurious defects during shop working or application operations will be rejected,

and the manufacturer shall be notified. No rejections under these or any other specifications shall be marked as specified in Section 21 for sale under these specifications except where such pipe fails to comply with the weight requirements alone, in which case it may be sold under the weight specifications with which it does comply.

SUPPLEMENTARY REQUIREMENTS FOR PIPE REQUIRING SPECIAL CONSIDERATION

S1. These supplementary requirements shall be considered only when specified in the order, in which event they shall be performed at the mill at the purchaser's expense.

Unless otherwise specified in the order, the tests covered in Supplementary Requirements S2 to S5 shall be performed. This number of supplementary tests is commonly considered sufficient to determine the quality of pipe intended for severe service. However, more or fewer tests may be agreed upon at the purchaser's discretion.

Check Analysis

S2. For all pipe 5 in. and larger in nominal size there shall be one check analysis made of a representative sample from one piece for each ten lengths or fraction thereof from each heat of steel.

For pipe smaller than 5 in. in nominal size there shall be one check analysis made from ten lengths per heat of steel or from 10 per cent of the number of lengths per heat of steel, whichever number is smaller.

Individual lengths failing to conform to the chemical requirements specified in Section 6 shall be rejected.

Transverse Tension Tests

S3. There shall be one transverse tension test made from one end of 10 per cent of the lengths furnished per heat of steel. This applies only to pipe 8 in. and larger in nominal size.

If a specimen from any length fails to conform to the mechanical properties specified in Section 9, that length shall be rejected.

Flattening Tests

S4. The flattening test specified in Section 11 shall be made on specimens from one end of each length of pipe. This requirement applies only to pipe over 2 in. in nominal diameter. Crop ends may be used. If the specimen from any length fails to conform to the specified requirement, that length shall be rejected.

Etching Tests

S5. An etching test[5] shall be made on a transverse section from one end of each length and shall show sound, homogeneous, and reasonably uniform material, free from injurious laminations, cracks, and similar objectionable defects. If the specimen of any length shows objectionable defects, one retest shall be permitted from the same end. If this fails, the length shall be rejected. The rings for the flattening tests (Supplementary Requirement S4), either before or after flattening, may be used for etch tests.

[5] Pending development of etching methods applicable to the product covered by these specifications, it is recommended that the Recommended Practice for a Standard Macro-Etch Test for Routine Inspection of Iron and Steel, described in the *Metals Handbook*, Am. Soc. for Metals, 1948 edition, p. 389, be followed.

APPENDIX

The following Table III is a reprint of Table I of The American Standard for Stainless Steel Pipe (ASA No. B36.19—1957) which is referred to in the note under Section 17(*a*) of these specifications.

TABLE III.—DIMENSIONS OF WELDED AND SEAMLESS STAINLESS STEEL PIPE.

NOTE.—The decimal thickness listed for the respective pipe sizes represents their nominal or average wall dimensions.

Nominal Pipe Size, in.	Outside Diameter, in.	Nominal Wall Thickness, in.			
		Schedule 5S[a]	Schedule 10S[a]	Schedule 40S	Schedule 80S
⅛	0.405	....	0.049	0.068	0.095
¼	0.540	....	0.065	0.088	0.119
⅜	0.675	....	0.065	0.091	0.126
½	0.840	0.065	0.083	0.109	0.147
¾	1.050	0.065	0.083	0.113	0.154
1	1.315	0.065	0.109	0.133	0.179
1¼	1.660	0.065	0.109	0.140	0.191
1½	1.900	0.065	0.109	0.145	0.200
2	2.375	0.065	0.109	0.154	0.218
2½	2.875	0.083	0.120	0.203	0.276
3	3.500	0.083	0.120	0.216	0.300
3½	4.000	0.083	0.120	0.226	0.318
4	4.500	0.083	0.120	0.237	0.337
5	5.563	0.109	0.134	0.258	0.375
6	6.625	0.109	0.134	0.280	0.432
8	8.625	0.109	0.148	0.322	0.500
10	10.750	0.134	0.165	0.365	0.500[b]
12	12.750	0.156	0.180	0.375[b]	0.500[b]

[a] Schedules 5S and 10S wall thicknesses do not permit threading in accordance with the American Standard for Pipe Threads (ASA No. B2.1—1945).

[b] These do not conform to the American Standard for Wrought Steel and Wrought Iron Pipe (ASA No. B36.10—1959).

SPECIFICATION FOR LOW-ALLOY STEEL COVERED ARC-WELDING ELECTRODES

SA-316

(IDENTICAL WITH ASTM SPECIFICATION A 316-58T)

Scope

1. This specification prescribes requirements for covered low-alloy steel metal arc-welding electrodes for welding carbon and low-alloy steels.

PART I—CLASSIFICATION AND ACCEPTANCE

Classification

2. (*a*) The electrodes are classified on the basis of the mechanical properties of the stress-relieved deposited weld metal, type of covering, welding position of the electrode, and type of current as well as chemistry of the deposited metal. (See Tables I and II.)

(*b*) Any electrode classified under one classification shall not be classified under any other classification.

Manufacture

3. The electrodes may be made by any method that will yield a product conforming to the requirements of this specification.

Acceptability

4. At the option and expense of the purchaser any or all of the tests required by this specification may be used as a basis for acceptance of the electrodes.

Chemical Composition

5. The chemical composition of the

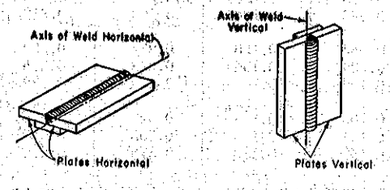

(*a*) Flat Groove Welds. (*b*) Vertical Groove Welds.

FIG. 1—Positions of Test Plates for Welding Longitudinal Guided-Bend Test Specimens.

TABLE I.—ELECTRODE CLASSIFICATION.

AWS-ASTM Classification	Type of Covering	Usable Welding Positions[a]	Type of Current
E70 SERIES.—MINIMUM TENSILE STRENGTH OF DEPOSITED METAL IN STRESS-RELIEVED CONDITION 70 000 PSI			
E7010-X[b]	High cellulose sodium	F, V, OH, H	dc, reverse polarity (electrode positive) only
E7011-X	High cellulose potassium	F, V, OH, H	ac or dc, reverse polarity (electrode positive)
E7015-X	Low hydrogen sodium	F, V, OH, H	dc, reverse polarity (electrode positive) only
E7016-X	Low hydrogen potassium	F, V, OH, H	ac or dc, reverse polarity (electrode positive)
E7018-X	Iron powder, low hydrogen	F, V, OH, H	ac or dc, reverse polarity (electrode positive)
E7020-X	High iron oxide	H-Fillets, F	dc, straight polarity (electrode negative) or ac for horizontal fillet welds; and dc, either polarity, or ac for flat-position welding
E80 SERIES.—MINIMUM TENSILE STRENGTH OF DEPOSITED METAL IN STRESS-RELIEVED CONDITION 80 000 PSI			
E8010-X[b]	High cellulose sodium	F, V, OH, H	dc, reverse polarity (electrode positive) only
E8011-X	High cellulose potassium	F, V, OH, H	ac or dc, reverse polarity (electrode positive)
E8013-X	High titania potassium	F, V, OH, H	ac or dc, straight polarity (electrode negative)
E8015-X	Low hydrogen sodium	F, V, OH, H	dc, reverse polarity (electrode positive) only
E8016-X	Low hydrogen potassium	F, V, OH, H	ac or dc, reverse polarity (electrode positive)
E8018-X	Iron powder, low hydrogen	F, V, OH, H	ac or dc, reverse polarity (electrode positive)
E90 SERIES.—MINIMUM TENSILE STRENGTH OF DEPOSITED METAL IN STRESS-RELIEVED CONDITION 90 000 PSI			
E9010-X[b]	High cellulose sodium	F, V, OH, H	dc, reverse polarity (electrode positive) only
E9011-X	High cellulose potassium	F, V, OH, H	ac or dc, reverse polarity (electrode positive)
E9013-X	High titania potassium	F, V, OH, H	ac or dc, straight polarity (electrode negative)
E9015-X	Low hydrogen sodium	F, V, OH, H	dc, reverse polarity (electrode positive) only
E9016-X	Low hydrogen potassium	F, V, OH, H	ac or dc, reverse polarity (electrode positive)
E9018-X	Iron powder, low hydrogen	F, V, OH, H	ac or dc, reverse polarity (electrode positive)

AWS-ASTM Classification	Type of Covering	Usable Welding Positions[a]	Type of Current
E100 SERIES.—MINIMUM TENSILE STRENGTH OF DEPOSITED METAL IN STRESS-RELIEVED CONDITION 100 000 PSI			
E10010-X[b]	High cellulose sodium	F, V, OH, H	dc, reverse polarity (electrode positive) only
E10011-X	High cellulose potassium	F, V, OH, H	ac or dc, reverse polarity (electrode positive)
E10013-X	High titania potassium	F, V, OH, H	ac or dc, straight polarity (electrode negative)
E10015-X	Low hydrogen sodium	F, V, OH, H	dc, reverse polarity (electrode positive) only
E10016-X	Low hydrogen potassium	F, V, OH, H	ac or dc, reverse polarity (electrode positive)
E10018-X	Iron powder, low hydrogen	F, V, OH, H	ac or dc, reverse polarity (electrode positive)
E110 SERIES.—MINIMUM TENSILE STRENGTH OF DEPOSITED METAL IN STRESS-RELIEVED CONDITION 110 000 PSI			
E11015-X[b]	Low hydrogen sodium	F, V, OH, H	dc, reverse polarity (electrode positive) only
E11016-X	Low hydrogen potassium	F, V, OH, H	ac or dc, reverse polarity (electrode positive)
E11018-X	Iron powder, low hydrogen	F, V, OH, H	ac or dc, reverse polarity (electrode positive)
E120 SERIES.—MINIMUM TENSILE STRENGTH OF DEPOSITED METAL IN STRESS-RELIEVED CONDITION 120 000 PSI			
E12015-X[b]	Low hydrogen sodium	F, V, OH, H	dc, reverse polarity (electrode positive) only
E12016-X	Low hydrogen potassium	F, V, OH, H	ac or dc, reverse polarity (electrode positive)
E12018-X	Iron powder, low hyrdogen	F, V, OH, H	ac or dc, reverse polarity (elec trode positive)

[a] The abbreviations F, V, OH, and H and H-Fillets indicate welding positions (Figs. 1 and 2) as follows:
F = Flat
H = Horizontal
H-Fillets = Horizontal Fillets
V = Vertical } For electrodes 3/16 in. and under, except 5/32 in. and under for classifications EXX15-X, EXX16-X and EXX18-X.
OH = Overhead

[b] The letter suffix "-X" as used in this table stands for the suffixes A1, B1, B2, etc. (see Table II) and designates the chemical composition of the deposited weld metal.

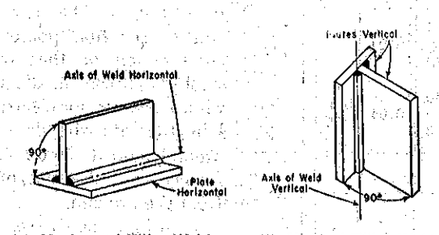

(*a*) Horizontal Fillet Welds. (*b*) Vertical Fillet Welds.

FIG. 2.—Positions of Test Plates for Welding Fillet-Weld Test Specimens.

deposited metal shall conform with the requirements of Table II.

Mechanical Tests

6. The following tests are prescribed to demonstrate the mechanical properties and soundness of the deposited metal and the usability of the electrodes classified herein:

	Section
All-Weld-Metal Tension Test	21
Longitudinal Guided-Bend Test	22
Fillet-Weld Test	23

Methods of Test

7. Test specimens shall be prepared in accordance with Sections 17 through 23 of this specification.

Test Requirements

8. In order to be classified under this specification, an electrode shall be capable of yielding the following mechanical test results in addition to the chemical requirements prescribed in Section 5:

(*a*) All-weld-metal tension test specimens, after stress relief, shall conform to the mechanical requirements prescribed in Table III.

(*b*) Longitudinal guided-bend test specimens, after bending, shall show no crack or other open defect exceeding 1/8 in. measured in any direction. Cracks occurring on corners of a specimen during testing shall not be considered.

(*c*) Fillet-weld test specimens shall be free from cracks or other open defects. Examination of the section that has been polished and etched as prescribed shall show the following:

(*1*) Each fillet weld shall have penetrated to or beyond the junction of the plate edges.

(*2*) Both legs of each fillet weld shall be of equal length within 1/16 in.

(*3*) The convexity (of convex fillet welds) shall be not more than 3/64 in. for a 1/8-in. fillet weld, plus 1/64 in. additional for each additional 1/8 in. of weld size (see Fig. 7).

(*4*) The welds shall be free from cracks, and

(*5*) The weldment shall be reasonably free from undercut, overlap, trapped slag, and porosity.

TABLE II.—CHEMICAL REQUIREMENTS.

NOTE.—Single values shown are maximum percentages, except where otherwise specified.

AWS-ASTM Classification	Carbon, per cent	Molybdenum, per cent	Chromium, per cent	Manganese, per cent	Silicon, per cent	Sulfur, per cent	Nickel, per cent	Vanadium, per cent
CARBON-MOLYBDENUM STEEL ELECTRODES								
E7010-A1	0.12	0.40 to 0.65	...	0.60	0.40	0.04	...	...
E7011-A1				0.60	0.40			
E7015-A1				0.90	0.60			
E7016-A1				0.90	0.60			
E7018-A1				0.90	0.80			
E7020-A1				0.60	0.40			
CHROMIUM-MOLYBDENUM STEEL ELECTRODES								
E8010-B1	0.12	0.40 to 0.65	0.40 to 0.65	0.60	0.40	0.04	...	...
E8011-B1				0.60	0.40			
E8013-B1				0.60	0.40			
E8015-B1				0.90	0.60			
E8016-B1				0.90	0.60			
E8018-B1				0.90	0.80			
E8015-B2L	0.05	0.40 to 0.65	1.00 to 1.50	0.90	1.00	0.04	...	...
E8010-B2	0.12	0.40 to 0.65	1.00 to 1.50	0.60	0.40	0.04	...	...
E8011-B2				0.60	0.40			
E8013-B2				0.60	0.40			
E8015-B2				0.90	0.60			
E8016-B2				0.90	0.60			
E8018-B2				0.90	0.80			
E9015-B3L	0.05	0.90 to 1.20	2.00 to 2.50	0.90	1.00	0.04	...	...
E9015-B3	0.12	0.90 to 1.20	2.00 to 2.50	0.90	0.60			
E9016-B3					0.60			
E9018-B3					0.80			
E8015-B4L	0.05	0.40 to 0.65	1.75 to 2.25	0.90	1.00	0.04	...	...
E8015-B4	0.12	0.40 to 0.65	1.75 to 2.25	0.90	0.60			
E8016-B4					0.60			
E8018-B4					0.80			
NICKEL STEEL ELECTRODES								
E8015-C1	0.12	...	...	1.00	0.60	0.04	2.00 to 2.75	...
E8016-C1					0.60			
E8018-C1					0.80			
E8015-C2	0.12	...	...	1.00	0.60	0.04	3.00 to 3.75	...
E8016-C2					0.60			
E8018-C2					0.80			
E8015-C3	0.12	...	...	1.00	0.60	0.04	0.80 to 1.10	...
E8016-C3					0.60			
E8018-C3					0.80			
MANGANESE-MOLYBDENUM STEEL ELECTRODES								
E9015-D1	0.12	0.25 to 0.45	...	1.25 to 1.75	0.60	0.04	...	...
E9016-D1					0.60			
E9018-D1					0.80			
E10015-D2	0.15	0.25 to 0.45	...	1.65 to 2.00	0.60	0.04	...	...
E10016-D2					0.60			
E10018-D2					0.80			
ALL OTHER LOW ALLOY ELECTRODES								
EXX10-G	...	0.20 min[a]	0.30 min[a]	1.00 min[a]	0.80 min[a]	...	0.50 min[a]	0.10 min[a]
EXX11-G								
EXX13-G								
EXX15-G								
EXX16-G								
EXX18-G								
E7020-G								

[a] In order to meet the alloy requirements of the G group, the deposit need have the minimum, as specified in the table, of only one of the elements listed.

Retests

9. If any specimen fails, one additional test assembly shall be welded and tested and the results shall meet the requirements of Section 8. A specimen which fails in the base metal shall be considered no test.

Core Wire and Coverings

10. (*a*) The diameter of the core wire shall not vary more than ± 0.002 in. from the standard size specified. The length shall not vary more than ± ¼ in. from that specified.

(*b*) The covering on all sizes of electrodes shall be concentric to the extent that the maximum core-plus-one-covering dimension shall not exceed the minimum core-plus-one-covering dimension by more than 5 per cent of the mean dimension for EXX15, EXX16, and EXX18 electrodes and 3 per cent for all other classes of electrodes. The concentricity shall be measured by any suitable means.

(*c*) Core wire and coverings shall be free of defects which would interfere with uniform performance of the electrodes.

Exposed Core

11. (*a*) Covered electrodes for manual welding shall be bare or free from covering for a distance of about ¾ in., but not more than 1¼ in., for electrodes not exceeding $\frac{7}{32}$ in. (1½ in. for ¼- and $\frac{5}{16}$-in. electrodes) for making contact with the holder.

(*b*) The arc end of each electrode shall be sufficiently bare to permit easy striking of the arc. The distance from the arc end to the first point where the full cross-section of the covering prevails shall not exceed the diameter of the core wire. However, for electrodes larger than ⅛ in. the core wire shall not be exposed around more than one-half the circumference at a distance of ⅛ in. or more from the arc end.

Standard Sizes and Lengths

12. Standard sizes and lengths of electrodes are as shown in Table IV. In all cases, standard size refers to the diameter of the core wire.

TABLE III.—MINIMUM TENSILE STRENGTH AND DUCTILITY REQUIREMENTS FOR STRESS-RELIEVED ALL-WELD-METAL TENSION TEST SPECIMEN.

AWS-ASTM Classification[a]	Tensile Strength, min, psi	Yield Point, min, psi[a]	Elongation in 2 in., min, per cent
E7010-X	70 000	57 000	22
E7011-X	70 000	57 000	22
E7015-X	70 000	57 000	22
E7016-X	70 000	57 000	22
E7018-X	70 000	57 000	22
E7020-X	70 000	57 000	25
E8010-X	80 000	67 000	19
E8011-X	80 000	67 000	19
E8013-X	80 000	67 000	16
E8015-X	80 000	67 000	19
E8016-X	80 000	67 000	19
E8018-X	80 000	67 000	19
E9010-X	90 000	77 000	17
E9011-X	90 000	77 000	17
E9013-X	90 000	77 000	14
E9015-X	90 000	77 000	17
E9016-X	90 000	77 000	17
E9018-X	90 000	77 000	17
E10010-X	100 000	87 000	16
E10011-X	100 000	87 000	16
E10013-X	100 000	87 000	13
E10015-X	100 000	87 000	16
E10016-X	100 000	87 000	16
E10018-X	100 000	87 000	16
E11015-X	110 000	97 000	15
E11016-X	110 000	97 000	15
E11018-X	110 000	97 000	15
E12015-X	120 000	107 000	14
E12016-X	120 000	107 000	14
E12018-X	120 000	107 000	14

[a] The letter suffix "-X" as used in this table stands for the suffixes A1, B1, B2, etc., (see Table II) and designates the chemical composition of the deposited weld metal.

TABLE IV.—STANDARD SIZES AND LENGTHS.

Standard Sizes, Diameter of Core Wire, in.	Standard Lengths, in [a, b]	
	All Classifications Except E7020-X	E7020-X Classifications
5/32[c]	12	12
1/8	14	14
5/32	14	14
3/16	14	14 or 18
7/32[c]	14 or 18	18
1/4[c]	18	18
5/16[c]	18	18

[a] Electrodes may also be provided in coils or reels.

[b] In all cases, end gripping is standard.

[c] These diameters are not manufactured in all classifications of electrodes (see Table V).

Color Markings for Electrode Identification

15. All electrodes shall be color marked in accordance with the current "Standard for Identification of Covered Arc-Welding Electrodes" of the National Electrical Manufacturers Association.

Guarantee

16. The manufacturer shall guarantee that the electrodes in all sizes and classifications conform to this specification. The manufacturer's responsibility shall be limited to replacement of any electrodes that do not conform to the requirements of this specification.

Packaging

13. Electrodes shall be packaged as follows:

(*a*) Bundles or boxes, not exceeding 75 lb net weight, or

(*b*) Coils or reels, not exceeding approximately 200 lb net weight.

Marking

14. All bundles, boxes, coils, and reels shall be legibly marked with the following information:

(*a*) Classification,

(*b*) Manufacturer's name and trade designation, and

(*c*) Size and net weight.

PART II.—DETAILS OF TESTS

Required Tests

17. (*a*) The tests specified in Sections 5 and 6 shall be conducted in accordance with the requirements of Sections 18 to 23, incl., of this Part II.

(*b*) Mechanical tests shall be made in accordance with the requirements of Table V for each size and classification of

TABLE V.—SUMMARY OF MECHANICAL TESTS REQUIRED.

AWS-ASTM Classification[c]	Diameter, in.	Current and Polarity	All-Weld-Metal Tension Test[a]	Longitudinal-Bend Test[a]		Fillet-Weld Test[a]
				Root	Face	
E7010-X	5/32 and 1/8	(dc, reverse polarity (electrode positive)[b]	not required	not required	not required	not required
E8010-X	5/32		F	V	V	V
E9010-X	3/16		F	V E7010[b]	V	V
E10010-X	7/32		not required	not required	not required	not required
	1/4		F	not required	F	H
E7011-X	5/32 and 1/8	(ac and dc, reverse polarity (electrode positive)	not required	not required	not required	not required
E8011-X	5/32		F	V	V	V
E9011-X	3/16		F	V E7011[b]	V	V
E10011-X	7/32		not required	not required	not required	not required
	1/4		F	not required	F	H
E8013-X	5/32 and 1/8	(ac and dc, straight polarity (electrode negative)	not required	not required	not required	not required
E9013-X	5/32		F	V	V	V
E10013-X	7/32		F	not required	V	V
E7015-X	5/32 and 1/8	(dc, reverse polarity (electrode positive)	not required	not required	not required	not required
E8015-X	5/32		F	V	V	V
E9015-X	3/16		F	not required	F	H
E10015-X	7/32		not required	not required	not required	not required
E11015-X	1/4		F	not required	F	H
E12015-X						
E7016-X	5/32 and 1/8	(ac and dc, reverse polarity (electrode positive)	not required	not required	not required	not required
E8016-X	5/32		F	V	V	V
E9016-X	3/16		F	not required	F	H
E10016-X	7/32		not required	not required	not required	not required
E11016-X	1/4		F	not required	F	H
E12016-X						
E7018-X						
E8018-X						
E9018-X						
E10018-X						
E11018-X						
E12018-X						
E7020-X	1/8	(dc, straight polarity (electrode negative), and ac for horizontal fillet welds; dc, both polarities, and ac for flat position welding	not required	not required	not required	not required
	5/32		F	F	F	not required
	3/16		F	not required	F	H
	7/32		not required	not required	not required	not required
	1/4		F	not required	F	H
	5/16		F	not required	F	not required

[a] The abbreviations F, H, V, OH, and H-Fillets are defined in footnote *a* under Table I.

[b] Root bend test in V position required for 5/32-in. diameter E7010 and E7011 electrodes only. Not required for other classifications.

[c] The letter suffix "-X" as used in this table stands for the suffixes A1, B1, B2, etc. (see Table II) and designates the chemical composition of the deposited weld metal.

electrode using the positions of welding and types of current shown; all of the details of testing shall conform to the requirements of this Part II.

Material for Test Plates

18. Steel to be used for test plates for both mechanical tests and chemical analysis shall conform to one of the following specifications:

(*a*) Specification for Low and Intermediate Tensile Strength Carbon-Steel Plates of Flange and Firebox Qualities (Plates 2 in. and Under in Thickness) (ASTM Designation: A 285), grade C,

(*b*) Specification for Steel for Bridges and Buildings (ASTM Designation: A 7), open-hearth or electric-furnace steel, or

(*c*) Specification for Structural Steel for Welding (ASTM Designation: A 373).

Conditioning of Electrodes for Test

19. Electrodes shall be tested in the as-received condition, except in the case of classifications EXX15, EXX16, and EXX18. Electrodes in these classifications, if they have not been adequately protected against moisture pickup during storage, shall be heated to 500 to 700 F for a period of 1 to 3 hr immediately prior to welding.

Chemical Analysis

20. (*a*) Chemical analysis test pads shall be prepared for each size of electrode, using the types of current shown for that classification and size in Table V. All welding shall be done in the flat position.

(*b*) Weld pads shall conform to the dimensions in Table VI.

(*c*) Pads shall be deposited in layers. The width of each bead of each layer shall measure 1½ to 2½ times the diameter of the core wire. After each layer, the pad shall be immersed in water (temperature unimportant) for 30 sec.

(*d*) The top surface of the pad shall be removed and discarded and a sample sufficient for analysis shall be removed in such a manner that no metal is removed closer to the surface of the base plate than the distance shown in Table VI.

(*e*) Chemical analysis may be made by any suitable method agreed upon by the manufacturer and the purchaser. In case of dispute, the procedure in the latest edition of the Standard Methods for Chemical Analysis of Steel, Cast Iron, Open-Hearth Iron, and Wrought Iron (ASTM Designation: E 30) shall be the referee method.

TABLE VI.—WELD PAD DIMENSIONS.

Electrode Size, in.	Minimum Pad Size, in.	Minimum Distance of Sample from Surface of Base Plate, in.
3/32	1 by 1 by ½	¼
1/8, 5/32, 3/16	1½ by 1½ by 5/8	5/16
7/32, ¼, 5/16	2 by 2 by ¾	⅜

Electrode Size, in.	Full Weave for Layer No.	Split Weave		Number of Layers
		Layer No.	Passes per Layer	
5/32	1	2 to top	2	7 to 9
3/16	1 and 2	3 to top	2	6 to 8
¼, 5/16	1, 2, and 3	4 to top	2	5 to 7

NOTE 1.—Either one of the above backing strips may be used to test any diameter electrode.
NOTE 2.—Edges of the grooves and the contacting face of the backing strip shall be buttered as shown above by the electrode being tested, before welding.
NOTE 3.—Each layer shall be approximately ⅛ in. thick.

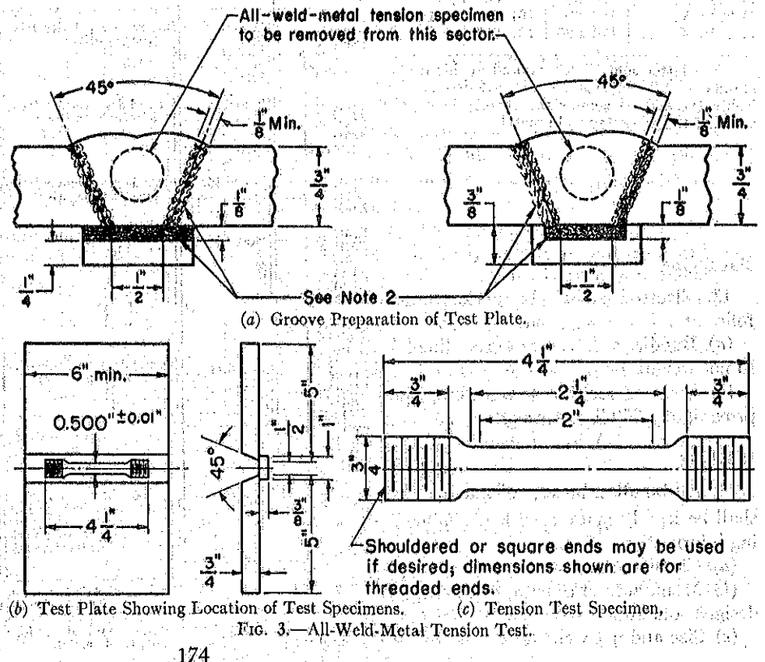

(*a*) Groove Preparation of Test Plate. (*b*) Test Plate Showing Location of Test Specimens. (*c*) Tension Test Specimen.

FIG. 3.—All-Weld-Metal Tension Test.

of asbestos during welding. After tack welding, the assembly shall be preheated to the temperature prescribed in Table VII for the classification of electrode being tested. Pass sequence shall be as shown in Fig. 3.

(*c*) After depositing each layer, the assembly shall be cooled in still air on the asbestos and shall be at the interpass temperature prescribed in Table VII for the classification of electrode being tested when welding is resumed. After the last pass, the assembly shall be allowed to cool to room temperature while still on the asbestos.

(*d*) If it is necessary to interrupt the pass sequence prescribed in Paragraph (*c*), the assembly shall be allowed to cool to room temperature on the asbestos, and the assembly shall be heated to the interpass temperature prescribed in Table VII before welding is resumed.

(*e*) The assembly shall be stress relieved according to the following schedule: the temperature of the assembly shall be raised in a suitable furnace at the rate of 300 to 350 F per hr until the temperature prescribed in Table VII for the classification of electrode being tested has been attained. This temperature shall be maintained for 1 hr. The assembly shall be cooled in the furnace at a rate of 300 to 350 F per hr. It may be removed when the temperature has reached 600 F.

(*f*) One all-weld-metal tension test specimen shall be machined from each finished test assembly as shown in Fig. 3. The specimen shall then be subjected to tension until rupture.

Longitudinal Guided-Bend Test

22. (*a*) Test assemblies, as required in Table V and as shown in Fig. 4, shall be made up using the types of current shown for each size of electrode and welding position shown. (See Fig. 1 for welding positions.) When a classification of electrode permits its use with more than one type of current (or polarity), it shall be tested using each type of current (and polarity).

(*b*) The required test plates shall be so restrained or preset that warping due to welding will not cause the finished test plate to be out of line by more than 5 deg. An assembly that has warped more than 5 deg shall be discarded. (Assemblies shall not be straightened.)

TABLE VII.—PREHEAT, INTERPASS AND STRESS RELIEF TEMPERATURES.[a]

AWS-ASTM Classification[b]	Preheat and Interpass Temperatures, deg Fahr	Stress Relief Temperature, deg Fahr
E7010-X, E7011-X, E7015-X, E7016-X, E7018-X, E7020-X, E8015-X, E8016-X, E8018-X, E9015-X, E9016-X, E9018-X, E10015-X, E10016-X, E10018-X, E11015-X, E11016-X, E11018-X, E12015-X, E12016-X, E12018-X	200 to 225[c]	1150 ± 25
E8010-X, E8011-X, E8013-X, E9010-X, E9011-X, E9013-X, E10010-X, E10011-X, E10013-X	325 to 375[c]	1150 ± 25
E8015-B2L, E8010-B2, E8011-B2, E8013-B2, E8015-B2, E8016-B2, E8018-B2		
E9015-B3L, E9015-B3, E9016-B3, E9018-B3	325 to 375	1275 ± 25
E8015-B4L, E8015-B4, E8016-B4, E8018-B4		

[a] See the fifth paragraph in the Appendix.
[b] The letter suffix "-X" as used in this table stands for the suffixes A1, B1, B2, etc., (see Table II) and designates the chemical composition of the deposited weld metal.
[c] These temperatures apply to all electrodes of the classifications shown, except electrodes of classifications EXXXX-B2, EXXXX-B3, and EXXXX-B4.

(*c*) Before welding, the assembly shall be preheated to the temperature prescribed in Table VII for the classification of electrode being tested. When welding in the vertical position is specified, the progression shall be upward. If it is necessary to interrupt welding, the assembly shall be brought to the preheat temperature before welding is resumed.

(*d*) The assemblies shall be stress relieved according to the following schedules: the temperature of the assemblies shall be raised in a suitable furnace at a rate of 300 to 350 F per hr until the temperature prescribed in Table VII for the classification of electrode being tested has been attained. This temperature shall be maintained for 1 hr. The assemblies shall then be cooled in the furnace at a rate of 300 to 350 F per hr. They may be removed when the temperature has reached 600 F.

(*e*) One longitudinal test specimen as shown in Fig. 4 shall be made from each test assembly.

(*f*) Each longitudinal specimen shall be bent in a jig having the working contour shown in Fig. 5 and otherwise substantially in accordance with Fig. 5. Any convenient means may be used for moving the plunger member with relation to the die member. The specimen shall be placed on the die member. Face-bend specimens shall be placed with the face of the weld directed toward the gap and root-bend specimens with the root of the weld directed toward the gap. The two members of the jig shall be forced together until the specimen conforms to a U-shape, and until a wire 1/32 in. in diameter cannot be placed between the specimen and any point on the curvature of the plunger member of the jig. The specimen shall then be removed from the jig and the convex surface examined.

Fillet-Weld Test

23. (*a*) Test assemblies, as required in Table V and as detailed in Table VIII and Fig. 6, shall be made up using the types of current shown for each size of electrode and welding position shown (See Fig. 2 for welding positions.) When a classification of electrode permits its

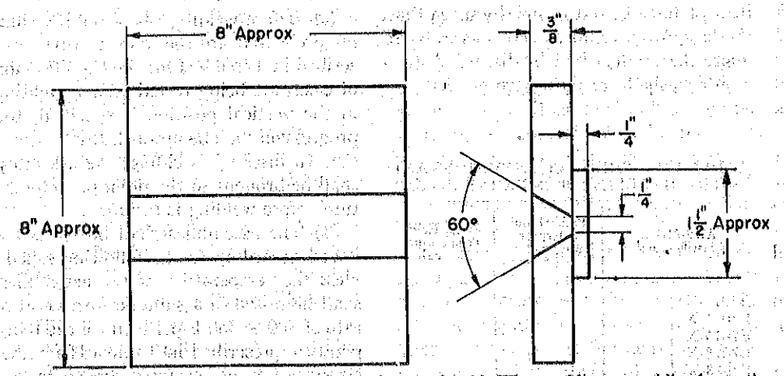

NOTE.—There shall be a minimum of three layers of weld. When welding assemblies for testing 3/16- and 1/4-in. electrodes, a 5/32-in. electrode of the same classification shall be used for the root pass. This does not apply for the root bend test of 3/16-in. diameter E7010 and E7011 electrodes, where a 3/16-in. diameter electrode shall be used for the root pass. All welding done in the vertical position shall be done vertically up.

(*a*) Test Plate.

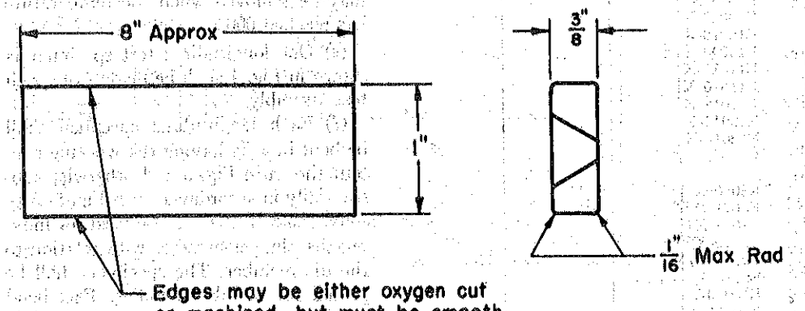

NOTE.—Weld reinforcement and backing strip shall be ground or machined smooth and flush with the surface of the specimen. Grinding or machining marks shall be parallel to the length of the longest dimension of the test specimen.

(*b*) Test Specimen.

FIG. 4.—Longitudinal Guided-Bend Test.

use with more than one type of current (or polarity), it shall be tested using each type of current (and polarity).

(*b*) In preparing the two plates forming the test assembly, the standing member shall have one edge machined throughout its length so that when it is set upon the base plate, which shall be straight and smooth, there will be intimate contact for the entire length of the joint.

(*c*) A single-pass fillet weld shall be deposited on one side of the joint. When welding in the vertical position is specified, the progression shall be upward. The first electrode used shall be consumed for its full length except for a stub end of not more than 2 in. Additional electrodes, if necessary, shall then be used to complete the weld for the full length of the joint, consuming each electrode completely as stated above, insofar as permitted by the length of the assembly.

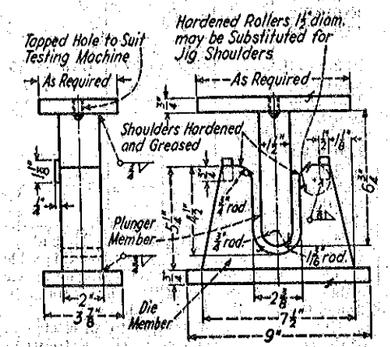

FIG. 5—Guided-Bend Test Jig.

(*d*) After completing the weld on the first side of the joint, the assembly shall be cooled to room temperature (but not less than 60 F) by any convenient means (Note) before commencing to weld on the second side.

NOTE:—If water is used as the coolant, care should be taken to ascertain that it has been thoroughly removed from the joint before welding.

(*e*) The fillet weld on the second side of the joint shall be deposited by the same procedure as was the first weld.

(*f*) The specimen shall be cut at a point approximately 1 in. back from the crater end of the deposit made with the first electrode on the first side of the joint. Either section may be polished and etched to permit examination.

(*g*) The polished and etched section shall be scribed as shown in Fig. 7 and the size, leg lengths, and convexity (of convex fillets) shall be determined to the nearest 1/64 in. by actual measurement.

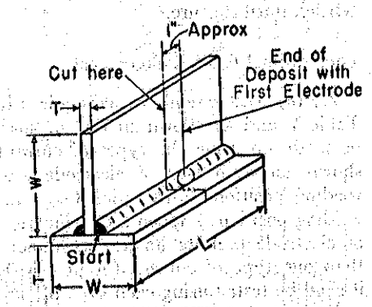

NOTE.—See Table VIII for values of *T*, *W*, and *L*.

FIG. 6.—Preparation of Fillet-Weld Test Specimen.

TABLE VIII.—REQUIREMENTS FOR PREPARATION OF FILLET-WELD TEST ASSEMBLIES.

NOTE.—Only electrodes of the diameters shown are to be tested.

AWS-ASTM Classification[a]	Diameter, in.	Plate Size, in.[b] Thickness, *T*	Width, *W*	Length, *L*	Position of Welding	Size of Fillet, in.
E7010-X, E7011-X, E8010-X, E8011-X, E9010-X, E9011-X, E10010-X, E10011-X	5/32	1/4	3	12	V	3/16 max
	3/16	3/8	3	18	V	1/4 max
	1/4	1/2	3	18	H	1/4 min
E8013-X, E9013-X, E10013-X	5/32	1/4	3	12	V	1/4 max
	3/16	3/8	3	18	V	5/16 max
E7015-X, E7016-X, E8015-X, E8016-X, E9015-X, E9016-X, E10015-X, E10016-X, E11015-X, E11016-X, E12015-X, E12016-X	5/32	3/8	3	12	V	1/4 max
	3/16	3/8	3	18	H	3/16 min
	1/4	1/2	3	18	H	5/16 min
EXX18-X	5/32	3/8	3	12	V	5/16 max
	3/16	3/8	3	18	H	1/4 min
	1/4	1/2	3	18	H	5/16 min
E7020-X	3/16	3/8	3	18	H	3/16 min
	1/4	1/2	3	18	H	5/16 min

[a] The letter suffix "-X" as used in this table stands for the suffixes A1, B1, B2, etc. (see Table II) and designates the chemical composition of the deposited weld metal.

[b] See Fig. 6.

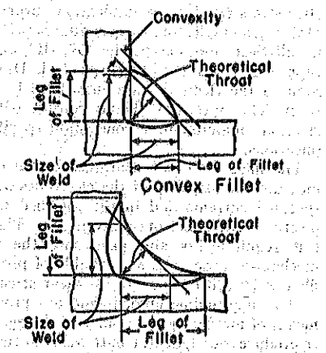

NOTE.—Size of fillet weld = Leg length of largest inscribed isosceles right triangle. Fillet weld size, convexity, and leg lengths of fillet welds shall be determined by actual measurement (to nearest 1/64 in.) on a section laid out with scribed lines as shown.

FIG. 7.—Dimensions of Fillet Welds.

APPENDIX

GUIDE TO AWS-ASTM CLASSIFICATION OF LOW-ALLOY STEEL COVERED ARC WELDING ELECTRODES

This guide is appended to the specification as a source of information; *it is not mandatory and does not form a part of the specification.*

In recent years the service requirements of low-alloy steel arc-welding electrodes have become more and more exacting. Consumers for many applications not only require low-alloy steel electrodes that will give weld metal of specific mechanical properties, but also require electrodes that will give weld metal with other specific properties. These added requirements make it imperative that the weld metal not only be up to specification mechanically but also that its chemical composition be within a specific analysis. This edition of the specification is intended to meet this demand. All electrodes are now required to meet a specific chemical analysis as well as certain mechanical properties. The specification, and therefore this guide, covers only the most frequently used low-alloy steel electrodes.

The classification system used in the specification follows the established pattern. The letter E designates an electrode; the first two digits (or three digits of a five digit number), 70 for example, designate the minimum tensile strength of the deposited metal in the stress-relieved condition in 1000 psi. The third digit (or fourth digit of a five digit number) indicates the position in which the electrode is capable of making satisfactory welds. Thus the "1", as in E7010, means that the electrode is satisfactory in all positions (flat, vertical, overhead and horizontal). The "2", as in E7020, indicates that the electrode is suitable for depositing satisfactory welds in the flat position and for making horizontal fillet welds. The last digit of the classification indicates the current to be used with the electrode and the type of covering on the electrode, as listed in Table I. In addition, a letter suffix such as A1, designates the chemical composition of the deposited weld metal (see Table II). Thus a complete classification of an electrode would be E7010-A1, E8015-C2, etc.

Note that the specific chemical compositions are not always identified with specific mechanical properties in the specification. However, a manufacturer is required by the specification to include the mechanical properties appropriate for a particular electrode in classification of that electrode. Thus a complete designation is E8015-C2; EXX15-C2 is not a complete classification.

The conventional all-weld-metal tension test has been prescribed in order to measure the ultimate strength and ductility of the weld metal

after stress relief. For specification purposes, an 1150 F stress relieving temperature is prescribed for all electrodes, except the -B2, -B3, and -B4 type, for which 1275 F is specified. However, some of the electrodes are embrittled by stress relief. The purchaser should consult with the electrode manufacturer concerning specific applications.

The fillet weld test continues to be used to measure the usability of the electrodes with the specified currents and in the specified welding positions. Any electrodes meeting the fillet-weld test requirements and possessing the proper mechanical properties are capable of producing fillet welds with the requisite shear strength.

The longitudinal guided-bend test provides a means of measuring the ability of the electrodes to produce sound, ductile butt welds in the specified positions. Since it is virtually impossible to secure base metals of proper dimensions having the same strength and composition as that of the electrodes to be tested, this specification provides that the bend test be conducted on mild steel. The low yield strength of the base metal as compared with that of the low-alloy steel weld metal makes it impossible to use the conventional transverse guided-bend test, since most of the deformation would occur in the weak zones adjacent to the weld. The longitudinal guided-bend test, however, provides a uniform deformation of the weld metal and permits evaluation of the soundness (cracks or other surface defects) and bend ductility of the joints.

The coverings of the EXX15, EXX16 and EXX18 electrodes may absorb moisture during storage. If necessary, to lower the moisture content prior to use in production, some electrodes require a baking temperature as high as 700 F and a period of time as long as 1 to 3 hr. The manner in which the electrodes have been produced and the relative humidity and temperature conditions under which the electrodes are stored determine the proper length of time and temperature to be used for reconditioning. The manufacturer should be requested to furnish the proper length of time and temperature for this purpose.

The steels commonly welded with low-alloy steel electrodes are usually used for specific purposes. The welding of these steels requires an understanding of their properties and heat-treatment beyond that which could be covered in an appendix to a filler metal specification. Therefore, the usual sections of this guide dealing with usability of low-alloy steel electrodes have not been included. Users not familiar with the characteristics of low-alloy steels are referred to the *Welding Handbook*, Third Edition[6] and other publications on low-alloy steels.

[6] Published by the American Welding Society.

SPECIFICATION FOR ALLOY-STEEL BOLTING MATERIALS FOR LOW-TEMPERATURE SERVICE

SA-320

(IDENTICAL WITH ASTM SPECIFICATION A 320-59T)

Scope

1. (*a*) These specifications cover alloy-steel bolting materials for pressure vessels, valves, flanges, and fittings for low-temperature service. The term "bolting material" as used in these specifications covers rolled, forged, or strain hardened bars, bolts, screws, studs, and stud bolts.

(*b*) Nine grades are covered, including both ferritic and austenitic steels designated L7, B8, etc. Selection will depend on design, service conditions, mechanical properties, and low-temperature characteristics (Note).

NOTE.—The committee formulating these specifications has included nine grades of material that have been rather extensively used for the present purpose. Upon agreement between the manufacturer and the purchaser, other grades of material may be employed, provided they otherwise conform to the requirements of these specifications. Other compositions will be considered for inclusion by the committee from time to time as the need becomes apparent.

(*c*) Nuts and washers for use with this bolting material are covered in Section 14.

Process

2. The steel shall be made by one or both of the following processes: open-hearth or electric-furnace.

Discard

3. A sufficient discard shall be made from each ingot to secure freedom from injurious piping and undue segregation.

Heat Treatment

4. (*a*) The bolting material shall be allowed to cool to room temperature after rolling or forging. Grades L7, L9, and L43 shall be reheated to above the upper critical temperature and quenched and tempered. Grade L10 shall be reheated to above the upper critical temperature and normalized. Grades B8, B8C, B8D, B8T, and B8F shall be annealed by reheating to a proper temperature and rapidly cooling.

(*b*) Where increased mechanical properties are desirable, the austenitic bolting materials may be strain hardened after annealing.

Chemical Composition

5. Each alloy shall conform to the requirements as to chemical composition prescribed in Table I, or to other chemical requirements as specified in the order.

Ladle Analysis

6. An analysis of each heat of steel shall be made by the manufacturer to determine the percentages of the elements specified in Section 5. This analysis shall be made from a test ingot taken during the pouring of the heat. The chemical composition thus determined shall be reported to the purchaser or his representative, and shall conform to the requirements specified in Section 5.

Check Analysis

7. An analysis may be made by the purchaser from samples representing the bolting material. The chemical composition thus determined shall conform to the requirements specified in Section 5.

Tensile Properties

8. (*a*) The material shall conform to the requirements as to tensile properties prescribed in Table II at room temperature after heat treatment.

(*b*) The yield point shall be determined by the drop of the beam or other approved method, as described in Section 7 (*f*) (*1*), (*2*), or (*3*) of Methods A 370. The speed of testing shall not exceed $\frac{1}{8}$ in. per min of crosshead speed. Where a definite yield point is not exhibited, the yield strength corresponding to a limiting permanent offset of 0.2 per cent of the gage length of the specimen shall be used as described in Section 7 (*g*) (*1*) of the Methods and Definitions for Mechanical Testing of Steel Products, ASTM Designation A 370. The tensile strength shall be determined at a maximum crosshead speed of $1\frac{1}{2}$ in. per min.

Impact Properties

9. (*a*) Material of grades L7, L9, L10, and L43 shall show a minimum impact strength of 15 ft-lb at the test temperature. The minimum impact strength shall be determined by averaging the values of three test specimens, with not more than one value being below 15 ft-lb, but in no case below 10 ft-lb. Impact tests are not required for grades B8, B8C, and B8T for temperatures above −325 F. The specimens shall be cooled a sufficient time in a suitable container so that they reach the desired temperature as measured by thermocouples, thermometers, or other suitable devices, and shall be controlled within ±3 F. The specimens shall be quickly transferred from the cooling device to the anvil of the Charpy impact testing machine and broken with a time lapse of not more than 5 sec.

(*b*) The testing temperature shall be at least as low as that specified in Table III, but the supplier at his option may present data showing compliance at any

TABLE I.—CHEMICAL REQUIREMENTS.

Type	Ferritic Steels							
Identification Symbol	L7		L9		L10		L43	
Grade	Chromium-Molybdenum (AISI 4140, 4142, or 4145)		Nickel		Nickel (AISI 2317)		Nickel-Chromium-Molybdenum (AISI 4340)	
	Range	Check Variation, Over or Under[a]	Range	Check Variation Over or Under[a]	Range	Check Variation, Over or Under[a]	Range	Check Variation, Over or Under[a]
Carbon, per cent	0.38 to 0.48[b]	0.02	0.36 to 0.44	0.02	0.15 to 0.20	0.01	0.38 to 0.43	0.02
Manganese, per cent	0.75 to 1.00	0.04	0.65 to 0.95	0.03	0.40 to 0.60	0.03	0.60 to 0.85	0.03
Phosphorus, max, per cent	0.040	0.005 over	0.040	0.005 over	0.040	0.005 over	0.040	0.005 over
Sulfur, max, per cent	0.040	0.005 over	0.040	0.005 over	0.040	0.005 over	0.040	0.005 over
Silicon, per cent	0.20 to 0.35	0.02	0.20 to 0.35	0.02	0.20 to 0.35	0.02	0.20 to 0.35	0.02
Nickel, per cent	...	...	3.25 to 3.75	0.07	3.25 to 3.75	0.07	1.65 to 2.00	0.05
Chromium, per cent	0.80 to 1.10	0.05	...	...	...	...	0.70 to 0.90	0.03
Molybdenum, per cent	0.15 to 0.25	0.02	...	...	...	...	0.20 to 0.30	0.02

Type	Austenitic Steels					
Identification Symbol	B8		B8C		B8D	
Grade	Unstabilized 18 Chromium-8 Nickel (AISI Type 304)		Stabilized 18 Chromium-8 Nickel (AISI Type 347)		Stabilized 18 Chromium-8 Nickel (AISI Type 348)	
	Range	Check Variation, Over or Under[a]	Range	Check Variation, Over or Under[a]	Range	Check Variation, Over or Under[a]
Carbon, max, per cent	0.08	0.01 over	0.08	0.01 over	0.08	0.01 over
Manganese, max, per cent	2.00	0.04 over	2.00	0.04 over	2.00	0.04 over
Phosphorus, max, per cent	0.045	0.010 over	0.045	0.010 over	0.045	0.010 over
Sulfur, max, per cent	0.030	0.005 over	0.030	0.005 over	0.030	0.005 over
Silicon, max, per cent	1.00	0.05 over	1.00	0.05 over	1.00	0.05 over
Nickel, per cent	8.00 to 12.00	0.15	9.00 to 13.00	0.15	9.00 to 13.00	0.15
Chromium, per cent	18.00 to 20.00	0.20	17.00 to 19.00	0.20	17.00 to 19.00	0.20
Columbium plus tantalum, per cent	...	...	10 x carbon content, min	0.05 under	10 x carbon content, min	0.05 under
Tantalum, per cent	...	...	...	...	0.10 max	...

TABLE I.—(*Continued*).

Type	Austenitic Steels					
Identification Symbol	B8T		B8F			
Grade	Stabilized 18 Chromium-8 Nickel (AISI Type 321)		Free Machining 18 Chromium-8 Nickel (AISI Type 303 or Type 303 Se)			
			With Added Sulfur (Type 303)		With Added Selenium (Type 303 Se)	
	Range	Check Variation, Over or Under[a]	Range	Check Variation, Over or Under[a]	Range	Check Variation, Over or Under[a]
Carbon, max, per cent	0.08	0.01 over	0.15	0.01 over	0.15	0.01 over
Manganese, max, per cent	2.00	0.04 over	2.00	0.04 over	2.00	0.04 over
Phosphorus, max, per cent	0.045	0.010 over	0.20	0.010 over	0.20	0.010 over
Sulfur, max, per cent	0.030	0.005 over	0.15 min	0.010 under	0.06	0.010 over
Silicon, max, per cent	1.00	0.05 over	1.00	0.05 over	1.00	0.05 over
Nickel, per cent	9.00 to 12.00	0.15	8.00 to 10.00	0.10	8.00 to 10.00	0.10
Chromium, per cent	17.00 to 19.00	0.20	17.00 to 19.00	0.20	17.00 to 19.00	0.20
Molybdenum, per cent	...	...	0.60 max[c]	0.03 over	...	...
Selenium, per cent	...	...	...	...	0.15 min	0.03 under
Titanium, per cent	5 x carbon content, min	0.05 under	...	...	...	...
Zirconium, per cent	...	...	0.60 max[c]	0.05 over	...	...

[a] Unless otherwise specified, separate determinations may vary from the specified ranges, except that elements in any heat must not vary both above and below the specified range.

[b] For bar sizes over 3½ to 4 in., inclusive, the carbon content may be 0.50 per cent, max.

[c] At manufacturer's option; reported only when intentionally added.

TABLE II.—TENSILE REQUIREMENTS.

Grade	Diameter, in.	Tensile Strength, min, psi	Yield Point, min, psi	Elongation in 2 in., min, per cent	Reduction of Area, min, per cent
L7	2½ and under	125 000	105 000	16	50
L9	2½ and under	125 000	105 000	16	50
	Over 2½ to 4, incl	105 000	80 000	20	50
L10	4 and under	70 000	40 000	25	40
L43	4 and under	125 000	105 000	16	50
B8, B8C, B8D, B8T, and B8F annealed	All diameters	75 000	30 000	35	50
B8, B8C, B8D, B8T, and B8F, strain hardened	¾ and under	125 000	100 000	12	35
	Over ¾ to 1, incl	115 000	80 000	15	35
	Over 1 to 1¼, incl	105 000	65 000	20	35
	Over 1¼ to 1½, incl	100 000	50 000	28	45

lower temperature.

TABLE III.—HIGHEST ACCEPTANCE TEST TEMPERATURE FOR IMPACT REQUIREMENT.

Grade	Highest Acceptance Test Temperature, deg Fahr
L7	−150
L10	−150
L43	−150
L9	−225

Test Specimens

10. (*a*) Tension test specimens taken from finished bolts, screws, studs, or stud bolts shall be machined to the form and dimensions and shall be taken from positions shown in Section F 2, Paragraph (*d*) of Methods A 370. Tension test specimens from bar stock are covered by Section 5 (*b*) (*2*), (*3*), and (*4*).

(*b*) The impact test specimens shall be tested in accordance with Sections 12 to 14, inclusive, of Methods A 370 using the Charpy keyhole impact specimens described in Fig. 12 or the Charpy U-notch impact specimens described in Fig. 13 of Methods A 370.

(*c*) For sections 1 in. or less in diameter, the test specimens shall be taken at the axis; for sections over 1 to 2 in. in diameter, midway between the axis and the surface; and for sections over 2 in. in diameter, one-quarter of the radius below the surface.

(*d*) The impact test shall be prepared with the notch located on the test specimen surface which is closest to the outside of the section, and parallel to a tangent to the section surface.

Number of Tests

11. (*a*) For heat-treated bars, one tension test and one impact test consisting of three specimens shall be made for each diameter of each heat represented in each tempering charge. In the continuous type treatment, a charge shall be defined as 6000 lb.

(*b*) For studs, bolts, screws, etc., one tension test and three impact tests shall be made for each diameter of each heat involved in the lot. Each lot shall consist of the following:

Diameter, in.	Lot Size
1⅛ and under	1500 lb or fraction thereof
Over 1⅛ to 1¾, incl.	4500 lb or fraction thereof
Over 1¾ to 2½, incl.	6000 lb or fraction thereof
Over 2½	100 pieces or fraction thereof

(*c*) Tension and impact tests are not required to be made on bolts, screws, studs, or stud bolts which are fabricated from heat-treated bars furnished in accordance with the requirements of these specifications and tested in accordance with Paragraph (*a*), provided they are not given a subsequent heat treatment.

Retests

12. If the results of the mechanical tests of any test lot do not conform to the requirements specified, the manufacturer may re-treat such lot not more than twice, in which case two additional tension tests and three additional impact tests shall be made from such lot, all of which shall conform to the requirements specified.

Finish

13. (*a*) Bolts, screws, studs, and stud bolts shall be pointed and shall have a workmanlike finish.

(*b*) Standard permissible variations for dimensions of bars shall be as prescribed in Table IV.

(*c*) Headed bolts shall be semifinished, hexagonal in shape, and in accordance with the dimensions for the regular or heavy series, as required, of the American Standard for Square and Hexagon Bolts and Nuts (ASA No. B 18.2 – 1960). Unless otherwise specified, the American Standard heavy hexagon series shall be used.

Nuts and Washers

14. (*a*) Bolts, studs, and stud bolts of grades L7, L10, and L43 shall be equipped with ferritic alloy nuts conforming to grade 4 of the Specifications for Carbon and Alloy Steel Nuts for Bolts for High-Pressure and High-Temperature Service (ASTM Designation: A 194), or a grade of steel similar to the studs, or other ferritic alloys agreed upon. When specified by the purchaser, these nuts shall be subject to the impact requirements of these specifications; impact tests shall be made on test specimens taken from the bar or plate from the heat of steel used for manufacturing the nuts, and heat-treated with the nut blanks.

(*b*) Bolts, studs, and stud bolts of grades B8, B8C, B8D, B8T, and B8F shall be equipped with austenitic alloy nuts conforming to grades 8, 8C, 8D, 8T, and 8F of Specifications A 194. Impact tests are not required on the austenitic alloy steels (except grade 8F) for temperatures above −325 F. When specified by the purchaser, grade 8F nuts shall be subject to the impact requirements of these specifications; impact tests shall be made on test specimens taken from the bar or plate from the heat of steel used for manufacturing the nuts, and heat-treated with the nut blanks.

(*c*) Bolts, studs, and stud bolts of grade L9 shall be furnished with nuts conforming to grade 4 of Specifications A 194, or a grade of steel similar to the studs, or other ferritic alloys as agreed upon. If the purchaser requires nuts with a Charpy impact strength of not less than 15 ft-lb at temperatures below −150 F, he may require that the nuts conform to grades 8, 8C, 8D, 8T, or 8F of Specifications A 194.

(*d*) If washers are used under nuts, they shall be of forged or rolled steel. All washers shall be free from injurious defects and shall have a workmanlike finish.

TABLE IV.—PERMISSIBLE VARIATIONS IN SIZE OF HOT-ROLLED BARS.

Specified Size, in.	Permissible Variations from Specified Size, in.		Out-of-Round, in.
	Over	Under	
5/16 and under	0.005	0.005	0.008
Over 5/16 to 7/16, incl.	0.006	0.006	0.009
Over 7/16 to 5/8, incl.	0.007	0.007	0.010
Over 5/8 to 7/8, incl.	0.008	0.008	0.012
Over 7/8 to 1, incl.	0.009	0.009	0.013
Over 1 to 1⅛, incl.	0.010	0.010	0.015
Over 1⅛ to 1¼, incl.	0.011	0.011	0.016
Over 1¼ to 1⅜, incl.	0.012	0.012	0.018
Over 1⅜ to 1½, incl.	0.014	0.014	0.021
Over 1½ to 2, incl.	1/64	1/64	0.023
Over 2 to 2½, incl.	1/32	0	0.023

Threads

15. (*a*) All alloy-steel bolts, studs, stud bolts, unless otherwise specified, shall be threaded in accordance with the American Standard for Screw Threads (ASA No. B1.1 – 1960) Class 2A fit, sizes 1 in. and smaller in diameter with the Coarse Thread Series, and 1⅛ in. and larger in diameter with the 8 Pitch Thread Series.

(*b*) Where practical, all threads shall be formed after heat-treatment.

Marking

16. The serial marking for identification of material and the manufacturer's identification mark shall be stamped on the top of the head of bolts and screws, and on one end of studs and stud bolts. The identification symbol shall be as shown in Table I.

Inspection

17. (*a*) The inspector representing the purchaser shall have free entry, at all times while work on the contract of the purchaser is being performed, to all parts of the manufacturer's works that concern the manufacture of the material ordered. The manufacturer shall afford the inspector, without charge, all reasonable facilities to satisfy him that the material is being furnished in accordance with these specifications. All tests (except check analysis) and inspection shall be made at the place of manufacture prior to shipment, unless otherwise specified, and shall be so conducted as not to interfere unnecessarily with the operation of the works.

(*b*) *Certification.*—When agreed upon in writing between the manufacturer and the purchaser, a certification that the material conforms to the requirements of these specifications shall be the basis of acceptance of the material. Otherwise, the manufacturer shall report to the purchaser or his representative the results of the chemical analyses and mechanical tests made in accordance with these specifications.

Rejection

18. (*a*) Unless otherwise specified, any rejection based on tests made in accordance with Section 7 shall be reported to the manufacturer within five working days from the receipt of samples by the purchaser.

(*b*) Material that shows injurious defects subsequent to its acceptance at the manufacturer's works shall be rejected, and the manufacturer shall be notified.

Rehearing

19. Samples tested in accordance with Section 7 that represent rejected material shall be preserved for two weeks from the date of the test report. In case of dissatisfaction with the results of the tests, the manufacturer may make claim for a rehearing within that time.

SPECIFICATION FOR QUENCHED AND TEMPERED STEEL BOLTS AND STUDS WITH SUITABLE NUTS AND PLAIN HARDENED WASHERS

SA-325

(IDENTICAL WITH ASTM SPECIFICATION A 325-58T)

Scope

1. This specification covers the chemical and mechanical requirements of quenched and tempered steel bolts and studs, 3 in. and under in diameter, usually furnished in National Coarse and 8 Thread Series, and usually made of medium carbon steel and for applications where high strength is required. Suitable nuts and plain hardened washers also are covered by this specification.

Materials and Manufacture

2. (*a*) Steel for bolts and studs shall be made by the open hearth or electric furnace process.

(*b*) Steel for nuts shall be made by the open hearth, electric furnace, or bessemer process.

(*c*) Steel for washers shall be made by the open hearth or electric furnace process.

(*d*) Bolts or studs shall be heat treated by quenching in a liquid medium from above the transformation temperature and then tempering by reheating to a minimum temperature of 800 F.

(*e*) Threads of bolts or studs may be cut or rolled.

(*f*) Nuts need not be heat treated.

(*g*) Washers shall be either quenched and tempered, or carburized, quenched and tempered.

Chemical Requirements

3. (*a*) Bolts, studs, nuts, and washers shall conform to the chemical requirements prescribed in Table I.

(*b*) Check analyses may be made by the purchaser from finished material representing each lot of bolts, nuts or washers. The chemical composition thus determined shall conform to the requirements prescribed in Paragraph (*a*), except that resulfurized material is not subject to rejection based on check analysis for sulfur.

TABLE I.—CHEMICAL REQUIREMENTS.

Element	Bolts	Nuts	Washers	
			Carburized	Quenched and Tempered
Carbon, per cent	0.30 min	...	[a]	...
Manganese, per cent	0.30 min	...	1.00 max	...
Phosphorus, per cent	0.048 max	0.13 max	0.048 max	0.048 max
Sulfur, per cent	0.058 max	0.23 max	0.058 max	0.058 max

[a] The stock used for manufacture of carburized washers shall not contain over 0.25 per cent, max, carbon.

Mechanical Requirements

4. (*a*) Bolts or studs shall meet the hardness requirements specified in Table II. This shall be the only requirement for bolts which are too short or which have insufficient threads for tension testing or which have drilled or undersize heads which are weaker than the threaded section of the bolt.

(*b*) Bolts or studs, other than those excepted in Paragraph (*a*), shall be subject to a tension test as specified in Section 6. Where both hardness and tension tests are performed, acceptance on the basis of the tensile requirements shall take precedence where the minimum requirements are the subject of controversy.

(*c*) Bolts or studs 1⅛ in. and under in diameter shall meet the requirements for proof load or yield strength and tensile strength as specified in Table III in *full size*.

(*d*) Bolts 1¼ to 3 in. in diameter, incl, shall preferably meet the requirements for proof load or yield strength and tensile strength as specified in Table III in *full size* but when equipment of sufficient capacity for such tests is not available they shall meet the requirements for machined specimens specified in Table IV.

(*e*) Nuts shall meet the hardness requirements specified in Table V or VI. Hardness shall be the only requirement for jam, slotted and castellated nuts and for nuts larger than 1½ in. in size.

(*f*) Nuts 1⅛ in. and under in size shall meet the proof load of nuts specified in Table V or VI.

(*g*) Nuts 1¼ to 1½ in. in size shall preferably meet the requirements for proof load as specified in Table V or VI but when equipment of sufficient capacity for such tests is not available they shall meet the hardness requirements as specified in Table V or VI.

(*h*) Carburized washers shall have hardness of 68 to 75 Rockwell A and shall be carburized to a minimum depth of 0.015 in.

(*i*) Quenched and tempered (non-carburized) washers shall have a hardness of 35 to 45 Rockwell C.

TABLE II.—HARDNESS REQUIREMENTS FOR *FULL SIZE* BOLTS AND STUDS.

Bolt Size, in.	Hardness			
	Brinell		Rockwell C	
	Min	Max	Min	Max
¼ to ¾, incl	241	302	23	32
⅞ to 1, incl	235	302	22	32
1⅛ to 1½, incl	223	285	19	30
1¾ to 3, incl	183	235	...	...

Dimensions

5. Unless otherwise specified, threads shall be the Coarse Thread Series as specified in the latest issue of the American Standard for Screw Threads (ASA No.: B1.1), having a class 2A tolerance for bolts and class 2B tolerance for nuts, or at the option of the manufacturer, class 2 tolerance for both bolts and nuts.

Methods of Test

6. (*a*) Method of tests shall be in accordance with Supplement III of the Methods and Definitions for Mechanical Testing of Steel Products (ASTM Designation: A 370).

(*b*) Proof load rather than yield strength determination is preferred and shall be the arbitration method.

(*c*) Square and hexagon bolts shall be tested by the wedge tension method. Fracture shall be in the body or threads of the bolt without any fracture at the junction of the head and body.

(*d*) Studs and bolts other than covered in Paragraph (*c*) shall be tested by the axial tension method.

(*e*) The speed of testing as determined with a free running cross head shall be a maximum of ⅛ in. per min for the bolt proof load determination and a maximum of 1 in. per min for the bolt tensile strength determination and nut proof load determination.

Number of Tests and Retests

7. (*a*) The requirements of this specification are requirements to be met in continuous mass production for stock during which the manufacturer has made such sample inspections as to insure normally that the material is controlled within the specified limits. Additional tests of individual shipments of material are not ordinarily contemplated.

(*b*) When additional tests are specified on the purchase order, a lot, for purposes of selecting test samples shall consist of all material offered for inspection at one

TABLE III.—TENSILE REQUIREMENTS FOR *FULL SIZE* BOLTS AND STUDS.

Bolt Size, in.	Threads per Inch[a]	Stress Area, sq in.[b]	Tensile Strength, min, lb[c]	Proof Load, min, lb[d]	Yield Strength (0.2 per cent offset), min, lb[e]
1	2	3	4	5	6
¼	20	0.0318	8 800	2 700	2 800
5/16	18	0.0524	6 300	4 450	4 600
⅜	16	0.0775	9 300	6 600	6 800
7/16	14	0.1063	12 750	9 050	9 350
½	13	0.1419	17 050	12 050	12 500
9/16	12	0.182	21 850	15 450	16 000
⅝	11	0.226	27 100	19 200	19 900
¾	10	0.334	40 100	28 400	29 400
⅞	9	0.462	53 150	36 050	37 400
1	8	0.606	69 700	47 250	49 100
1⅛	7	0.763	80 100	56 450	58 750
1¼	7	0.969	101 750	71 700	74 600
1⅜	6	1.155	121 300	85 450	88 950
1½	6	1.405	147 550	103 950	108 200
1¾	5	1.90	171 000	104 500	...
2	4½	2.50	225 000	137 500	...
2¼	4½	3.25	292 500	178 750	...
2½	4	4.0	360 000	220 000	...
2¾	4	4.93	443 700	271 150	...
3	4	5.97	537 300	328 350	...

[a] For 8 threads per inch in sizes 1⅛ to 1½ in., incl, a tensile strength of 105,000 psi and a proof load of 74,000 psi shall be used for calculating the loads for columns 4 and 5.

[b] Stress area calculated from the formula:

$$A_s = 0.7854\left(D - \frac{0.9743}{n}\right)^2$$

where A_s = stress area, D = nominal diameter, and n = threads per inch.

[c] Based on 120,000 psi for sizes ¼ to ¾ in., incl; 115,000 psi for sizes ⅞ to 1 in., incl; 105,000 psi for sizes 1⅛ to 1½ in., incl; and 90,000 psi for sizes 1¾ to 3 in., incl.

[d] Based on 85,000 psi for sizes ¼ to ¾ in., incl; 78,000 psi for sizes ⅞ to 1 in. incl; 74,000 psi for sizes 1⅛ to 1½ in., incl; and 55,000 psi for sizes 1¾ to 3 in., incl.

[e] Based on 88,000 psi for sizes ¼ to ¾ in., incl; 81,000 psi for sizes ⅞ to 1 in., incl; and 77,000 psi for sizes 1⅛ to 1½ in., incl.

TABLE IV.—TENSILE REQUIREMENTS FOR SPECIMENS MACHINED FROM BOLTS AND STUDS.

Bolt Size, in.	Tensile Strength, min, psi	Yield Strength (0.2 per cent offset), min, psi	Elongation in 2 in., min, per cent	Reduction of Area, min, per cent
1	2	3	4	5
1¼ to 1½, incl	105 000	77 000	14	35
Over 1½ to 3, incl	90 000	55 000	14	35

TABLE V.—PROOF LOAD AND HARDNESS REQUIREMENTS FOR NUTS, EXCEPT HEAVY HEXAGON SERIES, COARSE THREADS (SEE TABLE VI).

Nut Size, in.	Threads per Inch	Proof Load, min, lb[a]	Brinell Hardness, min
¼	20	3 800	...
5/16	18	6 300	...
⅜	16	9 300	...
7/16	14	12 750	...
½	13	17 050	...
9/16	12	21 850	...
⅝	11	27 100	...
¾	10	40 100	...
⅞	9	53 150	...
1	8	69 700	...
1⅛	7	80 000	...
1¼	7	101 750	121
1⅜	6	121 300	121
1½	6	147 550	121
1¾ to 3, incl	...	...	121

[a] Based on 120,000 psi for sizes ¼ to ¾ in., incl; 115,000 psi for sizes ⅞ to 1 in., incl; and 105,000 for sizes 1⅛ to 1½ in., incl.

TABLE VI.—PROOF LOAD AND HARDNESS REQUIREMENTS FOR NUTS, HEAVY HEXAGON SERIES, COARSE THREADS ONLY.

Nut Size, in.	Threads per Inch	Proof Load, min, lb[a]	Brinell Hardness, min
¼	20	4 600	...
5/16	18	7 550	...
⅜	16	11 150	...
7/16	14	15 300	...
½	13	20 450	...
9/16	12	26 200	...
⅝	11	32 550	...
¾	10	48 100	...
⅞	9	66 550	...
1	8	87 250	...
1⅛	7	109 900	...
1¼	6	139 550	143
1⅜	6	166 300	143
1½	6	202 300	143
1¾ to 3 incl.	...	...	131

[a] Based on 144,000 psi for sizes up to 1½ in., incl, and 120,000 psi for sizes from 1¾ to 3 in., incl.

time that has the following common characteristics:

(*1*) One type of item, that is bolts, nuts, washers or studs,

(*2*) One nominal size, and

(*3*) One nominal length of bolts.

(*c*) From each lot, the number of tests of each required property shall be as follows:

Number of Pieces in Lot	Number of Samples
800 and under	1
801 to 8 000	2
8 001 to 22 000	3
Over 22 000	5

(*d*) If any test specimen shows defective machining it may be discarded and another specimen substituted.

(*e*) Should any sample fail to meet the requirements of a specified test, double the number of samples from the same lot shall be tested, in which case all of the additional samples shall meet the specifications.

Marking

8. Bolt heads shall be marked with three radial lines 120-deg apart and shall also be marked to identify the manufacturer. Nuts for use with bolts ordered to this specification are not required to be marked, except Heavy Hexagon, Coarse Thread Series nuts shall be marked on one face with three similar circumferential markings, 120-deg apart. Markings may be either raised or depressed at the option of the manufacturer, who may also use additional marking for his own use.

NOTE.—Heavy Hexagon Series, Coarse Thread, grade 2 nuts of the Specifications for Carbon and Alloy Steel Nuts for Bolts for High Pressure and High-Temperature Service (ASTM Designation: A 194) meet all requirements of Table VI, and may be supplied as an alternate. Such nuts are marked with the numeral 2 and the manufacturer's identification symbol.

Inspection

9. (*a*) If the inspection described in Paragraph (*b*) is required by the purchaser it shall be specified in the inquiry and contract or order.

(*b*) The inspector representing the purchaser shall have free entry, at all times while work on the contract of the purchaser is being performed, to all parts of manufacturer's works that concern the manufacture of the material ordered. The manufacturer shall afford the inspector all reasonable facilities, without charge, to satisfy him that the material is being furnished in accordance with this specification. All tests (except check analysis) and inspection shall be made at the place of manufacture prior to shipment, unless otherwise specified, and shall be so conducted as not to interfere unnecessarily with the operation of the works.

Rejection

10. Unless otherwise specified, any rejection based on tests specified herein shall be reported to the manufacturer within five working days from the receipt of samples by the purchaser.

SPECIFICATION FOR SEAMLESS AND WELDED STEEL PIPE FOR LOW-TEMPERATURE SERVICE

SA-333

(IDENTICAL WITH ASTM SPECIFICATION A 333-61T EXCEPT THAT NOTE 1 IN PARAGRAPH 1 (A) HAS BEEN DELETED)

Scope

1. (*a*) These specifications cover nominal (average) wall seamless and welded carbon and alloy steel pipe intended for use at low temperatures. Four grades of ferritic steel are included as listed in Table I.

(*b*) The grade desired shall be specified in the order.

(*c*) Other grades of less commonly used steels may be furnished to the general requirements of these specifications including notched bar impact tests, with the chemical and tensile requirements and impact test temperatures to be agreed upon by the manufacturer and the purchaser.

NOTE 2.—The committee formulating these specifications has included those grades of ferritic steels most commonly used at low temperatures when their suitability has been assured by means of notched bar impact tests. Other grades will be considered for inclusion in these specifications should the extent of their future usage warrant standardization.

Process

2. The steel shall be made by either or both of the following processes: open-hearth or electric-furnace. The steels shall be made using recognized melting practices necessary to produce steel which will meet the impact requirements of these specifications.

Discard

3. A sufficient discard shall be made from each ingot to secure freedom from injurious piping and undue segregation.

Manufacture

4. The pipe shall be made by the seamless or welding process with the addition of no filler metal in the welding operation. Grade 4 shall be seamless pipe.

TABLE I.—STRESS RELIEVING OF TEST PIECES.

Metal Temperature, deg Fahr[a]		Minimum Holding Time, hr per in. of Thickness
Grades 0, 3 and 5	Grade 4[b]	
1100	1150	1
1050	1100	2
1000	1050	3

[a] For intermediate temperatures, the holding time shall be determined by straight-line interpolation.

[b] Unless otherwise specified grade 4 shall be stress relieved at 1150 F.

TABLE II.—CHEMICAL REQUIREMENTS.

	Grade 0	Grade 3	Grade 4	Grade 5
Carbon, max, per cent	0.30	0.19	0.12	0.19
Manganese, per cent	0.40 to 1.06	0.31 to 0.64	0.50 to 1.05	0.20 to 0.64
Phosphorus, max, per cent	0.05	0.05	0.04	0.05
Sulfur, max, per cent	0.06	0.05	0.04	0.05
Silicon, per cent	...	0.18 to 0.37	0.08 to 0.37	0.18 to 0.37
Nickel, per cent	...	3.18 to 3.82	0.47 to 0.98	4.68 to 5.32
Chromium, per cent	...	...	0.44 to 1.01	...
Copper, per cent	...	...	0.40 to 0.75	...
Aluminum, per cent	...	...	0.04 to 0.30	...

Heat Treatment

5. (*a*) All pipe shall be furnished in the normalized or normalized and tempered condition, except when otherwise agreed upon by the manufacturer and the purchaser.

(*b*) Material from which test specimens are obtained shall be in the same condition of heat treatment as the pipe furnished. Material from which specimens are to be taken shall be heat treated prior to preparation of the specimens.

(*c*) When the vessel or piping system in which the pipe is to be used is to be stress-relieved after fabrication by welding, the order shall specify that the test specimens shall be taken from full thickness test pieces which have been stress-relieved after having been removed from the heat-treated pipe. The test pieces shall be gradually and uniformly heated to the prescribed temperature, held at that temperature for a period of time in accordance with Table I, and the furnace cooled to a temperature not exceeding 600 F.

Chemical Composition

6. The steel shall conform to the chemical requirements prescribed in Table II.

Ladle Analysis

7. An analysis of each heat of steel shall be made by the steel manufacturer to determine the percentages of the elements specified in Table II. The chemical composition thus determined, or that determined from a check analysis made by the pipe manufacturer, if the latter has not manufactured the steel, shall be reported to the purchaser or his repre-

sentative, and shall conform to the requirements specified in Table II.

Check Analysis

8. (*a*) At the request of the purchaser, an analysis of one billet or two samples of flat rolled stock from each heat or of two pipes from each lot[4] shall be made by the manufacturer. A lot of pipe shall consist of the following:

Nominal Diameter, in.	Lengths of Pipe in Lot
Under 2	400 or fraction thereof
2 to 6, incl.	200 or fraction thereof
Over 6	100 or fraction thereof

(*b*) Samples for chemical analysis, except for spectrochemical analysis, shall be taken in accordance with the Method of Sampling Steel, Cast Iron, Open-Hearth Iron, and Wrought Iron for Determination of Chemical Composition (ASTM Designation: E 59). The results of these analyses shall be reported to the purchaser or his representative, and shall conform to the requirements specified in Table II.

(*c*) If the analysis of one of the tests specified in Paragraph (*a*) does not conform to the requirements specified in Table II, an analysis of each billet or pipe from the same heat or lot may be made, and all billets or pipe conforming to the requirements shall be accepted.

Tensile Properties

9. (*a*) The material shall conform to the requirements as to tensile properties at room temperature prescribed in Table III.

(*b*) The yield point shall be determined by the drop of the beam or halt in the gage of the testing machine, or by the use of dividers or other approved method. When a definite yield point is not exhibited, the yield strength corresponding to a permanent offset of 0.2 per cent of the gage length of the specimen, or to a total extension of 0.5 per cent of the gage length under load shall be determined.

Bending Properties

10. For pipe 2 in. and under in nominal diameter, a sufficient length of pipe shall stand being bent at room temperature through 90 deg around a cylindrical mandrel, the diameter of which is twelve times the outside diameter of the pipe, without developing cracks. When grades O, 3 or 5 are ordered for close coiling, the pipe shall stand being bent at room temperature through 180 deg around a cylindrical mandrel, the diameter of which is eight times the outside diameter of the pipe, without failure.

Flattening Test

11. (*a*) The flattening test shall be made on pipe over 2 in. in nominal diameter.

(*b*) *Seamless Pipe.*—A section of seamless pipe not less than 2½ in. in length shall be flattened cold between parallel plates in two steps. During the first step, which is a test for ductility, no cracks or breaks on the inside, outside or end surfaces shall occur until the distance between the plates is less than the value of "H" calculated by the following formula.

$$H = \frac{(1 + e)t}{e + t/D}$$

where:

H = distance between flattening plates in inches,
t = nominal wall thickness of pipe in inches,
D = actual outside diameter of pipe in inches, and
e = deformation per unit length (constant for a given grade of steel, 0.08 for ferritic steels).

During the second step, which is a test for soundness, the flattening shall be continued until the specimen breaks or the opposite walls of the pipe meet. Evidence of laminated or unsound material that is revealed during the entire flattening test shall be cause for rejection.

(*c*) *Welded Pipe.*—For welded pipe a section of pipe not less than 4 in. in length shall be flattened cold between parallel plates in three steps. The weld shall be placed 90 deg from the direction of the applied force. During the first step, which is a test for ductility of the weld, no cracks or breaks on the inside or outside surfaces shall occur until the distance between the plates is less than two thirds of the original outside diameter of the pipe. As a second step the flattening shall be continued. During the second step, which is a test for ductility of material exclusive of the weld, no cracks or breaks on the inside, outside or end surfaces shall occur until the distance between the plates is less than one third of the original outside diameter of the pipe but is not less than five times the thickness of the pipe wall. During the third step, which is a test for soundness, the flattening shall be continued until the specimen breaks or the opposite walls of the pipe meet. Evidence of laminated or unsound material or of incomplete weld that is revealed during the entire flattening test shall be cause for rejection.

(*d*) Surface imperfections in the test specimen before flattening, but revealed during the first step of the flattening test, shall be judged in accordance with the finish requirements in Section 24.

(*e*) Superficial ruptures as a result of surface imperfections shall not be cause for rejection.

Impact Properties

12. (*a*) The notched bar impact properties of each set of three impact specimens, including specimens for the welded joint in welded pipe, when tested at temperatures in conformance with Section 13 (*a*), shall not be less than the values prescribed in Table IV (See Appendix II).

(*b*) *Retests.*—When the average value of the three specimens equals or exceeds the minimum value permitted for a single specimen and the value for more than one specimen is below the required average value or the value for one specimen is below the minimum value permitted for a single specimen, a retest of three additional specimens shall be made, each of which shall equal or exceed the required average value. When an erratic result is caused by a defective specimen, or there is uncertainty in the test procedure, a retest will be allowed.

Impact Test

13. (*a*) All material furnished under these specifications and marked in accordance with Section 25 shall be tested for impact resistance at the minimum temperature for the respective grades as follows:

Grade	Minimum Impact Test Temperature, deg Fahr
O	−50
3	−150
5	−150
4	−150

Special impact tests on individual lots of material may be made at lower temperatures if agreed upon by the manufacturer and the purchaser.

(*b*) The notched bar impact test shall be made in accordance with the procedure for the simple beam, Charpy type test of the Methods of Notched-Bar Impact Testing of Metallic Materials (ASTM Designation: E 23).

(*c*) Impact tests specified for temperatures lower than +70 F should be made with the following precautions: The impact test specimens as well as the handling tongs shall be cooled a sufficient time in a suitable container so that both reach the desired temperature. The temperature shall be measured with thermocouples, thermometers, or any other suitable devices and shall be controlled within ±3 F. The specimens shall be quickly transferred from the cooling device to the anvil of the Charpy impact testing machine and broken with a time lapse of not more than 5 sec.

[4] A lot shall consist of the number of lengths specified in Section 8, of the same size and wall thickness from any one heat of steel.

TABLE III.—TENSILE REQUIREMENTS.

	Grade O		Grades 3 and 5		Grade 4	
Tensile Strength, min, psi	55 000		65 000		60 000	
Yield Point, min, psi	30 000		35 000		35 000	
	Longitudinal	Transverse	Longitudinal	Transverse	Longitudinal	Transverse
Elongation in 2 in., min, per cent:						
Basic minimum elongation for walls 5/16 in. and over in thickness, strip tests, and for all small sizes tested in full section	35	25	30	20	30	16.5
When standard round 2-in. gage length test specimen is used	28	20	22	14	22	12
For strip tests, a deduction for each 1/32 in. decrease in wall thickness below 5/16 in. from the basic minimum elongation of the following percentage	1.75[a]	1.25[a]	1.50[a]	1.00[a]	1.50[a]	1.00[a]

[a] The following table gives the calculated minimum values:

Wall Thickness, in.	Elongation in 2 in., min, per cent					
	Grade O		Grades 3 and 5		Grade 4	
	Longitudinal	Transverse	Longitudinal	Transverse	Longitudinal	Transverse
5/16 (0.312)	35.00	25.00	30.00	20.00	30.00	16.50
9/32 (0.281)	33.25	23.75	28.50	19.00	28.50	15.50
1/4 (0.250)	31.50	22.50	27.00	18.00	27.00	14.50
7/32 (0.219)	29.75	...	25.50	...	25.50	...
3/16 (0.188)	28.00	...	24.00	...	24.00	...
5/32 (0.156)	26.25	...	22.50	...	22.50	...
1/8 (0.125)	24.50	...	21.00	...	21.00	...
3/32 (0.094)	22.75	...	19.50	...	19.50	...
1/16 (0.062)	21.00	...	18.00	...	18.00	...

NOTE.—The above table gives the computed minimum elongation values for each 1/32-in. decrease in wall thickness. Where the wall thickness lies between two values shown above, the minimum elongation value is determined by the following formula:

Grade	Direction of Test	Formula
O	Longitudinal	$E = 56t + 17.50$
	Transverse	$E = 40t + 12.50$
3 and 5	Longitudinal	$E = 48t + 15.00$
	Transverse	$E = 32t + 10.00$
4	Longitudinal	$E = 48t + 15.00$
	Transverse	$E = 32t + 6.50$

where:
E = elongation in 2 in. in per cent, and
t = actual thickness of specimen, in inches.

TABLE IV.—IMPACT REQUIREMENTS.

Size of Specimen, mm	Minimum Average Notched Bar Impact Value of Each Set of Three Specimens, ft-lb	Minimum Notched Bar Impact Value of One Specimen Only of a Set, ft-lb
10 by 10	15	10
10 by 7.5	12.5	8.5
10 by 5	10	7.0
10 by 2.5	5	3.5

Hydrostatic Test

14. (*a*) Unless otherwise agreed upon between the manufacturer and the purchaser, each length of pipe shall be tested by the manufacturer to a hydrostatic pressure which will produce in the pipe wall a stress of 60 per cent of the minimum specified yield point at room temperature. This pressure shall be determined by the following formula:

$$P = \frac{2St}{D}$$

where:

P = minimum hydrostatic test pressure in pounds per square inch,
S = 0.6 times the minimum specified yield point at room temperature in pounds per square inch,
t = nominal wall thickness in inches, and
D = outside diameter in inches.

(*b*) The maximum hydrostatic test pressure shall not exceed 2500 psi for nominal sizes 3 in. and under, or 2800 psi for all nominal sizes over 3 in. The hydrostatic pressure shall be maintained for not less than 5 sec.

NOTE 3.—When requested by the purchaser and so stated in the order, pipe in sizes 14 in.

in nominal diameter and smaller shall be tested to one and one-half times the specified working pressure, provided the fiber stress corresponding to those test pressures does not exceed 60 per cent of the minimum specified yield point of the material as determined by the above formula. When one and one-half times the working pressure exceeds 2800 psi, the hydrostatic pressure shall be a matter of agreement between the purchaser and the manufacturer.

Specimens for Tension, Bend and Flattening Tests

15. (*a*) The test specimens and the tests required by these specifications shall conform to those described in the Methods and Definitions for the Mechanical Testing of Steel Products (ASTM Designation: A 370).

(*b*) Specimens cut either longitudinally or transversely shall be acceptable for the tension test.

(*c*) Test specimens for the bend and flattening tests shall consist of sections cut from a pipe. Specimens for flattening tests shall be smooth on the ends and free from burrs, except when made on crop ends.

Specimens for Impact Test

16. (*a*) Notched bar impact specimens shall be of the simple beam, Charpy type with either a keyhole or equivalent slot notch in accordance with ASTM Methods E 23. Standard specimens 10 by 10 mm in cross-section shall be used unless the material to be tested is of insufficient thickness, in which case the largest obtainable substandard size specimens shall be used. When the size of the finished pipe is insufficient to permit obtaining substandard size impact specimens, the specimens for notched bar impact testing shall be taken from the rounds or pipes before reducing to the final size. The material from which the specimens are taken shall be in the same condition of heat treatment as will be the finished pipes.

(*b*) Test specimens shall be obtained so that the longitudinal axis of the specimen is parallel to the longitudinal axis of the pipe while the axis of the drilled hole (or ground slot) shall be perpendicular to the surface. On wall thicknesses of 1 in. or less, the specimens shall be obtained with their axial plane located at the midpoint; on wall thicknesses over 1 in. the specimens shall be obtained with their axial plane located ½ in. from the outer surface.

(*c*) When testing welds the notch of the specimen shall be in the welded joint and where the diameter and wall thickness permits, the longitudinal axis of the specimen shall be transverse to the longitudinal axis of the pipe.

Number of Tension, Bend, Flattening and Hydrostatic Tests

17. (*a*) For material heat treated in a batch type furnace, tests shall be made as follows on 5 per cent of the pipe lengths from each treated lot,[6] Results of these tests shall be reported to the purchaser or his representative:

The transverse or longitudinal tension test specified in Section 9,

The bend test specified in Section 10 for pipe 2 in. and under in nominal diameter, and

The flattening test specified in Section 11 for pipe over 2 in. in nominal diameter.

(*b*) For material heat treated by the continuous process, the tests specified in Paragraph (*a*) shall be made on a sufficient number of pipe lengths to constitute 5 per cent of the lot, but in no case less than 2 lengths.

(*c*) If any test specimen shows defective machining or develops flaws, it may be discarded and another specimen substituted.

(*d*) If the percentage of elongation of any tension test specimen is less than that specified in Table III and any part of the fracture is more than ¾ in. from the center of the gage length, as indicated by scribe scratches marked on the specimen before testing, a retest shall be allowed. If a specimen breaks in an inside or outside surface flaw, a retest shall be allowed.

(*e*) Each length of pipe shall be subjected to the hydrostatic test specified in Section 14.

[6] The term "lot" applies to all pipe of the same nominal size and wall thickness (or schedule) which is produced from the same heat of steel and subjected to the same finishing treatment in a continuous furnace; when final heat treatment is in a batch type furnace, the lot shall include only that pipe which is heat treated in the same furnace charge. When no heat treatment is performed following final forming operations, the lot shall include hot rolled material only or cold drawn material only.

Number of Impact Tests

18. (*a*) One notched bar impact test, consisting of breaking three specimens, shall be made from each heat represented in a heat treatment load on specimens taken from the finished pipe. This test shall represent only such pipe from the same heat and the same heat treatment load, the wall thicknesses of which do not exceed by more than ½ in. the wall thicknesses of the pipe from which the test specimens are taken.

(*b*) If heat treatment is performed in continuous or batch furnaces controlled within a 50 deg Fahr range and equipped with recording pyrometers so that complete records of heat treatment are available, then one test from each heat in a continuous run only shall be required instead of one test from each heat in each heat treatment load.

(*c*) On welded pipe additional impact tests of the same number as required in Paragraphs (*a*) or (*b*) shall be made to test the weld.

(*d*) Specimens showing defects while being machined or prior to testing may be discarded and replacements shall be considered as original specimens.

Retests

19. If the results of the mechanical tests of any group or lot do not conform to the requirements specified in Sections 9, 10, 11, and 12, retests may be made on additional pipe lengths of double the original number from the same group or lot, each of which shall conform to the requirements specified.

Retreatment

20. If the results of any of the mechanical tests on any individual pipe lengths selected to represent any group or lot fail to conform to the test requirements specified in Sections 9, 10, 11, and 12, the individual pipe lengths, group, or lot may be retreated and resubmitted for test, except that any individual lengths which meet the test requirements before retreating will be acceptable.

Permissible Variations in Dimensions and Weight

21. (*a*) *Weight.*—The weight of any length of pipe in nominal sizes of 12 in. and under shall not vary more than 6.5 per cent over and 3.5 per cent under that specified. For nominal sizes over 12 in. the weight of any length shall not vary more than 10 per cent over and 5 per cent under that specified. Unless otherwise agreed upon between the manufacturer and the purchaser, pipe in sizes 4 in. and smaller may be weighed in convenient lots; pipe in sizes larger than 4 in. shall be weighed separately.

TABLE V.—PERMISSIBLE VARIATIONS IN OUTSIDE DIAMETER.

Nominal Pipe Size, in.	Permissible Variations in Outside Diameter, in.	
	Over	Under
⅛ to 1½, incl.	1/64 (0.015)	1/32 (0.031)
Over 1½ to 4, incl.	1/32 (0.031)	1/32 (0.031)
Over 4 to 8, incl.	1/16 (0.062)	1/32 (0.031)
Over 8 to 18, incl.	3/32 (0.093)	1/32 (0.031)
Over 18 to 24, incl.	⅛ (0.125)	1/32 (0.031)

NOTE 4.—A system of standard pipe sizes has been approved by the American Standards Association as the American Standard for Wrought Steel and Wrought Iron Pipe (ASA No. B 36.10—1959). Copies of this American Standard are available from The American Society of Mechanical Engineers, 345 E. 47th St., New York 17, N. Y.

(*b*) *Diameter.*—Permissible variations in outside diameter shall not exceed the limits prescribed in Table V.

(*c*) *Thickness.*—The minimum wall thickness at any point shall not be more than 12.5 per cent under the nominal wall thickness specified.

NOTE 5.—The minimum wall thickness on inspection is shown in Table VI (Appendix I).

Lengths

22. (*a*) The lengths required shall be specified in the order.

(*b*) No jointers are permitted unless otherwise specified.

(*c*) If definite lengths are not required, pipe may be ordered in single random lengths of 16 to 22 ft with 5 per cent 12 to 16 ft, or in double random lengths with a minimum average of 35 ft and a minimum length of 22 ft with 5 per cent 16 to 22 ft.

Ends

23. Unless otherwise specified, pipe shall be furnished with plain ends. All burrs at the ends of the pipe shall be removed.

Finish

24. (*a*) The finished pipe shall be reasonably straight and free from injurious defects. At the discretion of the inspector representing the purchaser, finished pipe shall be subject to rejection if surface defects acceptable under Paragraph (*c*) are not scattered, but appear over a large area in excess of what is considered a workmanlike finish.

(*b*) *Depth of Injurious Defects.*—All defects shall be explored for depth. When the depth is in excess of 12½ per cent of the nominal wall thickness or encroaches on the minimum wall thickness, such defects shall be considered injurious.

(*c*) *Machining or Grinding Defects not Classified as Injurious.*—Surface defects not classified as injurious shall be treated as follows:

(*1*) Pipe showing scabs, seams, laps, tears, or slivers not deeper than 5 per cent of the nominal wall thickness need not have these defects removed. If deeper than 5 per cent, such defects shall be removed by machining or grinding.

(*2*) Pipe showing inside or outside surface checks (fish scale) 1/64 in. or less in depth need not have these defects removed. Such defects over 1/64 in. but not more than 1/32 in. in depth shall be removed by machining or grinding. Pipe on which these defects are more than 1/32 in. in depth shall be rejected unless the manufacturer can demonstrate to the purchaser that the defects are not injurious as defined in Paragraph (*b*).

(*3*) Mechanical marks or abrasions and pits shall be acceptable without grinding or machining provided the depth does not exceed the limitations set forth in Paragraph (*b*) and if not deeper than 1/16 in. If such defects are deeper than 1/16 in., but not deeper than 12½ per cent of the nominal wall thickness, they shall be removed by grinding or machining to sound metal.

(*4*) When defects have been removed by grinding or machining, the outside diameter at the point of grinding or machining may be reduced by the amount so removed. Should it be impracticable to secure a direct measurement, the wall thickness at the point of grinding, or at a defect not required to be removed, shall be determined by deducting the amount removed in grinding or the depth of the defect, from the minimum measured wall thickness at the ends of the pipe, and the remainder shall not be less than 87½ per cent of the nominal wall thickness.

(*5*) Machining or grinding shall follow the inspection at the mill of the pipe as rolled and shall be followed by supplementary visual inspection.

(*d*) *Repair by Welding.*—Repair of injurious defects shall be permitted only subject to the approval of the purchaser and with the further understanding that the composition of the welding rod shall be suitable for the composition of the metal being welded. Welding of injurious defects in no case shall be permitted when the depth of defect exceeds 33⅓ per cent of the nominal pipe wall thickness or the length of repair exceeds 25 per cent of the nominal diameter of the pipe. Defects shall be thoroughly chipped or ground out before welding, and then heat treated in accordance with Section 5. Each length of repaired pipe shall be retested hydrostatically in accordance with Section 14.

Marking

25. (*a*) Each length of pipe manufactured in accordance with these specifications shall be legibly stenciled, beginning approximately 12 in. from one end, with the name or brand of the manufacturer, the ASTM designation, the grade (such as grade O) whether hot-finished, cold-drawn, seamless or welded, the schedule number, and the letters "LT" followed by the temperature at which the impact tests (Section 13) were made, thus "LT-150." When pipe marked as specified in this section is rejected, the ASTM designation shall be cancelled.

(*b*) On smaller diameter pipe which is bundled, the information in Paragraph (*a*) may be legibly stamped on a metal tag securely attached to each bundle.

(*c*) When it is specified that certain requirements of these specifications are to be completed by the purchaser upon receipt of the material, the manufacturer shall indicate that all requirements of the specifications have not been completed

by a letter X, Y, or Z immediately following the specification number. This letter may be removed after completion of all requirements in accordance with these specifications. An explanation of specification requirements to be completed is provided in Section 26(*b*).

Inspection

26. (*a*) The inspector representing the purchaser shall have free entry, at all times while work on the contract of the purchaser is being performed to all parts of the manufacturer's works that concern the manufacture of the material ordered. The manufacturer shall afford the inspector, without charge, all reasonable facilities to satisfy him that the material is being furnished in accordance with these specifications. All tests and inspection shall be made at the place of manufacture prior to shipment and at the manufacturer's expense, unless otherwise specified, and shall be so conducted as not to interfere unnecessarily with the operation of the works. When specified in the order, the manufacturer shall notify the purchaser in time so that he may have his inspector present to witness any part of the manufacture or tests that may be desired.

(*b*) *Certification.*—When agreed upon in writing between the manufacturer and the purchaser, a certification that the material conforms to the requirements of these specifications shall be the basis of acceptance of the material. Otherwise, the manufacturer shall report to the purchaser or his representative the results of the chemical analyses and the mechanical tests made in accordance with these specifications. The certificate or report accomplished by the manufacturer shall include a statement of explanation for the letter added to the specification number (see Section 25(*c*)), when all the requirements of these specifications have not been completed. The purchaser must certify that all requirements of the specifications have been completed before removal of the letter X, Y, or Z.

Rejection

27. (*a*) When inspection at the place of manufacture has been waived by the purchaser, any rejection based on tests made in accordance with the requirements of these specifications shall be reported to the manufacturer within twelve working days from the receipt of samples by the purchaser.

(*b*) No rejections under these or any other specifications shall be marked as specified in Section 25 for sale under these specifications except where such pipe fails to comply with the weight requirements alone, in which case it may be sold under the weight specifications with which it does comply.

Rehearing

28. When inspection at the place of manufacture has been waived by the purchaser, samples that represent rejected material, and that have been tested in accordance with the requirements of these specifications, shall be preserved for two weeks from the date of the test report. In case of dissatisfaction with the results of the tests, the manufacturer may make claim for a rehearing within that time.

APPENDIX I

TABLE VI. -TABLE OF MINIMUM WALL THICKNESSES ON INSPECTION FOR NOMINAL (AVERAGE) PIPE WALL THICKNESSES.

NOTE 1.—The following formula, upon which this table is based, may be applied to calculate minimum wall thickness from nominal (average) wall thickness:

$$t_n \times 0.875 = t_m$$

where:

t_n = nominal (average) wall thickness in inches, and

t_m = minimum wall thickness in inches.

The wall thickness is expressed to three decimal places, the fourth decimal place being carried forward or dropped, in accordance with the Recommended Practices for Designating Significant Places in Specified Limiting Values (ASTM Designation: E 29).

NOTE 2.—This table is a master table covering wall thicknesses available in the purchase of different classifications of pipe, but it is not meant to imply that all of the walls listed therein are obtainable under these specifications.

Nominal (Average) Thickness (t_n), in.	Minimum Thickness on Inspection (t_m), in.	Nominal (Average) Thickness (t_n), in.	Minimum Thickness on Inspection (t_m), in.	Nominal (Average) Thickness (t_n), in.	Minimum Thickness on Inspection (t_m), in.
0.068	0.060	0.294	0.257	0.750	0.656
0.088	0.077	0.300	0.262	0.812	0.710
0.091	0.080	0.307	0.269	0.843	0.738
0.095	0.083	0.308	0.270	0.864	0.756
0.113	0.099	0.312	0.273	0.875	0.766
0.119	0.104	0.318	0.278	0.906	0.793
0.125	0.109	0.322	0.282	0.937	0.820
0.126	0.110	0.330	0.289	0.968	0.847
0.133	0.116	0.337	0.295	1.000	0.875
0.140	0.122	0.343	0.300	1.031	0.902
0.145	0.127	0.344	0.301	1.062	0.929
0.147	0.129	0.358	0.313	1.093	0.956
0.154	0.135	0.365	0.319	1.125	0.984
0.156	0.136	0.375	0.328	1.156	1.012
0.179	0.157	0.382	0.334	1.218	1.066
0.187	0.164	0.400	0.350	1.250	1.094
0.188	0.164	0.406	0.355	1.281	1.121
0.191	0.167	0.432	0.378	1.312	1.148
0.200	0.175	0.436	0.382	1.343	1.175
0.203	0.178	0.437	0.382	1.375	1.203
0.216	0.189	0.438	0.383	1.406	1.230
0.218	0.191	0.500	0.438	1.438	1.258
0.219	0.192	0.531	0.465	1.500	1.312
0.226	0.198	0.552	0.483	1.531	1.340
0.237	0.207	0.562	0.492	1.562	1.367
0.250	0.219	0.593	0.519	1.593	1.394
0.258	0.226	0.600	0.525	1.750	1.531
0.270	0.242	0.625	0.547	1.781	1.558
0.277	0.242	0.656	0.574	1.812	1.586
0.279	0.244	0.674	0.590	1.968	1.722
0.280	0.245	0.687	0.601	2.062	1.804
0.281	0.246	0.719	0.629	2.343	2.050

APPENDIX II

EXPLANATION OF THE USE OF IMPACT TESTS IN DETERMINING THE ACCEPTABILITY OF STEELS FOR LOW TEMPERATURE SERVICE

Years of experience and test work have shown that some materials, particularly ferritic steels, change from tough to brittle behavior with a decrease in temperature. The transition temperatures and the levels of impact strength vary with different materials, depending on many factors. When materials are used under conditions where brittle behavior may occur, there is danger that flaws, which would be considered non-hazardous if the material were tough, may propagate to disastrous failure of the equipment.

Accordingly, many varieties of tests have been developed in an effort to evaluate the toughness of materials and the conditions under which they will transform from tough to brittle behavior. There are many opinions and shadings of opinion as to which test is most suitable for evaluating the suitability of materials for service at low temperatures; however, as yet, only the Charpy test has received sufficient general acceptance and has been used as a basis for purchasing for sufficient time to be included in ASTM standards. Furthermore, this test is required for low-temperature equipment constructed in accordance with the ASME Code for Unfired Pressure Vessels and the ASA Code for Pressure Piping. These ASTM specifications for materials for low-temperature service are primarily used in piping and pressure vessel construction which are subjected to temperatures lower than ambient and consequently the impact test requirements are written to provide material which in quality and by its testing can be validated for use under these construction Codes.

No assurance is offered that compliance with these requirements will provide a material which will resist brittle failure under all possible conditions of service to as low as the specified impact test temperature. It may eventually be possible that other types of tests will provide greater assurance of material suitability for low-temperature services, but at this time there is insufficient knowledge for agreement and general acceptance of some test other than the Charpy impact test.

Attention is directed to the following subjects which have a bearing on the value of Charpy impact tests.

1. Much of the original work in the field of notched toughness was done on wrought materials which had definite directional grain flow parallel to the axis of the bar, and the specimens were taken with the longitudinal axis of the specimen parallel to the axis of the bar. It has been well established that the results from impact testing of the same piece of steel may vary considerably, depending upon the orientation of the specimen to the direction of grain flow. Although it is known that specimens taken with their axis transverse to the direction of grain flow will have lower values depending on the amount of cross rolling or forging the material has received, there was insufficient test data to permit specific mandatory requirements on the impact properties of wrought materials determined in any direction other than parallel to the direction of grain flow. Except in special cases this limitation still exists.

2. It is acknowledged that impact tests are of a qualitative rather than a quantitative nature. As yet, no satisfactory correlation has been possible between impact strength determined by tests on small standardized specimens and the behavior of a structural part under any given conditions of loading in service. The required value of 15 ft-lb as determined by the keyhole Charpy Test is an arbitrary value which can be met by carbon and low-alloy constructional steels when tested at temperatures above that where their behavior changes from tough to brittle as judged by this test. The acceptability of this dividing line seems to be justified by service experience on carbon and certain low-alloy steels.

3. The literature on impact testing shows that notched bar impact strength in constructional steels differs widely in accordance with many variables. Consequently, there is bound to be some discrepancy between an individual test bar and the entire part which it represents. No system of test bar selection can guarantee that every sample would meet minimum requirement. Test bar selection must be a compromise to generally represent the product.

4. The committees responsible for the material specifications have had as an objective the selection of test specimens which will represent the properties of the materials in the form in which they will be used. However, accomplishment of this objective has only partially been realized. At this time it is impossible to select samples for testing that will represent all parts and sizes of the product involved. Particularly in ferritic steels it is impractical to remove the impact bars from heavy sections over about 4 in. and expect them to show results as high as tests from light sections of the same material. The practical commercial limits on the amount of testing possible, as well as limits to knowledge of what results may be expected from testing in nonstandard locations, have been considered in drafting these specifications. With time and increased knowledge it may be possible to require more representative testing.

SPECIFICATION FOR SEAMLESS AND WELDED CARBON AND ALLOY STEEL TUBES FOR LOW TEMPERATURE SERVICE

SA-334

(IDENTICAL WITH ASTM SPECIFICATION A 334-61T EXCEPT THAT NOTE 1 IN PARAGRAPH 1 (A) HAS BEEN DELETED AND EDITORIAL CORRECTIONS HAVE BEEN MADE)

Scope

1. (*a*) This specification covers several grades of seamless and welded carbon and alloy steel tubes intended for use at low temperatures.

NOTE 2.—Tubing smaller than ¼ in. in diameter or with walls thinner than 0.049 in. may require different mechanical and manipulating tests than prescribed in this specification. Testing of such tubing should be a matter of agreement between the manufacturer and the purchaser.

(*b*) The purchaser shall specify in the order the outside diameter, minimum wall thickness and the grade desired. The inside diameter shall not be specified.

(*c*) Other grades of less commonly used steels may be furnished to the general requirements of this specification including notched bar impact tests, with the chemical and tensile requirements and impact test temperatures to be as agreed upon between the manufacturer and the purchaser.

NOTE 3.—The committee formulating this specification has included those grades of ferritic steels most commonly used at low temperatures when their suitability has been assured by means of notched bar impact tests. Such other grades will be considered for inclusion in this specification should the extent of their future usage warrant standardization.

General Requirements

2. Material furnished under this specification shall conform to the applicable requirements of the current edition of the Specification for General Requirements for Carbon, Ferritic Alloy, and Austenitic Alloy Steel Tubes (ASTM Designation: A 450), unless otherwise provided herein.

Process

3. The steel shall be made by either or both of the following processes: open hearth or electric furnace. The steels shall be made using recognized melting practices necessary to produce steels which shall meet the impact requirements of this specification.

Manufacture

4. The tubes shall be made by the seamless or an automatic welding process with no addition of filler metal in the welding operation.

TABLE I.—CHEMICAL REQUIREMENTS.

Grade	Carbon, max, per cent	Manganese, per cent	Phosphorus, max, per cent	Sulfur, max, per cent	Silicon, per cent	Nickel per cent
O	0.25	0.64 to 1.06	0.050	0.060	...	...
3	0.19	0.31 to 0.64	0.050	0.050	0.18 to 0.37	3.18 to 3.82
5	0.19	0.20 to 0.64	0.050	0.050	0.18 to 0.37	4.68 to 5.32

Heat Treatment

5. (*a*) All tubes shall be furnished in the normalized or normalized and tempered condition except when otherwise agreed upon by the manufacturer and the purchaser.

(*b*) Material from which impact specimens are obtained shall be in the same condition of heat treatment as the tubes furnished.

Chemical Composition

6. The steel shall conform to the requirements as to chemical composition prescribed in Table I.

Ladle Analysis

7. An analysis of each heat shall be made to determine the percentages of the elements specified. The chemical composition thus determined shall be reported to the purchaser or his representative, and shall conform to the requirements specified.

Check Analysis

8. (*a*) An analysis of either one billet or one length of flat rolled stock or one tube shall be made for each heat. The chemical composition thus determined shall conform to the requirements specified.

(*b*) If the analysis made in accordance with Paragraph (*a*) does not conform to the requirements specified, an analysis of each billet or length of flat rolled stock or tube from the same heat may be made, and all billets, stock, or tubes thus conforming to the requirements shall be accepted so far as chemical composition is concerned.

Tensile Properties

9. The material shall conform to the requirements as to tensile properties prescribed in Table II.

Hardness Requirements

10. The tubes shall have a hardness number not exceeding those prescribed in Table III.

Impact Properties

11. (*a*) The notched bar impact properties of each set of three impact specimens, including specimens for the welded joint in welded tubing, when tested at

TABLE II.—TENSILE REQUIREMENTS.

	Grade O	Grades 3 and 5
Tensile strength, min, psi	55 000	65 000
Yield point min, psi	30 000	35 000
Elongation in 2 in., min, per cent:		
Basic minimum elongation for walls 5/16 in. and over in thickness, strip tests, and for all small sizes tested in full section	35	30
When standard round 2-in. gage length test specimen is used	28	22
For strip tests, the width of the gage section shall be 1 in., and a deduction for each 1/32-in. decrease in wall thickness below 5/16 in. from the basic minimum elongation of the following percentage	1.75[a]	1.50[a]

[a] The following table gives the calculated minimum values:

Wall Thickness, in.	Elongation in 2 in., min, per cent	
	Grade O	Grades 3 and 5
5/16 (0.312)	35.00	30.00
9/32 (0.281)	33.25	28.50
1/4 (0.250)	31.50	27.00
7/32 (0.219)	29.75	25.50
3/16 (0.188)	28.00	24.00
5/32 (0.156)	26.25	22.50
1/8 (0.125)	24.50	21.00
3/32 (0.094)	22.75	19.50
1/16 (0.062)	21.00	18.00

NOTE.—The above table gives the computed minimum elongation values for each 1/32-in. decrease in wall thickness. Where the wall thickness lies between the two values shown above, the minimum elongation value shall be determined by the following equation:

Grade	Formula
O	$E = 56t + 17.50$
3 and 5	$E = 48t + 15.00$

where:
E = elongation in 2 in. in per cent, and
t = actual thickness of specimen, in inches.

TABLE III.—MAXIMUM HARDNESS NUMBER.

Grade	Rockwell	Brinell
O	B85	163
3	B90	190
5	B95	207

TABLE IV.—IMPACT REQUIREMENTS.

Size of Specimen, mm	Minimum Average Notched Bar Impact Value of Each Set of Three Specimens, ft-lb	Minimum Notched Bar Impact Value of One Specimen Only of a Set, ft-lb
10 by 10	15	10
10 by 7.5	12.5	8.5
10 by 5	10	7.0
10 by 2.5	5	3.5

temperatures in conformance with Section 12(*a*), shall not be less than the values prescribed in Table IV.

(*b*) *Retests.*—If the impact value of one specimen is below the minimum value, or the impact values of two specimens are less than the minimum average value but not below the minimum value permitted on a single specimen, a retest shall be allowed. The retest shall consist of breaking three additional specimens, each of which retest specimens must equal or exceed the required average value. When an erratic result is caused by a defective specimen, or there is uncertainty in test procedures, a retest will be allowed.

Impact Test

12. (*a*) All material furnished under this specification shall be tested for impact resistance at the minimum temperature for the respective grades as prescribed in Table V. Special impact tests on individual lots of material may be made at lower temperatures if agreed upon by the manufacturer and the purchaser.

(*b*) The notched bar impact test shall be made in accordance with the procedure for the simple beam, Charpy type of test of the Methods for Notched Bar Impact Testing of Metallic Materials (ASTM Designation: E 23).

(*c*) Impact tests specified for temperatures lower than +70 F should be made with the following precautions: The impact test specimens as well as the handling tongs shall be cooled a sufficient time in a suitable container so that both reach the desired temperature. The temperature shall be measured with thermocouples, thermometers, or any other suitable devices and shall be controlled within ±3 F. The specimens shall be quickly transferred from the cooling device to the anvil of the Charpy impact testing machine and broken with a time lapse of not more than 5 sec.

TABLE V.—IMPACT TEMPERATURE.

Grade	Minimum Impact Test Temperature, deg Fahr
O	−50
3	−150
5	−150

TABLE VI.—HEAT TREATMENT LOT.

Size of Tube	Size of Lot
2 in. and over in outside diameter and 0.200 in. and over in wall thickness	not more than 50 tubes
Under 2 in. but over 1 in. in outside diameter, or over 1 in. in outside diameter and over 0.200 in. in wall thickness	not more than 75 tubes
1 in. or under in outside diameter	not more than 125 tubes

Specimens for Impact Test

13. (*a*) Notched bar impact specimens shall be of the simple beam, Charpy type with either a keyhole or equivalent slot notch in accordance with Methods E 23. Standard specimens 10 by 10 mm in cross-section shall be used unless the material to be tested is of insufficient thickness, in which case the largest obtainable substandard size specimens shall be used. When the size of the finished tube is insufficient to permit obtaining substandard size impact specimens, the specimens for notched bar impact testing shall be taken from the rounds, tubes, slabs, or strip before reducing to the final size. The material from which the specimens are taken shall be in the same condition of heat treatment as will be the finished tubes.

(*b*) Test specimens shall be obtained so that the longitudinal axis of the specimen is parallel to the longitudinal axis of the tube while the axis of the drilled hole (or ground slot) shall be perpendicular to the surface. On wall thicknesses of 1 in. or less, the specimens shall be obtained with their axial plane located at the midpoint; on wall thicknesses over 1 in., the specimens shall be obtained with their axial plane located ½ in. from the outer surface.

(*c*) When testing welds the notch of

the specimen shall be in the welded joint and, where the diameter and wall thickness permits, the longitudinal axis of the specimen shall be transverse to the longitudinal axis of the tube.

Mechanical Tests Required (In Addition to Impact Test)

14. (*a*) *Tension Test.*—One tension test shall be made on specimens from two tubes from each lot of 100 finished tubes or fraction thereof.

(*b*) *Flattening Test.*—One flattening test shall be made on specimens from each end of one finished tube, not the one used for the flaring test, from each lot[5] heat treated in a batch-type furnace. For the purpose of calculating the number of tests on tubes heat treated by the continuous process, the number of tubes in a heat-treated lot[5] shall be determined from the size of the tubes as prescribed in Table VI.

[5] The term "lot" applies to all tubes of the same nominal size and wall thickness (or schedule) which are produced from the same heat of steel and subjected to the same finishing treatment in a continuous furnace; when final heat treatment is in a batch type furnace, the lot shall include only those tubes which are heat treated in the same furnace charge. When no heat treatment is performed following final forming operations, the lot shall include hot-rolled material only or cold-drawn material only.

(*c*) *Flaring Test.*—One flaring test shall be made on specimens from each end of one finished tube, not the one used for the flattening test, from each lot[5] heat treated in a batch-type furnace. For the purpose of calculating the number of tests on tubes heat treated by the continuous process, the number of tubes in a heat-treated lot[5] shall be determined from the size of the tubes as prescribed in Table VI.

(*d*) *Reverse Flattening Test.* — For welded tubes, one reverse flattening test shall be made on a specimen from each 1500 ft of finished tubing.

(*e*) *Hardness Test.*—One Brinell or Rockwell hardness determination shall be made on 5 per cent of all tubes.

(*f*) *Hydrostatic Test.*—Each tube shall be subjected to the hydrostatic test.

Number of Impact Tests

15. (*a*) One notched bar impact test consisting of breaking three specimens, shall be made from each heat represented in a heat treatment load on specimens taken from the finished tube. This test shall represent only such tubes from the same heat, the wall thicknesses of which do not exceed by more than $\frac{1}{4}$ in. the wall thicknesses of the tube from which the test specimens are taken.

(*b*) If heat treatment is performed in continuous or batch furnaces controlled within a 50 deg Fahr range and equipped with recording pyrometers so that complete records of heat treatment are available, then one test from each heat in a continuous run only shall be required instead of one test from each heat in each heat-treatment load.

(*c*) On welded tubing additional impact tests of the same number as required in Paragraphs (*a*) or (*b*) shall be made to test the weld.

(*d*) Specimens showing defects while being machined or prior to testing may be discarded and replacements shall be considered as original specimens.

Finish

16. Finished tubes shall be reasonably straight and have smooth ends free from burrs, and shall be free from injurious defects. Minor defects may be removed by grinding, provided the wall thicknesses are not decreased to less han that permitted in Table V of Specification A 450.

Marking

17. In addition to the marking prescribed in Specification A 450, the marking shall include whether hot-finished, cold-drawn, seamless, or welded.

SPECIFICATION FOR SEAMLESS FERRITIC ALLOY STEEL PIPE FOR HIGH-TEMPERATURE SERVICE

SA-335

(IDENTICAL WITH ASTM SPECIFICATION A 335-61T)

Scope

1. (*a*) These specifications cover nominal (average) wall seamless alloy-steel pipe intended for high temperature service.[3] Pipe ordered under these specifications shall be suitable for bending, flanging (vanstoning), and similar forming operations, and for fusion welding. Selection will depend upon design, service conditions, mechanical properties, and high temperature characteristics.

(*b*) Twelve grades of ferritic steels[4] are covered. Their compositions are given in Table I. The grade desired shall be specified on the order.

(*c*) Supplementary requirements (Paragraphs S1 to S7) of an optional nature are provided. These supplementary requirements call for additional tests to be made at the expense of the purchaser, and when desired shall be so stated in the order, together with the number of such tests required.

Process

2. (*a*) The steel shall be made by the electric furnace process or other processes approved by the purchaser, except that grades P1, P2, and P12 may be made by the open-hearth process.

(*b*) Unless otherwise specified, pipe 2 in. and over in nominal diameter shall be furnished hot-finished followed by the treatment specified in Section 4.

(*c*) Unless otherwise specified, pipe under 2 in. in nominal diameter may be furnished either hot-finished or cold-drawn, with a finishing treatment as required in Section 4.

(*d*) *Grade P2.*—The steel from which the pipe is made shall be a coarse-grained steel having a carburized grain size of 1 to 5 as determined in accordance with the Methods for Estimating the Average Grain Size of Metals (ASTM Designation: E 112) and its Plate IV, by carburizing at 1700 F for 8 hr. The specimen shall be taken from the bloom or billet.

(*e*) *Grade P12.*—The steel from which the pipe is made shall be made by coarse grain melting practice. Specific limits, if any, on grain size or deoxidation practice shall be a matter of agreement between the manufacturer and the purchaser.

Discard

3. A sufficient discard shall be made from each ingot to secure freedom from injurious piping and undue segregation.

TABLE I.—CHEMICAL REQUIREMENTS.

Grade	Carbon, per cent	Manganese, per cent	Phosphorus, max, per cent	Sulfur, max, per cent	Silicon, per cent	Chromium, per cent	Molybdenum, per cent	Titanium or Columbium
P1	0.10 to 0.20	0.30 to 0.80	0.045	0.045	0.10 to 0.50	....	0.44 to 0.65	....
P2	0.10 to 0.20	0.30 to 0.61	0.045	0.045	0.10 to 0.30	0.50 to 0.81	0.44 to 0.65	....
P5	0.15 max	0.30 to 0.60	0.030	0.030	0.50 max	4.00 to 6.00	0.45 to 0.65	....
P5b	0.15 max	0.30 to 0.60	0.030	0.030	1.00 to 2.00	4.00 to 6.00	0.45 to 0.65	....
P5c	0.12 max	0.30 to 0.60	0.030	0.030	0.50 max	4.00 to 6.00	0.45 to 0.65	[4]
P7	0.15 max	0.30 to 0.60	0.030	0.030	0.50 to 1.00	6.00 to 8.00	0.44 to 0.65	....
P9	0.15 max	0.30 to 0.60	0.030	0.030	0.25 to 1.00	8.00 to 10.00	0.90 to 1.10	....
P11	0.15 max	0.30 to 0.60	0.030	0.030	0.50 to 1.00	1.00 to 1.50	0.44 to 0.65	....
P12	0.15 max	0.30 to 0.61	0.045	0.045	0.50 max	0.80 to 1.25	0.44 to 0.65	....
P15	0.15 max	0.30 to 0.60	0.030	0.030	1.15 to 1.65	....	0.44 to 0.65	....
P21	0.15 max	0.30 to 0.60	0.030	0.030	0.50 max	2.65 to 3.35	0.80 to 1.06	....
P22	0.15 max	0.30 to 0.60	0.030	0.030	0.50 max	1.90 to 2.60	0.87 to 1.13	....

[4] Grade P5c shall have a titanium content of not less than 4 times the carbon content and not more than 0.70 per cent; or a columbium content of 8 to 10 times the carbon content.

[3] Appendix I lists the sizes and wall thickness of pipe which may be obtained under current commercial practice.

[4] Ferritic steels in these specifications are defined as low and intermediate alloy steels, containing up to and including 10 per cent chromium.

Heat Treatment

4. (*a*) All steels shown in Table I other than P1, P2, P5c, and P12 shall be reheated and furnished in the full-annealed, isothermal annealed or normalized and tempered condition, unless otherwise agreed upon between the manufacturer

and the purchaser. If furnished in the normalized and tempered condition, the temperature for tempering shall be not less than 1200 F.

NOTE 1.—It is recommended that the temperature for tempering should be at least 100 F above the intended service temperature; consequently, the purchaser should advise the manufacturer if the service temperature is to be over 1100 F.

(*b*) Unless otherwise agreed upon by the manufacturer and the purchaser, the hot-rolled or cold-drawn pipe, in grades P1, P2, and P12, as a final heat treatment, shall be given a stress relieving treatment at 1200 to 1300 F.

(*c*) Grade P5c steel, unless otherwise specified, shall be treated by heating to approximately 1350 F for a proper time, followed by air or furnace cooling.

NOTE 2.—Certain of the ferritic steels covered by these specifications will harden if cooled rapidly from above their critical temperature. Some will air-harden, that is, become hardened to an undesirable degree when cooled in air from high temperatures. Therefore, operations involving heating such steels above their critical temperatures, such as welding, flanging, and hot bending, should be followed by suitable heat-treatment.

Chemical Composition

5. The steel shall conform to the chemical requirements prescribed in Table I.

Ladle Analysis

6. An analysis of each heat of steel shall be made by the steel manufacturer to determine the percentages of the elements specified in Section 5. The chemical composition thus determined, or that determined from a check analysis made by the manufacturer, if the latter has not manufactured the steel, shall be reported to the purchaser or his representative, and shall conform to the requirements specified in Section 5.

Check Analysis

7. (*a*) At the request of the purchaser, an analysis of two pipes from each lot shall be made by the manufacture. A lot[6] of pipe shall consist of the following:

Nominal Diameter, in.	Lengths of Pipe in Lot
Under 2	400 or fraction thereof
2 to 5, incl.	200 or fraction thereof
6 and over	100 or fraction thereof

(*b*) Samples for chemical analysis, except for spectrochemical analysis, shall be taken in accordance with the Method of Sampling Steel, Cast Iron, Open-Hearth Iron, and Wrought Iron for Determination of Chemical Composition (ASTM Designation: E 59). The results of these analyses shall be reported to the purchaser or his representative, and shall conform to the requirements specified in Table I.

(*c*) If the analysis of one of the tests specified in Sections 6 or 7 (*a*) does not conform to the requirements specified in Section 5, an analysis of each billet or pipe from the same heat or lot may be made, and all billets or pipe conforming to the requirements shall be accepted.

Tensile Properties

8. (*a*) The material shall conform to the requirements prescribed in Table II as to tensile properties at room temperature.

(*b*) The yield point shall be determined by the drop of the beam, by the halt in the gage of the testing machine, by the use of dividers, or by other approved methods. When a definite yield point is not exhibited, the yield strength corresponding to a permanent offset of 0.2 per cent of the gage length of the specimen, or to a total extension of 0.5 per cent of the gage length under load shall be determined.

Bending Properties

9. For pipe 2 in. and under in nominal diameter, a sufficient length of pipe shall stand being bent cold through 90 deg around a cylindrical mandrel, the diameter of which is twelve times the nominal diameter of the pipe, without developing cracks. When ordered for close coiling, the pipe shall stand being bent cold through 180 deg around a cylindrical mandrel, the diameter of which is eight times the nominal diameter of the pipe, without failure.

Flattening Test

10. For pipe over 2 in. in nominal diameter, a section of pipe not less than 2½ in. in length shall be flattened cold between parallel plates until the opposite walls of the pipe meet. No cracks or breaks in the metal shall occur until the distance between the plates is less than that calculated for the values of "*H*" by the following formula:

$$H = \frac{(1 + e)t}{e + t/D}$$

where:

H = distance between flattening plates in inches,
e = deformation per unit length (constant for these grades of steel, 0.08),
t = nominal wall thickness of pipe in inches, and
D = actual outside diameter of pipe in inches.

Evidence of laminations or burnt material shall not develop during the entire flattening process.

TABLE II.—TENSILE REQUIREMENTS

Identification Symbol	P1, P2	All Others
Tensile strength, min, psi	55 000	60 000
Yield point, min, psi	30 000	30 000
	Elongation Requirements, All Grades	
	Longitudinal	Transverse
Elongation in 2 in., min, per cent:		
Basic minimum elongation for wall 5/16 in. and over in thickness, strip tests, and for all small sizes tested in full section	30	20
When standard round 2-in. gage length test specimen is used	22	14
For strip tests, the width of the gage section shall be 1½ in. and a deduction for each 1/32-in. decrease in wall thickness below 5/16 in. from the basic minimum elongation of the following percentage	1.50[a]	1.00[a]

[a] The following table gives the calculated minimum values:

Wall Thickness, in.	Elongation in 2 in., min, per cent	
	Longitudinal	Transverse
5/16 (0.312)	30.00	20.00
9/32 (0.281)	28.50	19.00
1/4 (0.250)	27.00	18.00
7/32 (0.219)	25.50	...
3/16 (0.188)	24.00	...
5/32 (0.156)	22.50	...
1/8 (0.125)	21.00	...
3/32 (0.094)	19.50	...
1/16 (0.062)	18.00	...

NOTE.—The above table gives the computed minimum elongation values for each 1/32-in. decrease in wall thickness. Where the wall thickness lies between two values above, the minimum elongation value is determined by the following formula:

Direction of Test	Formula
Longitudinal	$E = 48\,t + 15.00$
Transverse	$E = 32\,t + 10.00$

where:
E = elongation in 2 in. in per cent, and
t = actual thickness of specimens, in inches.

Hydrostatic Test

11. (*a*) Unless otherwise agreed upon between the manufacturer and the purchaser, each length of pipe shall be tested by the manufacturer to a hydrostatic pressure which will produce in the pipe wall a stress of 60 per cent of the minimum specified yield point at room temperature. This pressure shall be determined by the following formula:

$$P = \frac{2St}{D}$$

where:

P = minimum hydrostatic test pressure in pounds per square inch,
S = 0.60 times the minimum specified yield point at room temperature in pounds per square inch,
t = nominal wall thickness in inches, and
D = outside diameter in inches.

(*b*) The maximum hydrostatic test pressure shall not exceed 2500 psi for nominal sizes 3 in. and under, nor 2800 psi for all nominal sizes over 3 in. The hydrostatic pressure shall be maintained for not less than 5 sec.

NOTE.—When requested by the purchaser and so stated in the order, pipe in sizes 14 in. in nominal diameter and smaller shall be tested to one and one-half times the specified working pressure, provided the fiber stress corresponding to these test pressures does not exceed 60 per cent of the minimum specified yield point of the material as determined by the above formula. When one and one-half times the working pressure exceeds 2800 psi, the hydrostatic test pressure shall be a matter of agreement between the purchaser and the manufacturer.

Photomicrographs

12. To check the grain size requirement of Section 2 (*d*) for grades P2 and P12 only, one photomicrograph of the McQuaid-Ehn test shall be made from one bloom or billet of each heat applied on the order, and a print of these photomicrographs shall be furnished to the purchaser.

Test Specimens and Methods of Testing

13. (*a*) The test specimens and the tests required by these specifications shall conform to those described in the Methods and Definitions for the Mechanical Tests of Steel Products (ASTM Designation: A 370).

(*b*) Specimens cut either longitudinally or transversely shall be acceptable for the tension test.

(*c*) Test specimens for the bend and flattening tests shall consist of sections cut from a pipe. Specimens for flattening tests shall be smooth on the ends and free from burrs, except when made on crop ends.

(*d*) All routine check tests shall be made at room temperature.

Number of Tests

14. (*a*) For material heat treated in a batch-type furnace, tests shall be made as follows on 5 per cent of the pipe from each treated lot,[7] For small lots at least one pipe shall be tested. Results of these shall be reported to the purchaser or his representative:

The transverse or longitudinal tension test specified in Section 8.

The bend test specified in Section 9 for pipe 2 in. and under in nominal diameter, and

The flattening test specified in Section 10 for pipe over 2 in. in nominal diameter.

(*b*) For material heat treated by the continuous process, the tests specified in Paragraph (*a*) shall be made on a sufficient number of pipes to consitute 5 per cent of the lot[7] but in no case less than 2 pipes.

(*c*) If any test specimen shows defective machining or develops flaws, it may be discarded and another specimen substituted.

(*d*) If the percentage of elongation of any tension test specimen is less than that specified in Section 8 (*a*) and any part of the fracture is more than ¾ in. from the center of the gage length as indicated by scribed scratches marked on the specimen before testing, a retest shall be allowed. If a specimen breaks in an inside or outside surface flaw, a retest shall be allowed.

(*e*) Each length of pipe shall be subjected to the hydrostatic test specified in Section 11.

Retests

15. If the results of any mechanical tests of any lot[7] do not conform to the requirements specified in Sections 8, 9, or 10, retests shall be made on additional pipes of double the original number from the same lot, each of which shall conform to the requirements specified.

Retreatment

16. If individual lengths of pipe selected to represent any lot fail to conform to the test requirements specified in Sections 8, 9, or 10, the lot may be reheat-treated and resubmitted for the test, except that any individual lengths which meet the test requirements before retreating will be acceptable.

Permissible Variations in Weight and Dimensions

17. (*a*) *Weight.*—The weight of any length of pipe in nominal sizes of 12 in. and under shall not vary more than 6.5 per cent over and 3.5 per cent under that specified. For nominal sizes over 12 in. the weight of any length shall not vary more than 10 per cent over and 5 per cent under that specified. Unless otherwise agreed upon between the manufacturer and the purchaser, pipe in sizes 4 in. and smaller may be weighed in convenient lots; pipe in sizes larger than 4 in. shall be weighed separately.

NOTE.—A system of standard pipe sizes has been approved by the American Standards

[6] A lot shall consist of the number of lengths specified in Section 7, of the same size and wall thickness from any one heat of steel.

[7] The term "lot" applies to all pipe of the same nominal size and wall thickness (or schedule) which is produced from the same heat of steel and subjected to the same finishing treatment in a continuous furnace; when final heat treatment is in a batch type furnace, the lot shall include only that pipe which is heat treated in the same furnace charge. When no heat treatment is performed following final forming operations, the lot shall include hot-rolled material only or cold-drawn material only.

Association as American Standard for Wrought Steel and Wrought Iron Pipe (ASA No. B36.10-1959). Copies of this American Standard are available from The American Society of Mechanical Engineers, 345 East 47th St., New York 17, N. Y.

(*b*) *Diameter.*—Variations in outside diameter shall not exceed the following:

Nominal Pipe Size, in.	Permissible Variations in Outside Diameter, in.	
	Over	Under
⅛ to 1½, incl.	1/64 (0.015)	1/32 (0.031)
Over 1½ to 4, incl.	1/32 (0.031)	1/32 (0.031)
Over 4 to 8, incl.	1/16 (0.062)	1/32 (0.031)
Over 8 to 18, incl.	3/32 (0.093)	1/32 (0.031)
Over 18 to 24, incl.	1/8 (0.125)	1/32 (0.031)

(*c*) *Thickness.*—The minimum wall thickness at any point shall not be more than 12.5 per cent under the nominal wall thickness specified.

NOTE.—The minimum wall thickness on inspection is shown in Table III (Appendix II).

Lengths

18. (*a*) All lengths, except for grades P2 and P12, shall be as stated in the order. No pipe shall be under the specified length and not more than ¼ in. over that specified.

(*b*) For grades P2 and P12, pipe lengths shall be in accordance with the following practice unless otherwise agreed upon between the manufacturer and the purchaser:

(*1*) Pipe 8 in. and under in nominal size shall be furnished as follows: Single random lengths shall be 12 to 22 ft; 5 per cent of the footage on an order may be in lengths of 6 to 12 ft. When ordered in double random lengths, the minimum length shall not be less than 22 ft, with an average for the order of 30 ft.

(*2*) Pipe over 8 in. shall be furnished as follows: Seventy-five per cent of the footage shall be within the length ranges shown in Appendix I and 25 per cent of the footage may be in greater lengths or shorter lengths down to 10 ft minimum.

(*c*) No jointers are permitted unless otherwise specified.

Ends

19. Unless otherwise specified, pipe shall be furnished with plain ends. All burrs at the ends of the pipe shall be removed.

Finish[8]

20. (*a*) The finished pipe shall be reasonably straight and free from injurious defects. At the discretion of the inspector representing the purchaser, finished pipe shall be subject to rejection if surface defects acceptable under Paragraph (*a*) are not scattered, but appear over a large area in excess of what is considered a workmanlike finish.

(*b*) *Depth of Injurious Defects.*—All defects shall be explored for depth. When the depth is in excess of 12½ per cent of the nominal wall thickness or encroaches on the minimum wall thickness, such defects shall be considered injurious.

(*c*) *Machining or Grinding Defects not Classified as Injurious.*—Surface defects not classified as injurious shall be treated as follows:

(*1*) Pipe showing scabs, seams, laps, tears, or slivers not deeper than 5 per cent of the nominal wall thickness need not have these defects removed. If deeper than 5 per cent, such defects shall be removed by machining or grinding.

(*2*) Pipe showing inside or outside surface checks (fish scale) 1/64 in. or less in depth need not have these defects removed. Such defects over 1/64 in. but not more than 1/32 in. in depth shall be removed by machining or grinding. Pipe on which these defects are more than 1/32 in. in depth shall be rejected, unless the manufacturer can demonstrate to the purchaser that the defects are not injurious as defined in Paragraph (*b*).

(*3*) Mechanical marks or abrasions[9] and pits shall be acceptable without grinding or machining provided the depth does not exceed the limitations set forth in Paragraph (*b*) and if not deeper than 1/16 in. If such defects are deeper than 1/16 in. but not deeper than 12½ per cent of the nominal wall thickness, they shall be removed by grinding or machining to sound metal.

(*4*) When defects have been removed by grinding or machining, the outside diameter at the point of grinding or machining may be reduced by the amount so removed. Should it be impracticable to secure a direct measurement, the wall thickness at the point of grinding, or at a defect not required to be removed, shall be determined by deducting the amount removed in grinding, or the depth of the defect, from the minimum measured wall thickness at the ends of the pipe, and the remainder shall not be less than 87.5 per cent of the nominal wall thickness.

(*5*) Machining or grinding shall follow the inspection at the mill of the pipe as rolled and shall be followed by supplementary visual inspection.

(*d*) *Repair by Welding.*—Repair of injurious defects shall be permitted only subject to the approval of the purchaser and with the further understanding that the composition of the welding rod shall be suitable for the composition of the metal being welded. Welding of injurious defects in no case shall be permitted when the depth of defect exceeds 33⅓ per cent of the nominal pipe wall thickness or the length of repair exceeds 25 per cent of the nominal diameter of the pipe. Defects shall be thoroughly chipped out before welding, and then heat-treated in accordance with Section 4. Each length of repaired pipe shall be retested hydrostatically in accordance with Section 11.

Marking

21. (*a*) Each length of pipe manufactured in accordance with these specifications shall be legibly marked, either by stencilling, stamping, or rolling, with the manufacturer's private identifying mark, with the designation A 335, the length, the hydrostatic test pressure, the grade, and an additional symbol S if the pipe conforms to the supplementary requirements specified in Paragraphs S1 to S7, the ASA schedule number, and the heat number or manufacturer's number by which the heat can be identified. Marking shall begin approximately 12 in. from end of each length. On pipe sizes larger than 4 in. the weight shall be given. On small diameter pipe which is bundled, the above information may be legibly stamped on a metal tag securely attached to each bundle. When pipe marked as specified in this section is rejected, the designation A 335 shall be cancelled.

(*b*) When it is specified that certain requirements of these specifications are to be completed by the purchaser upon receipt of the material, the manufacturer shall indicate that all requirements of the specifications have not been completed by a letter X, Y, or Z immediately following the specification number. This letter may be removed after completion of all requirements in accordance with these specifications. An explanation of specification requirements to be completed is provided in Section 22(*b*).

[8] Cupped and drawn pipe shall be cleaned by pickling or blasting prior to inspection. The generally roughened inside surface incident to the manufacture of cupped and drawn pipe and resulting from the removal of imbedded scale shall not be considered cause for rejection, providing the pipe meets the requirements for surface defects described in Section 20 (*a*), (*b*), and (*c*).

[9] Marks and abrasions are defined as cable marks, dinges, guide marks, roll marks, ball scratches, scores, die marks, etc.

Inspection

22. (*a*) The inspector representing the purchaser shall have free entry, at all times while work on the contract of the purchaser is being performed, to all parts of the manufacturer's works that concern the manufacture of the material ordered. The manufacturer shall afford the inspector, without charge, all reasonable facilities to satisfy him that the material is being furnished in accordance with these specifications.

All tests and inspection shall be made at the place of manufacture prior to shipment and at the manufacturer's expense, unless otherwise specified, and shall be so conducted as not to interfere unnecessarily with the operation of the works. When specified in the order, the manufacturer shall notify the purchaser in time so that he may have his inspector present to witness any part of the manufacture or tests that may be desired.

(*b*) *Certification.*—When agreed upon in writing between the manufacturer and the purchaser, a certification that the material conforms to the requirements of these specifications shall be the basis of acceptance of the material. Otherwise, the manufacturer shall report to the purchaser or his representative the results of the chemical analyses and mechanical tests made in accordance with these specifications. The certificate or report accomplished by the manufacturer shall include a statement of explanation for the letter added to the specification number (see Section 21(*b*)), when all the requirements of these specifications have not been completed. The purchaser must certify that all requirements of the specifications have been completed before removal of the letter X, Y, or Z.

Rejection

23. Each length of pipe that develops injurious defects during shop working or application operations will be rejected, and the manufacturer shall be notified. No rejections under these or any other specifications shall be marked as specified in Section 21 for sale under these specifications except where such pipe fails to comply with the weight requirements alone, in which case it may be sold under the weight specifications with which it does comply.

SUPPLEMENTARY REQUIREMENTS

S1. These requirements shall not be considered unless specified in the order, in which event the supplementary tests specified in Paragraphs S2 to S7 shall be made at the mill, unless otherwise agreed upon, at the purchaser's expense and witnessed by his inspector before shipment of the material.

Check Analysis

S2. Check analysis may be made on any length of pipe. Individual lengths failing to conform to the chemical requirements specified in Section 5 shall be rejected.

Transverse Tension Tests

S3. Transverse tension tests may be made on specimens from both ends of each length of pipe. This requirement applies only to pipe 8 in. and over in nominal diameter. If the specimen from either end of any length fails to meet the mechanical properties specified in Section 8, that length shall be rejected.

Flattening Test

S4. The flattening test specified in Section 10 may be made on specimens from both ends of each length of pipe. This requirement applies only to pipe over 2 in. in nominal diameter. Crop ends may be used. If the specimen from either end of any length fails to conform to the specified requirement, that length shall be rejected.

Metal Structure and Etching Tests

S5. The steel shall be homogeneous as shown by etching tests. Etching tests[10] may be made on transverse sections from any pipe, and shall show sound and reasonably uniform material, free from injurious laminations, cracks, and similar objectionable defects. If the specimen from either end of any length shows objectionable defects, one retest shall be permitted from that end. If this fails the length shall be rejected.

Photomicrographs

S6. When requested by the purchaser and so stated in the order, the manufacturer shall furnish one photomicrograph at 100 diameters from a specimen of pipe in the as-finished condition for each individual size and wall thickness from each heat, for pipe in nominal sizes 3 in. and over. Such photomicrographs shall be suitably identified as to pipe size, wall thickness, and heat. No photomicrographs for the individual pieces purchased shall be required except as specified in Paragraph S7. Such photomicrographs are for information only, to show the actual metal structure of the pipe as finished.

Photomicrographs for Individual Pieces

S7. In addition to the photomicrographs required in accordance with Supplementary Requirement S6, the purchaser may specify that photomicro-

[10] Pending development of etching methods applicable to the product covered by these specifications, it is recommended that the Recommended Practice for a Standard Macro Etch Test for Routine Inspection of Iron and Steel, described in the *Metals Handbook*, Am. Soc. for Metals, 1948 edition, p. 389, be followed.

graphs shall be furnished from each end of one or more pipes from each lot of pipe 3 in. and larger in the as-finished condition. The purchaser shall state in the order the number of pipes to be tested from each lot. When photomicrographs are required on each length, the photomicrographs from each lot of pipe in the as-finished condition which may be required under Supplementary Requirement S6 may be omitted. All photomicrographs required shall be properly identified as to heat number, size, and wall thickness of pipe from which the section was taken. Photomicrographs shall be further identified to permit association of each photomicrograph with the individual length of pipe it represents.

APPENDIX I

The following list constitutes the range of sizes and wall thicknesses of pipe in grades P2 and P12 which are generally obtainable.

For length ranges of pipe 8 in. and under in size, see Section 18 (*a*). The length ranges shown in the following table for pipe 10 in. and larger in size are representative of the present known capacities of the mills. See Section 18 (*a*) for details.

Nominal Pipe Size, in.	Outside Diameter, in.	Nominal Wall Thickness					
		Schedule 100		Schedule 120		Schedule 160	
		Wall Thickness, in.	Length Range, ft	Wall Thickness, in.	Length Range, ft	Wall Thickness, in.	Length Range, ft
⅛	0.840	...	...	...	...	0.187	...
¼	1.050	...	...	...	...	0.218	...
1	1.315	...	...	...	...	0.250	...
1¼	1.660	...	...	...	...	0.250	...
2	2.375	...	...	...	...	0.343	...
2½	2.875	...	...	...	...	0.375	...
3	3.500	...	...	...	...	0.438	...
4	4.500	...	...	0.438	...	0.531	...
6	6.625	...	...	0.562	...	0.718	...
8	8.625	0.593	...	...	...	0.906	...
10	10.750	0.718	25 to 30	...	...	1.125	15 to 25
12	12.750	0.843	20 to 30	...	...	1.312	15 to 25
14	14.000	0.937	20 to 30	...	...	1.406	15 to 25
16	16.000	1.031	18 to 30	...	...	1.593	10 to 25

APPENDIX II

TABLE III.—TABLE OF MINIMUM WALL THICKNESSES ON INSPECTION FOR NOMINAL (AVERAGE) PIPE WALL THICKNESSES.

NOTE 1.—The following formula, upon which this table is based, may be applied to calculate minimum wall thickness from nominal (average) wall thickness:

$$t_n \times 0.875 = t_m$$

where:
t_n = nominal (average) wall thickness in inches, and
t_m = minimum wall thickness in inches.

The wall thickness is expressed to three decimal places, the fourth decimal place being carried forward or dropped, in accordance with the Recommended Practices for Designating Significant Places in Specified Limiting Values (ASTM Designation: E 29).

NOTE 2.—This table is a master table covering wall thicknesses available in the purchase of different classifications of pipe, but it is not meant to imply that all of the walls listed therein are obtainable under this specification.

Nominal (Average) Thickness (t_n), in.	Minimum Thickness on Inspection (t_m), in.	Nominal (Average) Thickness (t_n), in.	Minimum Thickness on Inspection (t_m), in.	Nominal (Average) Thickness (t_n), in.	Minimum Thickness on Inspection (t_m), in.
0.068	0.060	0.294	0.257	0.750	0.656
0.088	0.077	0.300	0.262	0.812	0.710
0.091	0.080	0.307	0.269	0.843	0.738
0.095	0.083	0.308	0.270	0.864	0.756
0.113	0.099	0.312	0.273	0.875	0.766
0.119	0.104	0.318	0.278	0.906	0.793
0.125	0.109	0.322	0.282	0.937	0.820
0.126	0.110	0.330	0.289	0.968	0.847
0.133	0.116	0.337	0.295	1.000	0.875
0.140	0.122	0.343	0.300	1.031	0.902
0.145	0.127	0.344	0.301	1.062	0.929
0.147	0.129	0.358	0.313	1.093	0.956
0.154	0.135	0.365	0.319	1.125	0.984
0.156	0.136	0.375	0.328	1.156	1.012
0.179	0.157	0.382	0.334	1.218	1.066
0.187	0.164	0.400	0.350	1.250	1.094
0.188	0.164	0.406	0.355	1.281	1.121
0.191	0.167	0.432	0.378	1.312	1.148
0.200	0.175	0.436	0.382	1.343	1.175
0.203	0.178	0.437	0.382	1.375	1.203
0.216	0.189	0.438	0.383	1.406	1.230
0.218	0.191	0.500	0.438	1.438	1.258
0.219	0.192	0.531	0.465	1.500	1.312
0.226	0.198	0.552	0.483	1.531	1.340
0.237	0.207	0.562	0.492	1.562	1.367
0.250	0.219	0.593	0.519	1.593	1.394
0.258	0.226	0.600	0.525	1.750	1.531
0.276	0.242	0.625	0.547	1.781	1.558
0.277	0.242	0.656	0.574	1.812	1.586
0.279	0.244	0.674	0.590	1.968	1.722
0.280	0.245	0.687	0.601	2.062	1.804
0.281	0.246	0.718	0.629	2.343	2.050

SPECIFICATION FOR ALLOY STEEL SEAMLESS DRUM FORGINGS

SA-336

(IDENTICAL WITH ASTM SPECIFICATION A 336-61T)

Scope

1. (*a*) This specification covers forged alloy steel hollow drums and headers for use in pressure vessels and also alloy steel forgings for heads, covers, plugs, and other component parts for pressure vessels when forgings are desired for these parts.

(*b*) Fifteen classes are covered, including nine ferritic steels, and six austenitic steels. The maximum temperature at which the parts will operate shall be stated on the inquiry, contract and order.

(*c*) Forgings made of steel grades listed in the Specifications for Seamless Ferritic Alloy Steel Pipe for High-Temperature Service (ASTM Designation: A 335) may also be ordered under this specification. The chemical, tensile, heat treatment, and marking requirements of Specifications A 335 shall apply except the forgings shall conform to the chemical requirements of Table I of Specifications A 335 only with respect to ladle analysis. On check analysis they may deviate from these limits to the extent permitted in Table II of this specification, A 336. For "closed in" forgings the requirements of Section 11(*b*) of this specification shall apply.

(*d*) Supplementary requirements (Paragraphs S1 to S4) of an optional nature are provided. These shall apply only when specified by the purchaser.

Basis of Purchase

2. The purchaser shall specify in the inquiry, contract, and order, the class of steel desired; and any exceptions, modifications, or agreements with regard to the provisions of this specification.

Process

3. The steel shall be made by either or both of the following processes: open hearth or electric furnace.

Manufacture

4. (*a*) Large drum forgings shall be made from solid cast ingots, punched, bored or trepanned; or from hollow ingots cast in metal molds. Sufficient discard shall be cut from each end to insure that only sound metal enters the completed forging. The walls of the hollowed or hollow ingots shall be reduced in thickness at least one-half by forging on mandrels.

(*b*) Drum forgings with one solid closed end may be hollow forged in closed dies or on a draw bench, provided the metal is worked thoroughly.

(*c*) Drum forgings, either with open ends or one solid closed end, may also be produced by hot extrusion provided the metal is worked thoroughly.

(*d*) Small drum forgings may be made as solid forgings, subsequently bored, provided the purchaser agrees to this method of forging. The cross-sectional area of the solid forgings shall have a reduction by forging from that of the ingot in the ratio of not less than 3 to 1.

(*e*) Small sections or component parts of pressure vessels, which are to be subsequently assembled to form drums, may be made by expanding on a mandrel under a press or hammer, by hot extrusion or by ring rolling methods, provided the wall thickness is reduced at least one-half in the process.

(*f*) Where practical, large heads or covers shall be forged as disks, upset from blocks cut from ingots or billets.

Prolongations for Tests

5. Full size prolongations for tests shall be provided on each end of each drum forging produced by the method described in Section 4(*a*), and on one end, only if drum forgings, sections or component parts are produced by the methods described in Section 4(*b*), (*c*), (*d*), or (*e*). In the latter case the prolongation shall be on the end nearest the top of the ingot. For heads or covers an extension for tests shall be provided on the outside diameter or on the width or thickness of each forging.

Machining

6. (*a*) Forged pressure vessels for power boilers and for other services if specified shall have the inner surfaces machined. Pressure vessels for other services shall have the inner surfaces sufficiently free from scale to permit inspection, unless otherwise specified.

(*b*) When rough machining is performed it may be done either prior to or after heat treatment at the option of the manufacturer, unless specified in accordance with Supplementary Requirement S2.

(*c*) The finish of the outer surfaces, unless otherwise specified (see Supplementary Requirement S3), shall be at the option of the manufacturer.

Heat Treatment

7. (*a*) All forgings shall receive a heat treatment proper to their design and chemical composition.

(*b*) Unless otherwise agreed on (See Supplementary Requirement S2), the sequence of operations, including heat treatment, shall be at the option of the manufacturer.

(*c*) The ferritic steels shall be either annealed or normalized and tempered, at the manufacturer's option. The tempering temperature shall be below the transformation range but at least 100 F above the service temperature. In no case shall the tempering temperature be lower than 850 F and for class F 6 the minimum tempering temperature shall be 1150 F.

(*d*) The austenitic steels shall receive a carbide solution treatment which shall consist of holding the forgings for a sufficient time at a temperature at which the chromium carbides will go into solution and then cooling in air or liquid medium at a rate sufficient to prevent reprecipitation. When specified, classes F8c and F8t shall receive a stabilization treatment which shall consist of holding the forging at 1500 F to 1600 F for not less than 2 hr per in. of thickness and then cooling in the furnace or in air.

(*e*) *Cooling Prior to Heat Treatment.*—After forging and before reheating for heat treatment, forgings of ferritic classes shall be allowed to cool in a manner to prevent injury and to accomplish transformation.

TABLE I.—CHEMICAL REQUIREMENTS

Type	Ferritic Steels				
Class	F1	F2	F5[a]	F5a[a]	F6
Carbon, per cent	0.20 to 0.30	0.10 to 0.20	0.15 max	0.25 max	0.12 max
Manganese, per cent	0.60 to 0.80	0.30 to 0.80	0.30 to 0.60	0.60 max	1.00 max
Phosphorus, max, per cent	0.040[b]	0.040[b]	0.030	0.040	0.040
Sulfur, max, per cent	0.040[b]	0.040[b]	0.030	0.030	0.030
Silicon, per cent	0.20 to 0.35	0.10 to 0.60	0.50 max	0.50 max	1.00 max
Nickel, per cent	...	...	0.50 max	0.50 max	0.50 max
Chromium, per cent	...	0.80 to 1.10	4.0 to 6.0	4.0 to 6.0	11.5 to 13.5
Molybdenum, per cent	0.40 to 0.60	0.45 to 0.65	0.45 to 0.65	0.45 to 0.65	...

Class	F22	F30	F31	F32
Carbon, per cent	0.15 max	0.45 max	0.35 max	0.35 max
Manganese, per cent	0.30 to 0.60	0.50 to 0.90	0.50 to 0.90	0.50 to 0.90
Phosphorus, max, per cent	0.030[b]	0.040[b]	0.040[b]	0.040[b]
Sulfur, max, per cent	0.030[b]	0.040[b]	0.040[b]	0.040[b]
Silicon, per cent	0.50 max	0.15 to 0.45	0.10 to 0.40	0.15 to 0.45
Nickel, per cent	...	...	2.25 to 3.00	0.50 to 1.00
Chromium, per cent	2.00 to 2.50	...	...	3.00 to 3.60
Molybdenum, per cent	0.90 to 1.10	0.30 to 0.60	0.20 to 0.50	0.30 to 0.50
Vanadium, per cent	...	0.10 to 0.25	0.15 max	0.05 to 0.15

Type	Austenitic Steels		
Class	F8	F8m	F8c
Carbon, per cent	0.08 max	0.08 max	0.08 max
Manganese, per cent	2.00 max	2.00 max	2.00 max
Phosphorus, max, per cent	0.040	0.040	0.040
Sulfur, max, per cent	0.030	0.030	0.030
Silicon, per cent	1.00 max	1.00 max	0.85 max
Nickel, per cent	8.00 to 11.00	10.00 to 14.00	9.00 to 12.00
Chromium, per cent	18.00 to 20.00	16.00 to 18.00	17.00 to 19.00
Molybdenum, per cent	...	2.00 to 3.00	...
Columbium, per cent	...	...	[c]
Titanium, per cent	...	...	...

Class	F8t	F10	F25
Carbon, per cent	0.08 max	0.10 to 0.20	0.15 max
Manganese, per cent	2.50 max	0.50 to 0.80	2.00 max
Phosphorus, max, per cent	0.035	0.030	0.040
Sulfur, max, per cent	0.030	0.030	0.030
Silicon, per cent	0.85 max	1.00 to 1.40	1.00 max
Nickel, per cent	9.00 min	19.00 to 22.00	19.00 to 22.00
Chromium, per cent	17.00 min	7.00 to 9.00	24.00 to 26.00
Molybdenum, per cent	...	...	...
Columbium, per cent	[d]	...	...
Titanium, per cent	[d]	...	...

[a] The present class F5a (0.25 per cent, max carbon) previous to 1955 was assigned the identification symbol F5. Identification symbol F5 has been assigned to the 0.15 per cent, max, carbon class to be consistent with ASTM specifications for other products such as pipe, tubing, bolting, welding fittings, etc.

[b] When acid open hearth steel is used, the maximum permissible phosphorus and sulfur contents shall be 0.050 per cent for classes F1, F2, F30, F31, and F32, and 0.040 per cent for class F22.

[c] Class F8c shall have a columbium content of not less than ten times the carbon content and not more than 1.00 per cent. (Alternately, tantalum may be substituted for part of the columbium as approved.)

[d] Class F8t shall have a titanium content of not less than five times the carbon content and not more than 0.60 per cent.

Chemical Composition

8. The steel shall conform to the requirements as to chemical composition prescribed in Table I, or to other chemical composition requirements as specified in the order or as agreed upon.

Ladle Analysis

9. (*a*) An analysis of each heat of steel shall be made by the manufacturer to determine the percentages of the elements specified in Section 8. This analysis shall be made from a test specimen taken during the pouring of the heat. The chemical composition thus determined shall be reported to the purchaser or his representative and, except as specified in Paragraph (*b*), shall conform to the requirements specified in Section 8.

(*b*) In the case of large ingots poured from two or more heats, the weighted average of the chemical determinations of the several heats, made in accordance with Paragraph (*a*), shall conform to the requirements specified in Section 8.

Check Analysis

10. An analysis may be made by the purchaser from a forging, representing each heat except in the case of multiple heat forgings (see Section 9 (*b*)). Samples for analysis may be taken from the forging or from a full size prolongation,

TABLE II.—PERMISSIBLE VARIATIONS IN CHECK ANALYSIS.

Element	Limit or Maximum of Specified Range, per cent	Permissible Variation Over the Maximum Limit or Under the Minimum Limit, per cent			
		200 sq in. and under	Over 200 to 400 sq in., incl	Over 400 to 800 sq in., incl	Over 800 to 1600 sq in., incl
Carbon	0.25 and under	0.02	0.03	0.04	0.05
	Over 0.25	0.03	0.04	0.05	0.06
Manganese	0.90 and under	0.04	0.05	0.06	0.07
	Over 0.90	0.05	0.06	0.07	0.08
Phosphorus	0.03 and under	0.005	0.005	0.005	0.005
	Over 0.03	0.010	0.010	0.010	0.015
Sulfur	0.030 and under	0.005	0.005	0.005	0.005
	Over 0.03	0.010	0.010	0.010	0.015
Silicon	0.35 and under	0.02	0.03	0.04	0.04
	Over 0.35	0.06	0.06	0.07	0.07
Nickel	1.00 and under	0.03	0.03	0.03	0.03
	Over 1.00 to 2.00, incl	0.05	0.05	0.05	0.05
	Over 2.00 to 5.30, incl	0.07	0.07	0.07	0.07
	Over 5.30 to 10.00, incl	0.10	0.10	0.10	0.10
	Over 10.00 to 22.00, incl	0.15	0.15	0.15	0.15
Chromium	0.90 and under	0.04	0.04	0.05	0.05
	Over 0.90 to 2.10, incl	0.06	0.06	0.07	0.07
	Over 2.10 to 10.00, incl	0.10	0.12	0.14	0.16
	Over 10.00 to 15.00, incl	0.15	0.15	0.17	0.19
	Over 15.00 to 20.00, incl	0.20	0.20	0.22	0.24
	Over 20.00	0.25	0.25	0.27	0.29
Molybdenum	1.00 and under	0.04	0.05	0.06	0.07
	Over 1.00 to 1.75, incl	0.05	0.06	0.07	0.08
Vanadium	0.25 and under	0.02	0.02	0.02	0.03
Columbium		0.05	0.05	0.05	0.05
Titanium		0.05	0.05	0.05	0.05

TABLE III.—TENSILE REQUIREMENTS.

Type	Ferritic Steels								
Class	F1	F2	F5	F5a	F6	F22	F30	F31	F32
Tensile strength, min, psi	70 000	70 000	60 000	80 000	75 000	70 000	80 000	95 000	100 000
Yield strength (0.2 per cent offset), min, psi	40 000	40 000	36 000	50 000	45 000	40 000	50 000	70 000	60 000
Elongation in 2 in., min, per cent:									
Tangential	20	18	19	19	18	18	21	18	18
Reduction of area, min, per cent:									
Tangential	30	25	35	35	35	25	35	35	35

Typ	Austenitic Steels					
Class	F8	F8m	F8c	F8t	F10	F25
Tensile strength, min, psi	70 000	70 000	70 000	70 000	80 000	75 000
Yield strength (0.2 per cent offset), min, psi	30 000	30 000	30 000	30 000	30 000	30 000
Elongation in 2 in., min, per cent:						
Tangential	30	30	30	30	25	30
Reduction of area, min, per cent:						
Tangential	35	35	35	35	35	35

at any point midway between the inner and outer surfaces, or from the test specimen. The chemical composition thus determined shall not vary from the requirements specified in Section 8 by more than the amounts prescribed in Table II.

Mechanical Properties

11. (*a*) The material shall conform to the requirements as to mechanical properties prescribed in Table III, when tested in accordance with the latest issue of the Methods and Definitions for Mechanical Testing of Steel Products (ASTM Designation: A 370).

(*b*) Except as specified herein, tests for acceptance shall be made after final heat treatment of the forgings. When the ends of drums are closed in by reforging after machining, the drums may be treated and tested prior to reforging if the treatment consists of annealing, or of normalizing and tempering, or of stabilizing. After reforging, the whole of the forging shall be simultaneously re-treated. If the original treatment was annealing, the re-anneal shall be above the transformation range but not above the temperature of the first anneal. If the original treatment was normalizing and tempering, or stabilizing, the re-treatment shall be identical with the original.

Test Specimens

12. (*a*) One tension test specimen shall be taken from each full size prolongation as prescribed in Section 5 after heat treatment as prescribed in Section 11(*b*). The axis of the specimen shall be located midway between the inner and outer surfaces of the wall. When specimens are required from opposite ends they shall be taken from the diagonal corners of an axial plane. Unless otherwise specified or agreed upon, the tension test specimens shall be taken in a tangential direction.

(*b*) One tension test specimen shall be taken to represent each single or multiple cover or head forging. Unless otherwise specified, the axis of the specimen shall be located at any point midway between the parallel surfaces of the test extension if added to the periphery, or shall be located at any

point midway between the center and surface of solid forgings and at any point midway between the inner and outer surface of the wall of a hollow or bored forging. Unless otherwise specified the tension test specimens shall be taken in a tangential direction.

(*c*) The number and location of the tests from forgings made for other parts, or attachments to seamless drum forgings made to this specification shall be a matter of agreement between the purchaser and the manufacturer.

(*d*) The tension test specimens shall be machined to conform to the standard round tension test specimen with 2-in. gage length as specified in the latest issue of Methods A 370.

Number of Tests

13. Two tension tests shall be made from each drum forging except for those drum forgings or component parts having one prolongation for tests as covered in Section 5, in which case one tension test only shall be made. One tension test shall be made from each cover or head forging.

Retests

14. (*a*) If the results of the mechanical tests of any forging do not conform to the requirements specified, the manufacturer may re-treat the forging (reaustenitize followed by one or more tempering cycles), but not more than three additional times. Retests shall be made in accordance with Section 13.

(*b*) If the results of the mechanical tests of any forging do not conform to the requirements specified because a flaw develops in the test specimen during testing, a retest shall be allowed if the defect is not caused by ruptures, cracks or flakes in the steel.

Workmanship

15. (*a*) The forgings shall conform to the sizes and shapes specified by the purchaser.

(*b*) The thickness of the parallel walls of each forging shall not be less than that specified. If the thickness of a portion of the wall of the forging is less than that specified, due to accidental or unavoidable irregularity, the forgings may be accepted by the purchaser, provided that such irregularity will not require lowering the allowable working pressure below that for which the drum is designed.

Repair Welding

16. Repair welding shall be permitted when mutually agreed upon between the manufacturer and the purchaser and shall be performed in accordance with all the requirements of Part UF of Section VIII of the ASME Boiler and Pressure Vessel Code.

Marking

17. Each drum forging shall be legibly stamped by the manufacturer at each end with the name of the manufacturer, the manufacturer's test identification number, the identification number A 336, and the minimum tensile strength for the class of forging specified, except that those forgings having only one test prolongation may be so stamped on one end only. The manufacturer's test identification number shall be legibly stamped on each test specimen.

Inspection

18. The inspector representing the purchaser shall have free entry, at all times while work on the contract of the purchaser is being performed, to all parts of the manufacturer's works which concern the manufacture of the material ordered. The manufacturer shall afford the inspector, without charge, all reasonable facilities to satisfy him that the material is being furnished in accordance with this specification. All tests (except check analysis) and inspection shall be made at the place of manufacture prior to shipment, unless otherwise specified, and shall be so conducted as not to interfere unnecessarily with the operation of the works.

Rejection

19. (*a*) Any forging having injurious defects observed prior or subsequent to acceptance at the manufacturer's works shall be subject to rejection.

(*b*) Unless otherwise specified, any rejection based on tests made in accordance with Section 10 shall be reported to the manufacturer within 60 days from the receipt of samples by the purchaser.

Rehearing

20. Samples tested in accordance with Section 10 that represent rejected material shall be retained for 60 days from the date of the test report. In case of dissatisfaction with the results of the tests, the manufacturer may make claim for rehearing within that time.

SUPPLEMENTARY REQUIREMENTS

One or more of the following supplementary requirements shall apply only when specified by the purchaser in the inquiry, contract, and order. Details of these supplementary requirements shall be agreed upon by the manufacturer and the purchaser.

Grain Size

S1. When forgings of ferritic steels are to be subjected to temperatures above 800 F, the McQuaid-Ehn grain size of the steel shall be 1 to 5 or alternately, the aluminum addition shall not exceed ½ lb. per ton.

NOTE.—For determining grain size, reference should be made to the latest issue of the Methods for Estimating the Average Grain Size of Metals (ASTM Designation: E 112).

Rough Turning and Boring

S2. The position of the rough turning and boring in the sequence of manufacturing operations may be a matter of agreement between the manufacturer and the purchaser.

Surface Finish

S3. The inner, outer, or both surfaces of integrally forged vessels shall be machined.

Hydrostatic Test

S4. A hydrostatic pressure test shall be applied.

SPECIFICATION FOR FORGED OR ROLLED CARBON AND ALLOY STEEL FLANGES, FORGED FITTINGS, AND VALVES AND PARTS FOR LOW-TEMPERATURE SERVICE

SA-350

(IDENTICAL WITH ASTM SPECIFICATION A 350-61T)

Scope

1. This specification covers carbon and alloy steel forged or rolled flanges, forged fittings, valves and parts intended for low-temperature service (Notes 1 and 2). The term "forgings" used in this specification is intended to cover one or all of the products mentioned above, either forged or rolled.

NOTE 1.—This specification is based on experience with forgings up to 5 in. in thickness for low-temperature service. Thicker sections may require negotiation.

NOTE 2.—Because the austenitic stainless grades furnished in accordance with the Specifications for Forged or Rolled Alloy Steel Pipe Flanges, Forged Fittings, and Valves and Parts for High-Temperature Service (ASTM Designation: A 182) exhibit no significant loss of Charpy impact strength at temperatures as low as −325 F, they are being used without the necessity for conducting impact tests and are therefore not included in this specification.

Process

2. The steel shall be made by either or both of the following processes: open-hearth, or electric furnace. It shall be manufactured in accordance with recognized melting practices necessary to produce steel which shall meet the requirements of this specification.

Discard

3. A sufficient discard shall be made from each ingot to secure freedom from injurious piping and undue segregation.

Manufacturing Practice

4. (*a*) Material for forgings shall consist of ingots or either forged or rolled blooms, billets, slabs, or bars. Such rolled or forged material shall be cut to the required length by a process that will not produce injurious defects in the product.

(*b*) The material shall be forged by hammering, pressing, rolling, extruding, or upsetting and shall be brought as nearly as practicable to the finished shape and size by hot working and shall be so processed as to cause metal flow during the hot-working operation in the direction most favorable for resisting the stresses encountered in service.

(*c*) When specified in the order, a sample forging may be sectioned and etched to show flow lines and the condition as regards internal imperfections. In such cases, the question of acceptable and unacceptable character of metal flow shall be subject to agreement between the manufacturer and the purchaser.

(*d*) When specified in the order, the manufacturer shall submit for approval of the purchaser a sketch showing the shape of the rough forging before machining.

Heat Treatment

5. (*a*) All forgings shall be furnished in the normalized, or normalized and tempered, or quenched and tempered (Note 3) condition. For Grade LF4 the recommended normalizing temperature shall be 1650 F.

NOTE 3.—When the part is to be used in the fabrication of a welded pressure vessel complying with the rules of the Unfired Pressure Vessel Section of the ASME Boiler and Pressure Vessel Code, the quenched and tempered heat treatment shall be an accelerated cooling and tempering procedure to provide a structure comparable to that obtained in thin sections by normalizing.

(*b*) Material from which mechanical test specimens are obtained shall be in the same condition of heat treatment as the forgings represented.

Chemical Composition

6. The material shall conform to the requirements as to chemical composition prescribed in Table I.

Ladle Analysis

7. An analysis of each heat of steel shall be made by the manufacturer to determine the percentages of the elements prescribed in Table I.

Check Analysis

8. An analysis may be made by the purchaser from one forged or rolled flange, fitting, valve or part, or from broken test specimens representing each heat. Samples for analysis may be taken insofar as practical at any point midway between the center and surface when solid or midway between the inner and outer surfaces of a bored or hollow forged part but in no instance less than ¼ in. beneath the surface of a forging or samples may be taken from the broken test specimens. The chemical composition thus determined shall conform to the requirements prescribed in Table I.

Tensile Properties

9. (a) The material shall conform to the requirements as to tensile properties prescribed in Table II.

(*b*) The material shall be tested in accordance with the latest issue of the Methods and Definitions for Mechanical Testing of Steel Products (ASTM Designation: A 370).

TABLE I.—CHEMICAL REQUIREMENTS.

Elements	Grade LF1	Grade LF2	Grade LF3	Grade LF4
Carbon, max, per cent	0.30	0.30	0.20	0.12
Manganese, per cent	1.06 max	1.35 max	0.90 max	0.55 to 1.00
Phosphorus, max, per cent	0.04	0.04	0.04	0.04
Sulfur, max, per cent	0.05	0.05	0.04	0.04
Silicon, per cent	...	0.15 to 0.30	0.15 to 0.35	0.10 to 0.35
Nickel, per cent	...	...	3.25 to 3.75	0.50 to 0.95
Chromium, per cent	...	...	...	0.50 to 0.95
Copper, per cent	...	...	...	0.40 to 0.75
Aluminum, per cent	...	...	...	0.04 to 0.30

Impact Properties

10. (*a*) The material shall conform to the requirements as to impact properties prescribed in Table III when tested in accordance with the requirements of Section 11. Three impact specimens shall constitute a set.

(*b*) When the average value of the three impact specimens equals or exceeds the minimum value permitted for a single specimen and the value for more than one specimen is below the required average value, or the value for one specimen is below the minimum value permitted for a single specimen, a retest of three additional specimens shall be made, each of which retest specimens must equal or exceed the required average value.

TABLE II.—TENSILE PROPERTIES AT ROOM TEMPERATURE.

	Grades LF1 and LF4	Grade LF2	Grade LF3
Tensile strength, min, psi	60 000	70 000	70 000
Yield point or yield strength, min, psi	30 000	36 000	40 000
Elongation in 2 in., min, per cent	25	22	25
Reduction of area, min, per cent	38	30	50

TABLE III.—IMPACT REQUIREMENTS.

Size of Specimen, mm	Minimum Impact Value Required for Average of Each Set of Three Specimens, ft-lb	Minimum Impact Value Permitted for One specimen only of a Set, ft-lb
10 by 10	15	10
10 by 7.5	12.5	8.5
10 by 5	10	7.0
10 by 2.5	5	3.5

Impact Test

11. (*a*) The notched bar impact test shall, as far as applicable, be made in accordance with the procedure for the simple beam Charpy type test as described in the latest issue of the Methods and Definitions for Mechanical Testing of Steel Products (ASTM Designation: A 370), using specimens of types B and C of Fig. 11.

(*b*) An impact test shall consist of breaking three specimens. The temperature of test shall be as follows:

Grade	Temperature of Impact Test, deg Fahr
LF1 and LF2	−50
LF3	−150
LF4	−150

(*c*) Forgings furnished under these specifications shall be tested at temperatures at least as low as shown in Paragraph (*b*) excepting that special tests on individual lots of forgings may be conducted at other reported temperatures as may be mutually agreed upon between the manufacturer and the purchaser. Such tests shall be consistent with the intended service temperature of the equipment and such forgings shall be suitably marked to identify the reported temperature of test.

(*d*) When conducting impact tests the impact test specimens as well as the handling tongs shall be cooled a sufficient time in a suitable container so that both reach the desired temperature. The temperature shall be measured with thermocouples, thermometers, or any other suitable devices and shall be controlled within ±3 F. The specimens shall be quickly transferred from the cooling device to the anvil of the Charpy impact testing machine and broken with a time lapse of not more than 5 sec.

Test Specimens

12. (*a*) The tension or impact test shall represent all forgings from the same heat and heat-treatment load whose maximum thicknesses do not differ from that of the test block or test forging by more than ±50 per cent or 1½ in., whichever is less, except that forged flanges and tube sheets thicker than 5½ in. may be qualified from a 4-in. test block. The tension or impact test specimens may be machined from a rough or finished production forging, or prolongation thereof, or from special forged blocks suitably worked and heat treated. Such special blocks shall be obtained from the ingot, slab, or billet and reduced by forging in a manner similar to that for the products to be represented. The maximum reduction for a special test block shall not exceed the minimum reduction of forgings to be represented by the particular test block. The manufacturer shall provide the necessary extra forging or test block.

(*b*) Unless otherwise specified, the test specimens, if cut from a forging, shall have their longitudinal axes located at any point midway between the parallel surfaces of the test extension if added to the periphery or shall be located at any point midway between the center and surface of solid forgings and at any point midway between the inner and outer surfaces of the wall of a hollow or bored forging.

(*c*) Test specimens shall be obtained so that the longitudinal axis of the specimen is parallel to the direction of grain flow, while the axis of the drilled hole (or ground slot) in an impact test specimen shall be perpendicular to the surface.

(*d*) The tension test specimens taken from the forgings or special forged blocks shall be machined to the form and dimensions shown in Figs. 6 or 7 of Methods A 370. In the case of small sections which will not accommodate the specimens in the form shown in Fig. 6, the specimen shall be as large as practicable in accord with Fig. 7.

(*e*) Standard size specimens, 10 by 10 mm in cross-section shall be used for the impact test excepting where the material is of insufficient thickness to permit their use, in which case the largest obtainable size specimens as shown in Table III shall be used. When sub-size specimens are necessary, the reduced dimension shall be in the direction parallel to the axis of the drill for the keyhole type or parallel to the base of the notch for the milled type.

(*f*) When so specified in the order, the test specimens shall be stress relieved. Stress relieving shall be done before machining the test specimens from the heat-treated test piece secured from one of the sources listed in Paragraphs (*a*) and (*b*). The test piece shall be gradually and uniformly heated to the prescribed temperature, held at that temperature for a period of time in accordance with Table IV, and furnace cooled to a temperature not exceeding 600 F.

TABLE IV.—STRESS-RELIEVING REQUIREMENTS.

Grade	Metal Temperature, deg Fahr	Minimum Holding Time, hr per in. of thickness[a]
LF1, LF2, and LF3[b]	1100	1
	1050	2
	1000	3
	950	5
	900	10
LF4[b]	1150	1
	1100	2
	1050	3

[a] For intermediate temperature, the holding time shall be determined by straight line interpolation.

[b] Unless otherwise specified, the recommended stress-relieving temperature for grades LF1, LF2, and LF3 shall be 1100 F and, for grade LF4 it shall be 1150 F.

Number of Tests

13. (*a*) One or more tension tests at room temperature and one or more impact tests (that is, three specimens each) at the temperature specified shall be made from each heat in each heat-treatment load.

(*b*) If heat treatment is performed in either a continuous or a batch-type furnace controlled within a range of 50 F and equipped with recording pyrometers so that complete records of heat treatment are available, then one or more tension and only one or more impact tests from each heat in a continuous run shall be required instead of one or more tests from each heat in each heat-treatment load.

(*c*) The total number of tests shall be the minimum number required to meet the thickness requirements specified in Section 12(*a*).

Retests

14. (*a*) If the results of the mechanical tests or retests of any test lot do not conform to the requirements specified, the manufacturer may reheat treat such lots but not more than twice except with the approval of the purchaser on the basis of satisfactory metallurgical evidence that the cause of the failure of the test is curable and the quality of the material is satisfactory. Retests shall be made as provided for in this specification.

(*b*) Any specimens showing defects while being machined or prior to testing may be discarded and replacements shall be considered as original specimens. When an erratic result is caused by a defective specimen, or there is uncertainty in test procedure, a retest shall be allowed.

Workmanship and Finish

15. The forgings shall have a workmanlike finish and shall be free from injurious defects.

Marking

16. Identification marks shall be legibly stamped on each forging. When so stated on the order that identification stamps are objectionable and detrimental to the forgings, the marks may be painted or stenciled on the forgings or stamped on a metal tag which shall be attached to the forgings in such manner as may be agreed upon between the manufacturer and the purchaser.

Inspection

17. (*a*) The inspector representing the purchaser shall have free entry, at all times while work on the contract of the purchaser is being performed, to all parts of the manufacturer's works that concern the manufacture of the material ordered. The manufacturer shall afford the inspector, without charge, all reasonable facilities to satisfy him that the material is being furnished in accordance with this specification. All tests (except check analysis) and inspection shall be made at the place of manufacture prior to shipment, unless otherwise specified, and shall be so conducted as not to interfere unnecessarily with the operation of the works.

(*b*) *Certification.*—When agreed upon in writing between the manufacturer and the purchaser, a certification that the material conforms to the requirement specified may be the basis of acceptance of the material. Otherwise, the manufacturer shall report to the purchaser or his representative the heat treatments applied to the material and to the test blocks and the results of the chemical analysis and mechanical tests made in accordance with this specification.

(*c*) Parts heat treated by quenching and tempering (includes accelerated cooling and tempering) shall be subsequently inspected for injurious defects on all surfaces by magnetic powder method.

Rejection

18. (*a*) Unless otherwise specified, any rejection based on tests made in accordance with Section 8 shall be reported to the manufacturer within twelve working days from the receipt of samples or test reports by the purchaser.

(*b*) Each forging in which injurious metal defects are exposed during subsequent machining or shop working shall be rejected and the manufacture notified. Where such defect occurs the purchaser may conduct at his own expense such tests as may be necessary to demonstrate the acceptability of the balance of the lot. At the purchaser's discretion if 10 per cent of the forgings in any lot fail such tests, the entire lot may be rejected.

Rehearing

19. Specimens tested in accordance with this specification that represents rejected material shall be preserved for two weeks from the date of the test report. In case of dissatisfaction with the results of the tests, the manufacturer may make claim for a rehearing within that time.

APPENDIX I

Explanation of the Use of Notched Bar Impact Tests in Determining the Acceptability of Steels for Low-Temperature Service

A1. Years of experience and test work have shown that some materials, particularly ferritic steels, change from tough to brittle behavior with a decrease in temperature. The transition temperatures and the levels of notch toughness vary with different materials, depending on many factors. When materials are used under conditions where brittle behavior may occur, there is danger that flaws, which would be considered non-hazardous if the material were tough, may propagate to disastrous failure of the equipment.

A2. Accordingly, many varieties of tests have been developed in an effort to evaluate the toughness of materials and the conditions under which they will transform from tough to brittle behavior. There are many opinions and shadings of opinion as to which test is most suitable for evaluating the suitability of materials for service at low temperatures; however, as yet, only the Charpy impact test has received sufficient general acceptance and has been used as a basis for purchasing for sufficient time to be included in ASTM standards. Furthermore, this test is required for low-temperature equipment constructed in accordance with the ASME Code for Unfired Pressure Vessels and the American Standard Code for Pressure Piping (ASA No. B 31.1—1955). These ASTM specifications for materials for low-temperature service are primarily used in piping and pressure vessel construction which are subjected to temperatures lower than ambient and consequently the notched bar impact test requirements are written to provide material which in quality and by its testing can be validated for use under these construction codes.

A3. No assurance is offered that compliance with these requirements will provide a material which will resist brittle failure under all possible conditions of service to as low as the specified impact test temperature. It may eventually be possible that other types of tests will provide greater assurance of material suitability for low-temperature services, but at this time there is insufficient knowledge for agreement and general acceptance of some test other than the Charpy impact test.

A4. Attention is directed to the following subjects which have a bearing on the value of Charpy impact tests:

(*a*) Much of the original work in the field of notch toughness was done on wrought materials which had definite directional grain flow parallel to the axis of the bar, and the specimens were taken with the longitudinal axis of the specimen parallel to the axis of the bar. It has been well established that the results from impact testing of the same piece of steel may vary considerably, depending upon the orientation of the specimen to the direction of grain flow. Although it is known that specimens taken with their axis transverse to the direction of grain flow will have lower values depending on the amount of cross rolling or forging the material has received, there were insufficient test data to permit specific mandatory requirements on the impact properties of wrought materials determined in any direction other than parallel to the direction of grain flow. Except in special cases this limitation still exists.

(*b*) It is acknowledged that notched bar impact tests are of a qualitative rather than a quantitative nature. As yet, except possibly for ship steel, no satisfactory correlation has been possible between tests on small standardized specimens and the behavior of a structural part under any given conditions of loading in service. The required value of 15 ft-lb as determined by the keyhole Charpy impact test is an arbitrary value which can be met by carbon and low-alloy constructional steels when tested at temperatures above that where their behavior changes from tough to brittle as judged by this test. The acceptability of this dividing line seems to be justified by service experience on carbon and certain low-alloy steels.

(*c*) The literature shows that notched bar impact strength in constructional steels differs widely in accordance with many variables. Consequently, there is bound to be some discrepancy between an individual test bar and the entire part which it represents. No system of test bar selection can guarantee that every sample would meet minimum requirements. Test bar selection must be a compromise to generally represent the product.

(*d*) The committees responsible for these material specifications have had as an objective the selection of test specimens which will represent the properties of the materials in the form in which they will be used. However, accomplishment of this objective has only partially been realized. At this time it is impossible to select samples for testing that will represent all parts and sizes of the product involved. Particularly in ferritic steels it is impractical to remove the test bars from heavy sections over about 4 in. and expect them to show results as high as tests from light sections of the same material. The practical commercial limits on the amount of testing possible, as well as limits to knowledge of what results may be expected from testing in non-standard locations, have been considered in drafting these specifications. With time and increased knowledge it may be possible to require more representative testing.

SPECIFICATION FOR FERRITIC AND AUSTENITIC STEEL CASTINGS FOR HIGH-TEMPERATURE SERVICE

SA-351

(IDENTICAL WITH ASTM SPECIFICATION A 351-61T EXCEPT THAT GRADE CF3M HAS BEEN DELETED)

Scope

1. (*a*) These specifications cover ferritic and austenitic steel castings for valves, flanges, fittings, and other pressure containing parts (Note 1) intended for high-temperature and corrosive service (Note 2).

NOTE 1.—Carbon steel castings for pressure containing parts are covered by Specifications for Carbon-Steel Castings Suitable for Fusion Welding for High-Temperature Service (ASTM Designation: A 216) and low alloy steel castings by the Specifications for Alloy Steel Castings for Pressure Containing Parts Suitable for High-Temperature Service (ASTM Designation: A 217).

NOTE 2.—The committee formulating these specifications has included 11 grades of materials extensively used for the present purpose. It is not the intent that these specifications should be limited to these grades. Other compositions will be considered for inclusion by the committee as the need arises. Since these grades possess varying degrees of suitability for high temperature and corrosion resistant service, it is the responsibility of the purchaser to determine which grade shall be furnished, due consideration being given to the requirements of the applicable construction codes.

(*b*) One grade of ferritic and nine grades of austenitic steel castings are included in these specifications. Selection will depend on design and service conditions, mechanical properties, and the high-temperature and corrosion-resistance characteristics.

Process

2. The steel shall be made by the electric furnace or by any other process approved by the purchaser.

Heat Treatment

3. (*a*) All castings shall receive a heat treatment proper to their design and chemical composition.

(*b*) Heat treatment shall be performed before machining except in instances when reheat-treatment is necessary. Unless the method of heat treatment is specified by the purchaser, thus becoming a matter of agreement with the manufacturer, the heat treatment shall be as specified in Paragraphs (*c*) and (*d*).

(*c*) The heat treatment of the ferritic grade (grade CA15) shall consist of heating to 1750 F, minimum, air cooling, and tempering at a minimum temperature of 1100 F.

(*d*) Unless otherwise specified the heat treatment of the austenitic grades shall consist of a carbide solution treatment as follows: the carbide solution treatment for austenitic steel castings shall consist of holding the castings for a sufficient length of time at a temperature where chromium carbides will go into solution and then cooling in air or liquid medium at a rate to prevent reprecipitation.

Temperature Control

4. Furnace temperature for heat treating shall be effectively controlled with pyrometers.

Chemical Composition

5. The steel shall conform to the requirements as to chemical composition prescribed in Table I.

TABLE I.—CHEMICAL REQUIREMENTS.

Grade	CA15	CF3	CF8	CF8M	CF8C	CH8	CH20 or CH10[a]	CK45	CT35	CF10MC
Carbon, max, per cent	0.15	0.03	0.08	0.08	0.08	0.08	0.20[a]	0.20 to 0.45	0.35	0.10
Manganese, max, per cent	1.00	1.50	1.50	1.50	1.50	1.50	1.50	1.50	2.00	1.50
Silicon, max, per cent	1.50	2.00	2.00	1.50	2.00	1.50	2.00	1.75	2.50	1.50
Sulfur, max, per cent	0.040	0.040	0.040	0.040	0.040	0.040	0.040	0.040	0.040	0.040
Phosphorus, max, per cent	0.040	0.040	0.040	0.040	0.040	0.040	0.040	0.040	0.040	0.040
Chromium, per cent	11.5 to 14.0	17.0 to 21.0	18.0 to 21.0	18.0 to 21.0	18.0 to 21.0	22.0 to 26.0	22.0 to 26.0	23.0 to 27.0	18.0 to 21.0	15.0 to 18.0
Nickel, per cent	1.00 max	8.0 to 12.0	8.0 to 11.0	9.0 to 12.0	9.0 to 12.0	12.0 to 15.0	12.0 to 15.0	19.0 to 22.0	33.0 to 37.0	13.0 to 16.0
Molybdenum, per cent	0.50 max	...	...	2.0 to 3.0	...	...	...	...	0.50 max	1.75 to 2.25
Columbium, per cent	...	...	...	...	[b]	...	...	...	...	[c]

[a] By agreement between the manufacturer and the purchaser the carbon content of grade CH20 may be restricted to 0.10 per cent maximum. When so agreed the grade designation shall be CH10.

[b] Grade CF8C shall have a columbium content of not less than 8 times the carbon content but not over 1.00 per cent.

[c] Grade CF10MC shall have a columbium content of not less than 10 times the carbon content but not over 1.20 per cent.

Ladle Analysis

6. An analysis of each heat of steel shall be made by the manufacturer to determine the percentages of the elements prescribed in Table I. Analysis shall be made from a test ingot taken during the pouring of the heat. When drillings are used, they shall be taken not less than $\frac{1}{4}$ in. beneath the surface. The chemical composition thus determined shall be reported to the purchaser or his representative and shall conform to the requirements prescribed in Table I.

Check Analysis

7. An analysis may be made by the purchaser from finished material representing each heat, lot, or casting. When drillings are used, they shall be taken not less than $\frac{1}{4}$ in. beneath the surface, except in the case of castings which are too thin, and in a manner so as not to impair the usefulness of any casting selected for such check analysis. The chemical composition thus determined shall conform to the requirements prescribed in Table I.

Tensile Properties

8. (*a*) Tensile properties of steel used for the castings shall conform to the requirements prescribed in Table II.

(*b*) Tension tests shall be performed in accordance with the Methods and Definitions for Mechanical Testing of Steel Products (ASTM Designation: A 370). The yield point shall be determined by use of one of the following methods at a rate of separation of the crossheads under load not to exceed $\frac{1}{16}$ in. per min per in. of gage length:

(*1*) Drop of the beam or halt in the gage,
(*2*) Autographic diagram,
(*3*) Dividers, or
(*4*) Total extension under load using an extensometer.

Where a definite yield point is not exhibited, the yield strength corresponding to a limiting permanent offset of 0.2 per cent of the gage length of the specimen shall be used. The tensile strength shall be determined at a rate of separation of the cross-heads under load not to exceed $\frac{1}{2}$ in. per min per in. of gage length.

TABLE II.—TENSILE REQUIREMENTS.

Grade	CA15	CF3	CF8	CF8M	CF8C	CH20 or CH10	CH8	CK45	CT35	CF10MC
Tensile strength, min psi	90 000	70 000	70 000	70 000	70 000	70 000	65 000	65 000	65 000	70 000
Yield point, min, psi	65 000	30 000	30 000	30 000	30 000	30 000	28 000	35 000	28 000	30 000
Elongation in 2 in., min, per cent	18.0	35.0	35.0	30.0	30.0	30.0	30.0	10.0	15.0	20.0
Reduction of area, min, per cent	30.0	...	...	...	...	...	...	...	...	...

Test Specimens

9. (*a*) Test specimens shall be prepared in accordance with Methods A 370. For castings having a net weight of not over 500 lb, tension test specimens shall be taken from test bars attached to special blocks. For castings having a net weight over 500 lb, the test specimens shall be taken from test bars attached to the castings where practicable. If, in the opinion of the manufacturer, the design of the castings is such that test bars should not be attached to the castings, the test bars shall be cast attached to special blocks. Test bars from which tension specimens are to be taken shall remain attached to the castings or blocks they represent through the entire heat-treatment and until presented for inspection and shall be heat treated with the castings they represent. Test bars shall be provided in sufficient numbers to furnish specimens for the tests required in Section 11.

(*b*) Tension test specimens shall conform to the standard round tension test specimen with 2-in. gage length as described in Methods A 370.

Number of Tests

10. (*a*) One tension test shall be made from each heat in each heat-treatment charge and, when specified, for each casting weighing 500 lb net or over.

(*b*) If any test specimen shows defective machining or develops flaws, it may be discarded, and another specimen substituted from the same lot.[5]

(*c*) If the percentage of elongation of any tension test specimen is less than that specified in Table II and any part of the fracture is more than $\frac{3}{4}$ in. from the center of the gage length, as indicated by scribe scratches marked on the specimen before testing, a retest shall be allowed.

Retests

11. If the results of the mechanical tests for any lot[5] do not conform to the requirements specified, such lot may be reheat-treated, but no more than twice. In the case of reheat-treatment and retest, two tension tests shall be required, both of which shall conform to the requirements specified in Sections 8 and 9.

Hydrostatic Tests

12. (*a*) Each casting shall be tested after machining to the hydrostatic shell test pressures prescribed in the American Standard for Steel Pipe Flanges and Flanged Fittings (ASA No. B16.5), for the applicable alloy steel rating for which the casting is designed and shall show no leaks. Castings ordered under these specifications for working pressures other than those listed in the American Standard ratings shall be tested to such pressures as may be agreed upon by the manufacturer and the purchaser.

(*b*) It is realized that the foundry cannot perform the required pressure testing at the high pressure required on unmachined castings. Castings ordered in the rough state for final machining by the purchaser may be hydrostatically tested by the manufacturer at pressures to be agreed upon with the purchaser. However, the foundry is responsible as required under Section 23(*b*) for the satisfactory performance of the castings under the final test required in Section 12(*a*).

[5] The term "lot" refers to all castings from each heat in each heat treatment charge, except that when continuous furnaces are used, a "lot" would mean all castings from each heat subjected to identical heat treating procedure.

Magnetic Particle Test

13. If specified by the purchaser, castings of grade CA15 shall be examined by magnetic particle inspection. The inspection procedure used shall be in accordance with the Method of Dry Powder Magnetic Particle Inspection (ASTM Designation: E 109); and the types and degrees of discontinuities considered shall be judged by the Reference Photographs for Magnetic Particle Indications on Ferrous Castings (ASTM Designation: E 125). The extent of examination and the basis for acceptance shall be subject to agreement between the manufacturer and purchaser; and, if this examination is specified by the purchaser to be in accordance with the Quality Standard for Steel Castings for Valves, Flanges, and Fittings and other Piping Components (Dry Powder Magnetic Particle Inspection Method) (No. SP-53) of the Manufacturers Standardization Society of the Valve and Fittings Industry, the latter shall govern.

Fluid Penetrant Test

14. When so specified in the inquiry, contract or order and when mutually agreed upon by the manufacturer and purchaser, castings ordered to these specifications shall be subjected to fluid penetrant examination. When so specified, the fluid penetrant examination shall be as agreed upon by the manufacturer and the purchaser.

Radiographic Examination

15. When so specified in the inquiry and contract or order, castings ordered to these specifications shall be subjected to examination by means of X-rays or gamma rays for the detection of internal defects. Castings showing injurious defects, as judged by the Industrial Radiographic Standards for Steel Castings (ASTM Designation: E 71), shall be rejected or repaired with the approval of the purchaser. The service requirement classification of the standards and the number of pieces made from the same pattern which are to be radiographed shall constitute a part of the inquiry and contract or order.

Destructive Examination

16. When so specified in the inquiry and contract or order, the purchaser may, at his own expense, select representative castings from an order of identical castings and cut up and etch, or otherwise prepare the sections for examination for internal defects. Should injurious defects be found which evidence unsound steel or faulty foundry technique, all of the castings produced from the same pattern and according to the same foundry technique may be rejected, subject to acceptance as the result of a non-destructive examination as may be agreed upon between the manufacturer and the purchaser.

Workmanship

17. (*a*) The casting shall conform substantially to the shapes and sizes indicated by the patterns and drawings submitted by the purchaser.

(*b*) Flanged castings from which the flanges have been machined away to make welding end castings shall not be furnished under these specifications.

Finish

18. (*a*) The castings shall be clean and free from injurious defects.

(*b*) The castings shall not be peened, plugged, or impregnated to stop leaks.

Repair of Defects

19. (*a*) The location of existing defects shall be determined and they shall be completely removed to sound metal. The manufacturer shall check the completeness of removal visually, except when the defect is a crack, or when the defect is removed by methods involving the application of high temperatures, then he shall also inspect the cavity by the magnetic particle method (grade CA15), fluid penetrant, or any other method approved by the purchaser.

(*b*) Repairs shall be made using a welding procedure and by operators capable of producing sound welds of similar alloy type composition as the castings or of any other composition as may be agreed on by the manufacturer and purchaser. Castings of grade CA15, after completion of weld repairing, shall be retempered as provided in Section 3(*c*) except that local tempering will be permitted if, in the opinion of the manufacturer, furnace heat treatment would be damaging to the finished surface of a machined casting. Heat treatment, after weld repair of grade CA15 castings, other than tempering, shall be performed only when agreed on between the manufacturer and the purchaser. No heat treatment shall be required after weld repair of castings to the austenitic grades except in the case of major weld repairs as described in Paragraph (*c*) below.

NOTE 3.—When austenitic steel castings are to be used in services where they will be subject to stress-corrosion, the purchaser should so indicate in his order and such castings should be fully heat treated following all weld repairs.

(*c*) Weld repairs shall be considered major in the case of a casting which had leaked on hydrostatic test, or when the depth of cavity prepared for welding exceeds 20 per cent of the actual wall thickness or 1 in., whichever is smaller, or when the extent of the cavity exceeds approximately 10 sq in. When requested by the purchaser's inspector, such weld repairs shall be subject to his approval. He shall also have the right to require complete reheat-treatment of the repaired casting in accordance with Section 3. When mutually agreed upon by the purchaser and the manufacturer, major repairs may be examined at the manufacturer's expense by magnetic particle inspection (grade CA15) or fluid penetrant or by radiographing or both, to check adequacy of the repair.

Marking

20. (*a*) Pressure containing castings, made in accordance with any of the grades of steel covered by these specifications, shall be marked for material identification with the ASTM symbols for the grade of alloy steel and the heat number or heat identification. Marking shall be in such position as not to injure the usefulness of the castings.

(*b*) Finished products shall be marked in accordance with the Standard Marking System for Valves, Fittings, Flanges, and Unions (No. SP-25) of the Manufacturers Standardization Society of the Valve and Fittings Industry.

(*c*) Pressure containing castings, made of alloy steel grades not covered by these specifications, shall be marked as re-

quired in Paragraph (*a*) except that identifying symbols for the grade of steel shall be used which will not conflict with any other ASTM symbols for steel identification.

Inspection

21. (*a*) The inspector representing the purchaser shall have free entry at all times, while work on the contract of the purchaser is being performed, to all parts of the manufacturer's work that concern the manufacture of the material ordered. The manufacturer shall afford the inspector, without charge, all reasonable facilities to satisfy him that the material is being furnished in accordance with these specifications. All tests (except check analysis) and inspection shall be made at the place of manufacture prior to shipment, unless otherwise specified, and shall be so conducted as not to interfere unnecessarily with the operation of the works.

(*b*) If, in the case of important castings for special purposes, surface inspection in the green state is required, this shall be so specified in the inquiry and contract or order.

Records

22. (*a*) Unless otherwise specified, the manufacturer shall submit to the purchaser a certified record of the results of the chemical analyses and mechanical tests together with a statement that all the requirements of these specifications have been met.

(*b*) *Certification.*—When agreed upon in writing between the manufacturer and the purchaser, a certification that the material conforms to the requirements of these specifications shall be the basis of acceptance of the material.

Rejection

23. (*a*) Unless otherwise specified any rejection based on tests made in accordance with Section 7 shall be reported to the manufacturer within twelve working days from the receipt of samples by the purchaser.

(*b*) Material that shows injurious defects subsequent to its acceptance at the foundry's works will be rejected, and the foundry shall be notified.

Rehearing

24. Samples, tested in accordance with Section 7, that represent rejected material, shall be preserved for two weeks from the date of transmission of the test report. In case of dissatisfaction with the results of the tests, the manufacturer may make claim for a rehearing within that time.

SPECIFICATION FOR FERRITIC STEEL CASTINGS FOR PRESSURE-CONTAINING PARTS SUITABLE FOR LOW-TEMPERATURE SERVICE

SA-352

(IDENTICAL WITH ASTM SPECIFICATION A 352-60T)

Scope

1. (*a*) These specifications cover steel castings for valves, flanges, fittings and other pressure containing parts intended primarily for low-temperature service.

(*b*) Four grades of ferritic steels are covered (Note 1). Selection of analysis will depend on design and service conditions (Note 2). The recommended minimum service temperature is the lowest temperature at which the material will meet the impact requirements of these specifications.

Grade	Minimum Service Temperature, deg Fahr
LC B	−50
LC 1	−75
LC 2	−100
LC 3	−150

NOTE 1.—The committee formulating these specifications has included four grades of ferritic steel that have been rather extensively used for low-temperature service. Upon agreement between the manufacturer and the purchaser, other grades of material may be employed which meet the mechanical test requirements. Other compositions will be considered for inclusion by the committee when the need becomes apparent.

NOTE 2.—These specifications cover the low-temperature requirements particularly pertinent for ferritic steels. Austenitic steels since they are not ordinarily subject to "low temperature transitions" of impact strength are not contemplated under these specifications.

Process

2. The steel shall be made by the open hearth, electric furnace, induction, or other process which will produce satisfactory steel meeting the requirements of these specifications.

Heat Treatment

3. (*a*) All castings shall receive a heat treatment proper to their design and chemical composition.

(*b*) Heat treatment shall be performed before machining except in instances when reheat-treating is necessary. Unless the method of heat treatment is specified by the purchaser, thus becoming a matter of agreement with the manufacturer, the type of heat treatment used shall be at the option of the manufacturer. This latter condition must necessarily apply for stock purposes.

(*c*) Heat treatment may consist of normalizing, or normalizing followed by tempering at a temperature below the critical range. Liquid quenching followed by drawing may be used when agreed upon by the manufacturer and the purchaser. Such castings shall be suitably marked.

(*d*) All castings shall have been allowed to cool, after pouring, to a temperature below the critical range before heat treatment.

(*e*) *Normalizing.*—The procedure for normalizing shall consist of heating the casting to the proper temperature above the critical range and cooling in air to a temperature below the critical range.

(*f*) *Quenching.*—The procedure for quenching shall consist of heating the castings to the proper temperature above the critical range and cooling rapidly by contact with a liquid medium.

(*g*) *Tempering.*—The procedure for tempering shall consist of heating the castings to a temperature below the critical range but not less than 1000 F and holding at that temperature not less than 1 hr per in. or less of section, followed by cooling in a manner best suited for the development of low-temperature impact properties.

Temperature Control

4. Furnace temperature for heat treating shall be effectively controlled by use of pyrometers.

TABLE I.—CHEMICAL REQUIREMENTS.

Grade	Carbon Steel	Carbon Molybdenum Steel	2 Per Cent Nickel Steel	3½ Per cent Nickel Steel
Symbol	LC B	LC 1	LC 2	LC 3
Carbon, max, per cent	0.30	0.25	0.25	0.15
Manganese, per cent	1.00 max	0.50 to 0.80	0.50 to 0.80	0.50 to 0.80
Phosphorus, max, per cent	0.050	0.050	0.050	0.050
Sulfur, max, per cent	0.060	0.060	0.050	0.050
Silicon, max, per cent	0.60	0.60	0.60	0.60
Nickel, per cent	....	....	2.0 to 3.0	3.0 to 4.0
Molybdenum, per cent	....	0.45 to 0.65	....	....

Chemical Composition

5. The steel shall conform to the requirements as to chemical composition prescribed in Table I.

Ladle Analysis

6. An analysis of each heat of steel shall be made by the manufacturer to de-

termine the percentages of the elements prescribed in Table I. Analysis shall be made from a test ingot taken during the pouring of the heat. When drillings are used, they shall be taken not less than ¼ in. beneath the surface. The chemical composition thus determined shall be reported to the purchaser or his representative and shall conform to the requirements prescribed in Table I.

Check Analysis

7. An analysis may be made by the purchaser from finished material representing each heat, lot, or casting. When drillings are used, they shall be taken not less than ¼ in. beneath the surface, except in the case of castings which are too thin, and in a manner so as not to impair the usefulness of any casting selected for such check analysis. The chemical composition thus determined shall conform to the requirements prescribed in Table I.

Tensile Properties

8. (*a*) Tensile properties of steel used for the castings shall conform to the requirements prescribed in Table II.

(*b*) Tension tests shall be performed in accordance with the Methods and Definitions for Mechanical Testing of Steel Products (ASTM Designation: A 370).

hibited, the yield strength corresponding to a limiting permanent offset of 0.2 per cent of the gage length of the specimen shall be used. The tensile strength shall be determined at a rate of separation of the cross-heads under load not to exceed ½ in. per min per in. of gage length.

Impact Properties

9. (*a*) The notched bar impact properties of the material shall be determined by testing a set of three Charpy keyhole impact specimens at one of the standard test temperatures in conformance with Section 10(*b*), depending on the intended service temperature. The average energy value of the three specimens shall be not less than 15 ft-lb, with no one value falling below 10 ft-lb.

Impact Test

10. (*a*) The notched bar impact test shall be made using the specimens described in Section 11(*c*). The notched bar impact test shall be made in accordance with the procedure for the simple beam Charpy type test described in Methods A 370.

(*b*) Unless otherwise agreed upon the grades of steel covered by these specifications shall be tested at the following

TABLE II.—TENSILE REQUIREMENTS.

Grade	Carbon Steel	Carbon Molybdenum Steel	2 Per Cent Nickel Steel	3½ Per Cent Nickel Steel
Symbol	LC B	LC 1	LC 2	LC 3
Tensile strength, min, psi	65 000	65 000	65 000	65 000
Yield point, min, psi	35 000	35 000	40 000	40 000
Elongation in 2 in., min, per cent	24.0	24.0	24.0	24.0
Reduction of area, min, per cent	35.0	35.0	35.0	35.0

The yield point shall be determined by use of one of the following methods at a rate of separation of the cross-heads under load not to exceed $\frac{1}{16}$ in. per min per in. of gage length:

(*1*) Drop of the beam or halt in the gage,
(*2*) Autographic diagram,
(*3*) Dividers, or
(*4*) Total extension under load using an extensometer.

Where a definite yield point is not exhibited, the yield strength corresponding to a limiting permanent offset of 0.2 per cent of the gage length of the specimen shall be used. The tensile strength shall be determined at a rate of separation of the cross-heads under load not to exceed ½ in. per min per in. of gage length.

NOTE 3.—This table signifies that these grades are recommended for use down to the temperature indicated if each heat of steel meets the impact test requirements at these temperatures. It should be noted that in the present state of the science of steel melting not all heats of these materials will meet the impact requirements at the lowest temperature shown in this table. For example, much of the cast carbon steel now produced within the chemical limits of grade LCB will not meet the impact requirements at temperatures any lower than −25 F. However, the committee formulating these specifications does not wish to restrict advances in the use of such material and, hence, has set lower temperature limits somewhat below those which could be readily met in commercial practice at the time of issuing these specifications. Purchasers of castings should check the lowest practical temperature of use with individual foundries inasmuch as melting practices vary and are continually subject to improvement.

(*c*) Impact tests at temperatures lower than +70 F should be made with the following precautions: the impact test specimens as well as the handling tongs shall be cooled a sufficient time in a suitable container so that both reach the desired temperature. The temperature shall be measured with thermocouples, thermometers, or any other suitable devices and shall be controlled within ±3 F. The specimens shall be quickly transferred from the cooling device to the anvil of the Charpy impact testing machine and broken with a time lapse of not more than 5 sec.

Test Specimens

11. (*a*) Test specimens shall be prepared in accordance with Methods A 370. For a casting having a net weight of not over 500 lb, test specimens shall be taken from test bars attached to special blocks. For castings having a net weight over 500 lb, the test specimens shall be taken from test bars attached to the castings where practicable. If in the opinion of the manufacturer, the design of the castings is such that test bars should not be attached to the castings, the test bars shall be cast attached to special blocks. Test bars from which tension and impact test specimens are to be taken shall remain attached to the castings or blocks they represent through the entire heat treatment and until presented for inspection and shall be heat treated with the castings they represent. Test bars shall be

temperatures (Note 3):

Grade	Testing Temperature, F
LCB	−50
LC1	−75
LC2	−100
LC3	−150

If other test temperatures are agreed upon, they should preferably be selected in increments of 25 F. The standard test temperatures shall be −25 F, −50 F, −75 F, −100 F, etc.

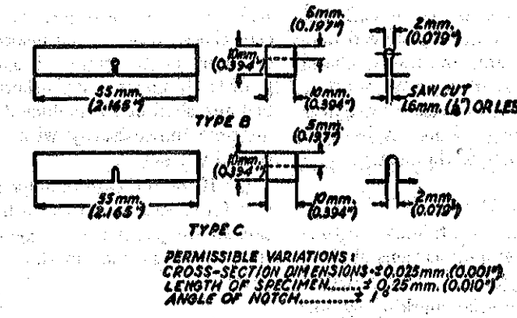

FIG. 1.—Simple Beam Impact Test Specimens.

provided in sufficient numbers to furnish specimens for the tests required in Section 12.

(*b*) Tension test specimens shall conform to the standard round tension test specimen with 2-in. gage length as described in Methods A 370.

(*c*) Impact test specimens shall be machined to the form and dimensions shown in Fig. 1.

Number of Tests

12. (*a*) One tension test at room temperature and one impact test (that is, three specimens) at the required temperature shall be made from each heat in each heat treatment charge and, when specified, for each casting weighing 500 lb net or over.

(*b*) If any test specimen shows defective machining or develops flaws, it may be discarded and another specimen substituted from the same lot.[4]

(*c*) If the percentage of elongation of any tension test specimen is less than that specified in Table II and any part of the fracture is more than ¾ in. from the center of the gage length, as indicated by scribe scratches marked on the specimen before testing, a retest shall be allowed.

Retests

13. If the results of the mechanical tests for any lot[4] do not conform to the requirements specified, such lot may be reheat treated, but not more than twice. Retest after reheat treatment shall consist of double the number of the type of test which originally failed and a single test of the type which passed.

[4] The term "lot" refers to all castings from each heat in each heat treatment charge, except that when continuous furnaces are used, a "lot" would mean all castings from each heat subjected to identical heat treating procedure.

Hydrostatic Tests

14. (*a*) Each casting shall be tested after machining to the hydrostatic shell test pressures prescribed in the American Standard for Steel Pipe Flanges and Flanged Fittings (ASA No.: B 16.5), for the applicable alloy steel rating for which the casting is designed and shall show no leaks. Castings ordered under these specifications for working pressures others than those listed in the standard ASA ratings shall be tested to such pressure as may be agreed upon by the manufacturer and the purchaser.

(*b*) It is realized that the foundry can not perform the required pressure testing at the high pressure required on unmachined castings. Castings ordered in the rough state for final machining by the purchaser may be hydrostatically tested by the manufacturer at pressures to be agreed upon with the purchaser. However, the foundry is responsible as required under Section 24(*b*) for the satisfactory performance of the casting under the final test required in Paragraph (*a*).

Magnetic Particle Examination

15. If specified by the purchaser, castings shall be examined by magnetic particle inspection. The inspection procedure used shall be in accordance with the Method of Dry Powder Magnetic Particle Inspection (ASTM Designation: E 109), and the types and degrees of discontinuities considered shall be judged by the Reference Photographs for Magnetic Particle Indications on Ferrous Castings (ASTM Designation: E 125). The extent of examination and the basis for acceptance shall be subject to agreement between the manufacturer and the purchaser; and, if this examination is specified by the purchaser to be in accordance with the Quality Standard for Steel Castings for Valves, Flanges, and Fittings and other Piping Components (Dry Powder Magnetic Particle Inspection Method) (No. SP-53), of the Manufacturers Standardization Society of the Valve and Fittings Industry, the latter shall govern.

Radiographic Examination

16. When so specified in the inquiry and contract or order, castings ordered to these specifications shall be subjected to examination by means of X-ray or gamma rays for the detection of internal defects. Castings showing injurious defects, as judged by the Industrial Radiographic Standards for Steel Casting (ASTM Designation: E 71), shall be rejected or repaired with the approval of the purchaser. The service requirement classification of the standards and the number of pieces made from the same pattern which are to be radiographed shall constitute a part of the inquiry and contract or order.

Destructive Examination

17. When so specified in the inquiry and contract or order, the purchaser may, at his own expense, select representative castings from an order of identical castings and cut up and etch, or otherwise prepare the sections for examination for internal defects. Should injurious defects be found which evidence unsound steel or faulty foundry technique, all of the castings produced from the same pattern and according to the same foundry technique may be rejected, subject to acceptance as the result of non-destructive examination as may be agreed upon between the manufacturer and the purchaser.

Workmanship

18. The castings shall conform substantially to the shapes and sizes indi-

cated by the patterns and drawings submitted by the purchaser.

Finish

19. (*a*) The castings shall be clean and free from injurious defects.

(*b*) The casting shall not be peened, plugged, or impregnated to stop leaks.

Repair or Defects

20. (*a*) The location of existing defects shall be determined and they shall be completely removed to sound metal. The manufacturer shall check the completeness of removal visually, except that when the defect is a crack, or when the defect is removed by methods involving the application of high temperatures, then he shall also inspect the cavity by the magnetic particle method or other methods approved by the purchaser.

(*b*) Repairs shall be made using a welding procedure and by operators capable of producing sound welds of alloy composition similar to the casting, or of other composition as may be agreed upon by the manufacturer and the purchaser. The welding rod shall be of a lot tested by the rod manufacturer for conformance to the low temperature impact strength requirement. The castings after completion of weld repairing shall be reheat-treated as provided in Section 3 except that local tempering of the weld repairs will be permitted if, in the manufacturer's opinion, complete furnace heat treatment would be damaging to the finished surfaces of a machined casting.

(*c*) Weld repairs shall be considered major in the case of a casting which had leaked on hydrostatic test, or when the depth of the cavity prepared for welding exceeds 20 per cent of the actual wall thickness or 1 in., whichever is smaller, or when the extent of the cavity exceeds approximately 10 sq in. When requested by the purchaser's inspector, such weld repairs shall be subject to his approval. He shall also have the right to require complete reheat-treatment of the repaired casting in accordance with Section 3(*c*). When mutually agreed upon by the manufacturer and the purchaser, major repair welds may be examined at the manufacturer's expense by magnetic particles or radiographing, or both, to check the adequacy of the repair.

Marking

21. (*a*) Pressure containing castings supplied to these specifications shall be supplied with a raised pad immediately ahead of the material marking symbol upon which will be stamped the lowest standard temperature at which this lot of material successfully passed the impact requirements. The material mark shall be one of those shown in Table I. The castings shall also be marked with heat number or heat identification. Description of material under this specification will read as follows, for example: "25 LC B," "50 LC 1," or "125, LC 3."

(*b*) Finished products shall be marked in accordance with the Standard Marking System for Valves, Fittings, Flanges, and Unions (No. SP-25) of the Manufacturers Standardization Society of the Valve and Fittings Industry.

(*c*) Pressure containing castings, made of alloy-steel grades not covered by these specifications, shall be marked as required in Paragraph (*a*) except that identifying symbols for the grade of steel shall be used which will not conflict with any ASTM symbols for steel identification.

Inspection

22. (*a*) The inspector representing the purchaser shall have free entry, at all times while work on the contract of the purchaser is being performed, to all parts of the manufacturer's works that concern the manufacture of the material ordered. The manufacturer shall afford the inspector, without charge, all reasonable facilities to satisfy him that the material is being furnished in accordance with these specifications. All tests (except check analysis) and inspection shall be made at the place of manufacture prior to shipment unless otherwise specified and shall be so conducted as not to interfere unnecessarily with the operation of the works.

(*b*) If, in the case of important castings for special purposes, surface inspection in the green state is required, this shall be so specified in the inquiry and order.

Records

23. (*a*) Unless otherwise specified, the manufacturer shall submit to the purchaser a certified record of the results of the chemical analysis and mechanical tests together with a statement that all the requirements of these specifications have been met.

(*b*) When agreed upon in writing between the manufacturer and the purchaser, a certification that the material conforms to the requirements of these specifications shall be the basis of acceptance of the material.

Rejection

24. (*a*) Unless otherwise specified, any rejection based on tests made in accordance with Section 7 shall be reported to the manufacturer within twelve working days from the receipt of samples by the purchaser.

(*b*) Material that shows injurious defects subsequent to its acceptance at the foundry's works will be rejected, and the foundry shall be notified.

Rehearing

25. A sample tested in accordance with Section 7 that represents rejected material shall be preserved for two weeks from the date of transmission of the test reports. In case of dissatisfaction with the results of the tests, the manufacturer may make claim for a rehearing within that time.

SPECIFICATION FOR LOW-CARBON, HIGH-NICKEL STEEL PLATE FOR PRESSURE VESSELS

SA-353

(IDENTICAL WITH ASTM SPECIFICATION A 353-58)

Scope

1. This specification covers two grades of low-carbon, high-nickel steel plates of firebox quality, intended particularly for fusion welding, for use in pressure vessels. The maximum thickness of plates to be specified under this specification shall be 2 in. for grade A and 0.580 in. for Grade B.

General Conditions of Delivery

2. Material furnished under this specification shall conform to the applicable requirements of the current edition of the Specification for General Requirements for Delivery of Rolled Steel Plates of Flange and Firebox Qualities (ASTM Designation: A 20). It is suggested that the plates be pickled, or the scale removed by other means after the grain refining treatment and before fabrication, as the scale may interfere with formability.

Process

3. (*a*) The steel may be made by either or both of the following processes: open hearth or electric furnace.

(*b*) When these plates are intended primarily for low-temperature service, it is suggested that the steel be deoxidized in accordance with fine grain practice.

Heat Treatment

4. (*a*) Plates, before being fabricated, shall be uniformly heat treated to produce grain refinement. If the treatment of the plates is not specified to be done at the plate manufacturer's plant, the testing shall be carried out in accordance with Paragraph (*b*). The recommended heat treatment is as follows: heat until the plate attains a uniform temperature of 1650 F, hold at this temperature a minimum of 1 hr per in. of thickness, but in no case less than 1 hr, and cool in air. Reheat until the plate attains a uniform temperature of 1450 F, hold at this temperature a minimum of 1 hr per in. of thickness, but in no case less than 1 hr, and cool in air.

(*b*) When a fabricator is equipped and elects to perform the required heat treatment of plates for grain refinement, the plates shall be accepted on the basis of the mill tests made on specimens heat treated in accordance with the requirements of the purchase order. If the heat treatment temperatures are not indicated in the purchase order, the plate manufacturer shall heat treat the specimen under conditions he considers appropriate for grain refinement, and shall stress relieve the specimen in accordance with Paragraph (*d*). The manufacturer shall inform the fabricator of the procedure followed in treating the pieces at the mill.

TABLE I.—CHEMICAL REQUIREMENTS.

	Grade A	Grade B
Carbon, max, per cent	0.13	0.13
Manganese, max, per cent	0.80	0.90
Phosphorus, max, per cent	0.035	0.035
Sulfur, max, per cent	0.040	0.040
Silicon, per cent:		
Ladle analysis	0.15 to 0.30	0.15 to 0.30
Check analysis	0.13 to 0.32	0.13 to 0.32
Nickel, per cent:		
Ladle analysis	8.50 to 9.50	8.50 to 9.50
Check analysis	8.40 to 9.60	8.40 to 9.60

TABLE II.—TENSILE REQUIREMENTS.

	Grade A	Grade B
Tensile strength, min, psi	90 000	95 000
Yield strength, min, psi (0.2 per cent offset)	60 000	65 000
Elongation in 2 in., min, per cent[a]	22.0	20.0

[a] A characteristic of this steel is a local disproportionate increase in the degree of necking down or contraction of the specimen under tension test, resulting in a decrease in elongation as the gage length is increased.

(*c*) The purchaser shall indicate in his order to the plate manufacturer whether the rolling mill or the fabricator shall perform the required heat treatment of the plates.

(*d*) When stress relieving is to be performed after fabrication, the recommended stress relieving treatment is as follows: gradually and uniformly heat the steel to a temperature between 1025 and 1085 F, hold for a minimum of 2 hr for thicknesses up to 1 in., plus a minimum of 1 hr for each additional inch of thickness, and cool in still atmosphere to a temperature not exceeding 600 F.

TABLE III.—BEND TEST DIAMETERS.

Thickness of Material, in.	Ratio of Bend Diameter to Thickness of Specimen
¾ and under	2
Over ¾ to 1¼, incl	2½
Over 1¼ to 2, incl	3

Chemical Composition

5. The steel shall conform to the requirements as to chemical composition prescribed in Table I.

Tensile Properties

6. (*a*) The material as represented by the tension test specimens shall conform to the requirements as to tensile properties prescribed in Table II.

(*b*) Tensile strength only need be determined on the tension test specimen taken from the top of firebox plates.

(*c*) For plates $\frac{3}{8}$ in. and under in thickness, the elongation shall be considered satisfactory provided the percentage of elongation in 2 in., across the break, is not less than 20 per cent.

Bending Properties

7. The bend test specimen shall stand being bent cold through 180 deg, without cracking on the outside of the bent portion, through an inside diameter which shall have the following relation to the thickness of the specimen prescribed in Table III. When the test is made on a specimen reduced in thickness, the rolled surface shall be on the outside curve of the bend.

Test Specimens

8. (*a*) The test specimen shall be prepared from the material in its heat-treated condition or from full-thickness samples simultaneously treated.

(*b*) Test specimens representing the plates shall be stress relieved by treating in accordance with Section 4(*d*).

(*c*) For material over $\frac{3}{4}$ in. in thickness, the standard round 2-in. gage length specimen shown in Fig. 2 of Specification A 20 may be used.

Number of Tests

9. Two tension tests, one bend test, and one homogeneity test shall be made from each plate as rolled.

NOTE.—The term "plate as rolled" used here refers to the unit plate rolled from a slab or directly from an ingot in its relation to the location and number of specimens, not to its condition.

Marking

10. As provided in ASTM Specification A20, each plate shall be legibly stamped or stenciled, depending on ordered thickness, with the letters "NI" and either "A" or "B" for the applicable grade, in addition to the regular marking.

SPECIFICATION FOR QUENCHED AND TEMPERED ALLOY STEEL BOLTS AND STUDS WITH SUITABLE NUTS

SA-354

(IDENTICAL WITH ASTM SPECIFICATION A 354-58T)

Scope

1. (*a*) This specification covers the chemical and mechanical requirements of quenched and tempered alloy steel (Note 1) bolts and studs 4 in. and under in diameter, for application at normal atmospheric temperatures where high strength is required and for limited application at elevated temperatures (Note 2).

TABLE I.—HARDNESS REQUIREMENTS FOR FULL SIZE BOLTS (ALL SIZES) AND STUDS.

Grade	Hardness			
	Brinell		Rockwell C	
	Min	Max	Min	Max
BB	217	285	18	30
BC	255	321	25	34
BD	302	352	32	38

NOTE 1.—In the interest of conservation of alloying elements, it is recommended that heat-treated carbon steel be used where possible. Heat-treated carbon steel bolting material is covered by the Specifications for Heat-Treated Carbon Steel Bolting Materials (ASTM Designation: A 261) and by the Specification for Quenched and Tempered Steel Bolts and Studs with Suitable Nuts and Plain Hardened Washers (ASTM Designation: A 325).

NOTE 2.—For bolts to be used at elevated temperatures, reference should be made to the Specifications for Alloy Steel Bolting Material for High-Temperature Service (ASTM Designation: A 193).

(*b*) Three levels of bolting strength are covered, designated grades BB, BC, and BD. Selection will depend upon design and the stresses and service for which the product is to be used.

(*c*) Suitable nuts are covered by reference to grades 2 and 2H of the Specifications for Carbon and Alloy Steel Nuts for Bolts for High-Pressure and High-Temperature Service (ASTM Designation: A 194).

Material and Manufacture

2. (*a*) The steel shall be made by the open hearth or electric furnace process.

(*b*) Bolts or studs shall be heat treated by quenching in a liquid medium from above the transformation temperature and then tempering by reheating to a minimum temperature of 850 F.

(*c*) Threads of bolts or studs may be cut or rolled.

Chemical Requirements

3. (*a*) Bolts and studs shall conform to the following check analysis requirements:

Element	Per Cent, max	Check Variation, Over, per cent
Phosphorus	0.040	0.005
Sulfur	0.040	0.005

(*b*) Check analysis may be made by the purchaser from finished bolts representing each lot and shall conform to the requirements prescribed in Paragraph (*a*).

Mechanical Requirements

4. (*a*) Bolts and studs shall meet the hardness requirements specified in Table I. This shall be the only requirement for bolts and studs that are too short or which have insufficient threads for tension testing or for bolts that have drilled or undersize heads which are weaker than the threaded section.

(*b*) Bolts or studs other than those excepted in Paragraph (*a*) shall be subjected to a tension test as specified in Section 6. For bolts or studs on which both hardness and tension tests are performed, acceptance on the basis of the tensile requirements shall take precedence where the minimum requirements are the subject of controversy.

(*c*) Bolts or studs 1 in. and under in diameter shall meet the requirements for proof load *or* yield strength and tensile strength as specified in Table II in full size.

(*d*) Bolts or studs $1\frac{1}{8}$ to 4 in. in diameter, incl., shall preferably meet the requirements for proof load *or* yield strength and tensile strength as specified in Table II in *full size*, but when equipment of sufficient capacity for such tests is not available they shall meet the requirements for machined specimens specified in Table III.

Dimensions

5. *Bolts.*—Unless otherwise specified, for sizes under 1 in. threads shall be the Coarse Thread Series and for sizes 1 in. and over threads shall be the 8 Pitch Thread Series, as specified in the latest issue of the American Standard for Screw Threads (ASA No. B1.1) having a class 2 or 2A tolerance.

Methods of Test

6. (*a*) Method of tests shall be in accordance with Supplement III of the Methods and Definitions for Mechanical Testing of Steel Products (ASTM Designation: A 370).

TABLE II.—TENSILE REQUIREMENTS FOR FULL SIZE BOLTS AND STUDS.

Bolt Size, in.	Threads per Inch	Stress Area sq in.	Grade BB			Grade BC			Grade BD		
			Tensile Strength, min, lb[a]	Proof Load, min, lb[b]	Yield Strength (0.2 per cent offset), min, lb[c]	Tensile Strength, min, lb[d]	Proof Load min, lb[e]	Yield Strength (0.2 per cent offset) min, lb[f]	Tensile Strength, min, lb[g]	Proof Load min, lb[h]	Yield Strength (0.2 per cent offset), min, lb[i]
1	2	3	4	5	6	7	8	9	10	11	12
¼	20	0.0318	3 350	2 550	2 650	4 000	3 350	3 450	4 750	3 800	4 000
5/16	18	0.0524	5 500	4 200	4 350	6 550	5 500	5 700	7 850	6 300	6 550
3/8	16	0.0775	8 150	6 200	6 450	9 700	8 150	8 450	11 650	9 300	9 700
7/16	14	0.1063	11 150	8 500	8 800	13 300	11 150	11 600	15 950	12 750	13 300
½	13	0.1419	14 900	11 350	11 800	17 750	14 900	15 450	21 300	17 050	17 750
9/16	12	0.182	19 100	14 550	15 100	22 750	19 100	19 850	27 300	21 850	22 750
5/8	11	0.226	23 750	18 100	18 750	28 250	23 750	24 650	33 900	27 100	28 250
¾	10	0.334	35 050	26 700	27 700	41 750	35 050	36 400	50 100	40 100	41 750
⅞	9	0.462	48 500	36 950	38 350	57 750	48 500	50 350	69 300	55 450	57 750
1	8	0.606	63 650	48 500	50 300	75 750	63 650	66 050	90 900	72 700	75 750
1⅛	7	0.763	80 100	61 050	63 350	95 400	80 100	83 150	114 450	91 550	95 400
1⅛	8	0.790	82 950	63 200	65 550	98 750	82 950	86 200	118 500	94 800	98 750
1¼	7	0.969	101 750	77 500	80 450	121 150	101 750	105 600	145 350	116 300	121 150
1¼	8	1.000	105 000	80 000	83 000	125 000	105 000	109 000	150 000	120 000	125 000
1⅜	6	1.155	121 300	92 400	95 850	144 400	121 300	125 900	173 250	138 600	144 400
1⅜	8	1.233	129 450	98 650	102 350	154 150	129 450	134 400	185 000	148 000	154 150
1½	6	1.405	147 550	112 400	116 600	175 650	147 550	153 150	210 750	168 600	175 650
1½	8	1.492	156 650	119 350	123 850	186 500	156 650	162 250	223 800	175 050	186 500
1¾	5	1.90	199 500	152 000	157 700	237 500	199 500	207 100	...	...	...
1¾	8	2.08	218 400	166 400	172 650	260 000	218 400	226 700	...	...	...
2	4½	2.50	262 500	200 000	207 500	312 500	262 500	272 500	...	...	...
2	8	2.77	290 850	221 600	229 900	346 250	290 850	301 950	...	...	...
2¼	4½	3.25	341 250	260 000	269 750	406 250	341 250	354 250	...	...	...
2¼	8	3.56	373 800	284 800	295 500	445 000	373 800	388 050	...	...	...
2½	4	4.00	420 000	320 000	332 000	500 000	420 000	436 000	...	...	...
2½	8	4.44	466 200	355 200	368 500	550 000	466 200	483 950	...	...	...
2¾	4	4.93	493 000	369 750	384 500	566 950	468 350	488 050	...	...	...
2¾	8	5.43	543 000	407 250	423 550	624 450	515 850	537 550	...	...	...
3	4	5.97	597 000	447 750	465 650	686 550	567 150	591 050	...	...	...
3	8	6.51	651 000	488 250	507 800	748 650	618 450	644 500	...	...	...
3¼	4	7.10	710 000	532 500	553 800	816 500	674 500	702 900	...	...	...
3¼	8	7.69	769 000	576 750	599 800	884 350	730 550	761 300	...	...	...
3½	4	8.33	833 000	624 750	649 750	957 950	791 350	824 650	...	...	...
3½	8	8.96	896 000	672 000	698 900	1 030 400	851 200	887 050	...	...	...
3¾	4	9.66	966 000	724 500	753 500	1 110 900	917 700	956 350	...	...	...
3¾	8	10.34	1 034 000	775 500	806 500	1 199 100	983 300	1 023 650	...	...	...
4	4	11.08	1 108 000	831 000	864 250	1 274 200	1 052 600	1 096 900	...	...	...
4	8	11.81	1 181 000	885 800	921 200	1 358 200	1 122 000	1 169 200	...	...	...

[a] Based on 105 000 psi for sizes ¼ to 2½ in., incl., and on 100 000 psi for sizes 2¾ to 4 in., incl.
[b] Based on 80 000 psi for sizes ¼ to 2½ in., incl., and on 75 000 psi for sizes 2¾ to 4 in., incl.
[c] Based on 83 000 psi for sizes ¼ to 2½ in., incl., and on 78 000 psi for sizes 2¾ to 4 in., incl.
[d] Based on 125 000 psi for sizes ¼ to 2½ in., incl., and on 115 000 psi for sizes 2¾ to 4 in., incl.
[e] Based on 105 000 psi for sizes ¼ to 2½ in., incl., and on 95 000 psi for sizes 2¾ to 4 in., incl.
[f] Based on 109 000 psi for sizes ¼ to 2½ in., incl., and on 99 000 psi for sizes 2¾ to 4 in., incl.
[g] Based on 150 000 psi for sizes ¼ to 1½ in., incl.
[h] Based on 120 000 psi for sizes ¼ to 1½ in., incl.
[i] Based on 125 000 psi for sizes ¼ to 1½ in., incl.

TABLE III.—MECHANICAL REQUIREMENTS FOR SPECIMENS MACHINED FROM BOLTS AND STUDS.

Bolt Size, in.	Tensile Strength, min, psi	Yield Strength (0.2 per cent offset), min, psi	Elongation in 2 in., min, per cent	Reduction of Area, min, per cent
Grade BB				
¼ to 2½, incl.	105 000	83 000	20	50
2¾ to 4, incl.	100 000	78 000	20	50
Grade BC				
¼ to 2½, incl.	125 000	109 000	16	50
2¾ to 4, incl.	115 000	99 000	16	45
Grade BD				
¼ to 1½, incl.	150 000	125 000	14	35

(*b*) Proof load rather than yield strength determination is preferred and shall be the arbitration method.

(*c*) Hexagon bolts shall be tested by the wedge tension method. Fracture shall be in the body or threads of the bolt without any fracture at the junction of the head and body.

(*d*) Studs and bolts with nonstandard heads other than those in Paragraph (*c*) shall be tested by the axial tension method.

(*e*) The speed of testing determined with a free running crosshead shall be a maximum of ⅛ in. per min for the bolt proof load determination and a maximum of 1 in. per min for the tensile strength determination.

Number of Tests and Retests

7. (*a*) The requirements of this specification shall be met in continuous mass production for stock during which the manufacturer has made such sample inspections as to insure normally that the material is controlled within the specified limits. Additional tests of individual shipments of material are not ordinarily contemplated.

(*b*) When additional tests are specified on the purchase order, a lot, for purposes of selecting test samples, shall consist of all material offered for inspection at one time that has the following common characteristics:

(*1*) One type of item, that is, bolts,

(*2*) One nominal size, and

(*3*) One nominal length of bolts.

(*c*) From each lot, the number of tests of each required property shall be as follows:

Number of Pieces in Lot	Number of Samples
800 and under	1
801 to 8 000	2
8 001 to 22 000	3
Over 22 000	5

(*d*) If any test specimen shows defective machining it may be discarded and another specimen substituted.

(*e*) Should any sample fail to meet the requirements of a specified test, double the number of samples from the same lot shall be tested, in which case all of the additional samples shall meet the specification.

Marking

8. (*a*) Bolts and studs shall be marked with the manufacturer's identification symbol, by raised or depressed marks at the manufacturer's option, on the top of the head for bolts and on one end for studs.

(*b*) Bolts and studs shall also be marked with the grade symbol except grade BD bolts which shall be marked with six radial lines 60 deg apart on the top of the head.

Inspection

9. (*a*) If the inspection described in Paragraph (*b*) is required by the purchaser, it shall be specified in the inquiry and contract or order.

(*b*) The inspector representing the purchaser shall have free entry at all times while work on the contract of the purchaser is being performed, to all parts of the manufacturer's works that concern the manufacture of the material ordered. The manufacturer shall afford the inspector all reasonable facilities, without charge, to satisfy him that the material is being furnished in accordance with this specification. All tests (except check analysis) and inspection shall be made at the place of manufacture prior to shipment, unless otherwise specified, and shall be so conducted as not to interfere unnecessarily with the operation of the works.

Rejection

10. Unless otherwise specified, any rejection based on tests specified herein shall be reported to the manufacturer within five working days from the receipt of samples by the purchaser.

SPECIFICATION FOR 5 PER CENT CHROMIUM, 0.5 PER CENT MOLYBDENUM STEEL PLATES FOR BOILERS AND OTHER PRESSURE VESSELS

SA-357

(IDENTICAL WITH ASTM SPECIFICATION A 357-58)

Scope

1. This specification covers 5 per cent chromium, 0.5 per cent molybdenum steel plates intended for use in boilers and other pressure vessels. The alloy is for mildly corrosive service and for elevated temperature service. Welding technique is of fundamental importance, and it is presupposed that welding procedures will be in accordance with approved methods for this class of material.

Process

2. The steel shall be made by the electric furnace process.

Heat Treatment

3. All plates shall be annealed. Heat treatment involving quenching in a liquid medium is not permitted.

Chemical Composition

4. The steel shall conform to the requirements as to chemical composition prescribed in Table I.

TABLE I.—CHEMICAL REQUIREMENTS.

Carbon, max, per cent	0.15
Manganese, per cent	0.30 to 0.60
Phosphorus, max, per cent	0.04
Sulfur, max, per cent	0.03
Silicon, max, per cent	0.50
Chromium, per cent	4.00 to 6.00
Molybdenum, per cent	0.45 to 0.65

Ladle Analysis

5. An analysis of each heat of steel shall be made by the manufacturer to determine the percentages of the elements prescribed in Table I. This analysis shall be made from a test ingot taken during the pouring of the heat. The chemical composition thus determined shall be reported to the purchaser or his representative, and shall conform to the requirements prescribed in Table I.

Check Analysis

6. An analysis may be made by the purchaser from a broken tension test specimen representing each plate as rolled (Note). The chemical composition thus determined shall conform to the requirements specified in Table I.

NOTE—The term "plate as rolled" used here and in Sections 9(*b*), 9(*c*), and 10 refers to the unit plate rolled from a slab or directly from an ingot in its relation to the location and number of specimens, not to its condition.

Tensile Properties

7. (*a*) The material as represented by the tensile test specimens shall conform to the requirements as to tensile properties prescribed in Table II.

TABLE II.—TENSILE REQUIREMENTS.

Tensile strength, psi	60 000 to 80 000
Yield strength, min, psi	30 000
Elongation in 2 in., min, per cent of	20
Reduction in area, min, per cent	50

Bending Properties

8. The bend test specimens shall stand being bent cold (room temperature) through 180 deg without cracking on the outside of the bent portion, to an inside diameter which shall have the relation to the thickness of specimen prescribed in Table III.

Test Specimens

9. (*a*) The test specimens shall be prepared from the material in the annealed condition (see Section 3).

TABLE III.—BEND DIAMETERS.

Thickness of Material, in.	Ratio of Bend Diameter Thickness of Specimen
⅜ and under	1
Over ⅜	2

(*b*) Tension test specimens shall be taken from the top and bottom corners of the plate as rolled parallel to its longitudinal axis. The tension specimens shall be the full thickness of the material and, on plates under ¾ in. in thickness, shall conform to the dimensions shown in Fig. 5 of the Tentative Methods and Definitions for Mechanical Testing of Steel Products (ASTM Designation: A 370), except, if desired, they may have straight or parallel edges (dimensions: plate thickness by ¾ in. width ±0.015 in., by 8-in. minimum length). On plates ¾ in. and over in thickness, the test specimens shall be machined to the form and dimensions shown in Fig. 6 of Methods A 370.

(*c*) Bend test specimens shall be taken from the bottom corner of the plate as rolled parallel to its longitudinal axis. Bend test specimens taken from plates up to and including 1 in. in thickness shall be the full thickness of the material, of a suitable length, and be between 1 and 2 in. in width. The sheared edges shall be removed to a depth of at least ⅛ in. and the sides shall be smoothed with a file. The corners of the cross-section of the specimen may be broken with a file, but no appreciable rounding of corners will be permitted.

(*d*) In the case of plates over 1 in. in thickness, machined bend test specimens 1 by ½ in. in cross-section and at least

6 in. in length shall be used. The edges may be rounded to a 1/16-in. radius. When permitted by agreement between the manufacturer and the purchaser, the cross-section may be modified to ½ in. square. But, in either of the above cases, the specimen shall have one surface of plate as rolled.

Number of Tests

10. Two tension tests and one bend test shall be made, representing each plate as rolled.

Permissible Variations in Dimensions or Weight

11. (*a*) One cubic inch of rolled steel shall be assumed to weigh 0.2811 lb.

(*b*) For plates, the permissible variations for dimensions and weight shall not exceed the applicable limits stated in Tables IV to VIII, inclusive.

Finish

12. (*a*) Unless otherwise specified, the plate, after annealing, shall be chemically descaled or descaled by grit or sand-blasting.

(*b*) The finished plates shall be free from injurious defects and shall have a workmanlike finish.

(*c*) Plates may be conditioned by the manufacturer for the removal of surface imperfections or depressions on either surface by grinding, provided the ground area is well flared and the grinding does not cause the thickness to be less than the permissible minimum.

Marking

13. (*a*) Except as specified in Paragraph (*b*), the name or brand of the manufacturer, the manufacturer's test identification number, the specification number, and the letters "5 Cr Mo" shall be legibly stamped on each finished plate in two places not less than 12 in. from the edges and on each butt strap near the center line not less than 12 in. from each end. Plates, the maximum lengthwise and crosswise dimensions of which do not exceed 72 in., shall have the marking stamped in one place approximately midway between the center and an edge. The manufacturer's test identification number shall be legibly

TOLERANCE TABLES

The following tolerance tables are applicable to this specification:

TABLE IV.—PERMISSIBLE VARIATIONS IN THICKNESS AND WEIGHT FOR RECTANGULAR SHEARED PLATES AND UNIVERSAL MILL PLATES WHEN ORDERED TO THICKNESS.

Specified Thickness, in.	Permissible Excess in Average Weight of Lots[a] for Widths Given in Inches, Expressed in Percentages of Nominal Weights									
	48 and under	Over 48 to 60, excl	60 to 72, excl	72 to 84, excl	84 to 96, excl	96 to 108, excl	108 to 120, excl	120 to 132, excl	132 to 144, excl	144 and over
1/16 to 1/4, excl	10.5	12.0	13.5	15.0	18.0	...	...	...	...	...
1/4 to 5/16, excl	9.0	10.5	12.0	13.5	15.0	18.0	21.0	24.0	28.5	...
5/16 to 3/8, excl	7.5	9.0	10.5	12.0	13.5	15.0	18.0	21.0	25.5	28.5
3/8 to 7/16, excl	7.0	7.5	9.0	10.5	12.0	13.5	15.0	18.0	22.5	25.5
7/16 to 1/2, excl	6.0	7.0	7.5	9.0	10.5	12.0	13.5	15.0	19.5	22.5
1/2 to 5/8, excl	5.5	6.0	7.0	7.5	9.0	10.5	12.0	13.5	16.5	19.5
5/8 to 3/4, excl	4.5	5.5	6.0	7.0	7.5	9.0	10.5	12.0	13.5	16.5
3/4 to 1, excl	4.0	4.5	5.5	6.0	7.0	7.5	9.0	10.5	12.0	13.5
1 and over	4.0	4.0	4.5	5.5	6.0	7.0	7.5	9.0	10.5	12.0

[a] The term lot means all the plates of each tabular width and thickness group represented in each shipment.

NOTE 1.—The permissible variation under the specified thickness shall be 0.01 in.

NOTE 2.—The permissible variation in weight for individual plates is 1⅓ times the amounts given in the above table.

NOTE 3.—The permissible overweight for circular and sketch plates is 25 per cent greater than the amounts given in the table.

TABLE V.—PERMISSIBLE VARIATIONS IN WIDTH AND LENGTH FOR RECTANGULAR SHEARED PLATES AND UNIVERSAL MILL PLATES.

Specified Dimensions in.		Permissible Variations over Specified Width and Length for Thicknesses Given, in.					
		To 3/8, excl		3/8 to 5/8, excl		5/8 and over[a]	
Length	Width	Width	Length	Width	Length	Width	Length
To 120, excl	To 60, excl	3/8	1/2	7/16	5/8	1/2	3/4
	60 to 84, excl	7/16	5/8	1/2	11/16	5/8	7/8
	84 to 108, excl	1/2	3/4	5/8	7/8	3/4	1
	108 and over	5/8	7/8	3/4	1	7/8	1 1/8
120 to 240, excl	To 60, excl	3/8	3/4	1/2	7/8	5/8	1
	60 to 84, excl	1/2	3/4	5/8	7/8	3/4	1
	84 to 108, excl	9/16	7/8	11/16	1	13/16	1 1/8
	108 and over	5/8	1	3/4	1 1/8	7/8	1 1/4
240 to 360, excl	To 60, excl	3/8	1	1/2	1 1/8	5/8	1 1/4
	60 to 84, excl	1/2	1	5/8	1 1/8	3/4	1 1/4
	84 to 108, excl	9/16	1	11/16	1 1/8	7/8	1 1/8
	108 and over	11/16	1 1/8	7/8	1 1/4	1	1 3/8
360 to 480, excl	To 60, excl	7/16	1 1/8	1/2	1 1/4	5/8	1 3/8
	60 to 84, excl	1/2	1 1/4	5/8	1 3/8	3/4	1 1/2
	84 to 108, excl	9/16	1 1/4	3/4	1 3/8	7/8	1 1/2
	108 and over	3/4	1 3/8	7/8	1 1/2	1	1 5/8
480 to 600, excl	To 60, excl	7/16	1 1/4	1/2	1 1/2	5/8	1 5/8
	60 to 84, excl	1/2	1 3/8	5/8	1 1/2	3/4	1 5/8
	84 to 108, excl	5/8	1 3/8	3/4	1 1/2	7/8	1 5/8
	108 and over	3/4	1 1/2	7/8	1 5/8	1	1 3/4
600 and over	To 60, excl	1/2	1 3/4	5/8	1 7/8	3/4	1 7/8
	60 to 84, excl	5/8	1 3/4	3/4	1 7/8	7/8	1 7/8
	84 to 108, excl	5/8	1 3/4	3/4	1 7/8	7/8	1 7/8
	108 and over	7/8	1 3/4	1	2	1 1/8	2 1/4

[a] Rectangular plates over 1 in. in thickness are not commonly sheared and are machined or otherwise cut to length and width or produced in the size as rolled, uncropped.

NOTE.—The permissible variation under specified width and length is ¼ in.

TABLE VI.—PERMISSIBLE VARIATIONS IN DIAMETER FOR CIRCULAR PLATES.

Specified Diameter, in.	Permissible Variations Over Specified Diameter for Thickness Given, in.		
	To 3/4, excl	3/4 to 1 1/4, excl	1 1/4 and over[a]
To 60, excl.	1/4	3/8	1/2
60 to 84, excl.	5/16	7/16	9/16
84 to 108, excl.	3/8	1/2	5/8
108 to 130, excl.	7/16	9/16	11/16

[a] Circular and sketch plates over 5/8 in. in thickness are not commonly sheared and are machined or otherwise cut.

NOTE.—No permissible variations under.

TABLE VII.—PERMISSIBLE CAMBER FOR SHEARED AND UNIVERSAL MILL PLATES.

Maximum permissible camber, in. =

$$\frac{1}{8} \text{ in.} \times \frac{\text{number of feet in length}}{5}$$

TABLE VIII.—PERMISSIBLE VARIATIONS FROM FLATNESS FOR ANNEALED PLATES.

Specified Thickness, in.	Permissible Variations from a Flat Surface for Thickness and Widths Given, in.								
	To 48, incl.	48, excl, to 60, excl	60 to 72, excl	72 to 84, excl	84 to 96, excl	96 to 108, excl	108 to 120, excl	120 to 144, excl	144 and over
3/16 to 1/4, excl.	3/4	1 1/16	1 1/4	1 3/8	1 5/8	1 5/8	...	...	...
1/4 to 3/8, excl.	1 1/16	3/4	1 5/16	1 1/16	1 3/8	1 7/16	1 9/16	1 7/8	...
3/8 to 1/2, excl.	1/2	9/16	1 1/16	3/4	1 5/16	1 1/8	1 1/4	1 7/16	1 3/4
1/2 to 3/4, excl.	1/2	9/16	5/8	5/8	1 5/16	1 1/8	1 1/8	1 1/8	1 3/8
3/4 to 1, excl.	1/2	9/16	5/8	5/8	3/4	1 3/16	1 3/16	1	1 1/8
1 to 1 1/2, excl.	1/2	9/16	9/16	9/16	1 1/16	1 1/16	1 1/16	3/4	1
1 1/2 to 4, excl.	3/16	5/16	3/8	7/16	1/2	9/16	5/8	3/4	7/8
4 to 6, excl.	1/4	3/8	1/2	9/16	5/8	3/4	7/8	1	1 1/8

NOTE 1.—Permissible variations apply to plates up to 15 ft in length, or to any 15 ft of longer plates.

NOTE 2.—If the longer dimension is under 36 in. the permissible variation is not greater than 1/4 in.

NOTE 3.—The shorter dimension specified is considered the width, and the permissible variation in flatness across the width does not exceed the tabular amount for that dimension.

NOTE 4.—The maximum deviation from a flat surface does not customarily exceed the tabular tolerance for the longer dimension specified.

stamped on each test specimen. Stenciling, in lieu of steel stamping, is permissible when specified.

(*b*) For plates under 1/4 in. in thickness, the marking specified in Paragraph (*a*) shall be legibly stenciled instead of stamped.

Inspection

14. The inspector representing the purchaser shall have free entry, at all times while work on the contract of the purchaser is being performed, to all parts of the manufacturer's works which concern the manufacture of the material ordered. The manufacturer shall afford the inspector, without charge, all reasonable facilities to satisfy him that the material is being furnished in accordance with this specification. All tests (except check analysis) and inspection shall be made at the place of manufacture prior to shipment, unless otherwise specified, and shall be so conducted as not to interfere unnecessarily with the operation of the works.

Retests

15. (*a*) If any test specimen shows defective machining or develops flaws, it may be discarded and another specimen substituted.

(*b*) If the percentage of elongation of any tension specimen is less than that prescribed in Table II and any part of the fracture is more than 3/4 in. from the center of the gage length of a 2-in. specimen, as indicated by the scribe scratches marked on the specimen before testing, a retest shall be allowed.

Rejection

16. (*a*) Unless otherwise specified, any rejection based on check analysis, made in accordance with Section 6, shall be reported to the manufacturer within ten working days from the receipt of samples by the purchaser.

(*b*) Samples that represent rejected material shall be preserved for two weeks from the date of the test report. In case of dissatisfaction with the results of the test, manufacturers may make claim for a rehearing within that time.

(*c*) Material that shows injurious defects subsequent to its acceptance at the manufacturer's works will be rejected and the manufacturer notified.

SPECIFICATION FOR FERRITIC ALLOY STEEL FORGED AND BORED PIPE FOR HIGH-TEMPERATURE SERVICE

SA-369

(IDENTICAL WITH ASTM SPECIFICATION A 369-61T)

Scope

1. (*a*) These specifications cover heavy wall alloy steel pipe (Note 1) made from turned and bored forgings and are intended for high-temperature service. Pipe ordered under these specifications shall be suitable for bending and other forming operations and for fusion welding. Selection will depend on design, service conditions, mechanical properties and high-temperature characteristics.

NOTE 1.—The use of the word "pipe" throughout the several sections of these specifications is used in the broad sense and intended to mean pipe, headers, or leads.

(*b*) Several grades of ferritic steels are covered. Their compositions are given in Table I. The grade desired shall be specified on the purchase order.

(*c*) Supplementary requirements (Paragraphs S1 to S5) of an optional nature are provided. These supplementary requirements call for additional tests to be made at the expense of the purchaser, and when desired shall be so stated in the order, together with the number of such tests required.

Process

2. (*a*) The steel shall be made by the electric furnace process or other processes approved by the purchaser, except that grades FP1, FP2, and FP12 may be made by the open-hearth process.

(*b*) Unless otherwise specified, the final forging operation shall be followed by a treatment suitable to the grade as specified in Section 6.

Discard

3. A sufficient discard shall be made from each ingot to secure freedom from injurious defects. The steel shall have a homogeneous structure.

Manufacture

4. (*a*) Material for forging shall consist of ingots or of blooms, billets, or solid rolled bars forged or rolled from an ingot, and cut to the required length by a process that will not produce injurious defects in the forging.

(*b*) The material shall be forged (Note 2) by hammering or pressing, and shall be brought as nearly as practicable to the finished shape and size by hot working.

NOTE 2.—The cross-sectional area of the solid forging shall have a reduction by forging or by rolling and forging from that of the ingot in the ratio of not less than 3 to 1.

Machining

5. (*a*) All forgings shall have both the inner and outer surfaces machined.

(*b*) The pipe shall be machined to a finish not coarser than 250 rms after heat treatment, unless otherwise specified.

Heat Treatment

6. (*a*) All steels shown in Table I other than FP1, FP2, and FP12 shall be reheated and furnished in the full-annealed or normalized and tempered condition, unless otherwise agreed upon between the manufacturer and the purchaser. If furnished in the normalized and tempered condition (Note 3), the temperature for tempering shall not be less than 1200 F.

NOTE 3.—It is recommended that the temperature for tempering should be at least 100 deg Fahr above the intended service temperature; consequently, the purchaser should advise the manufacturer if the service temperature is to be over 1100 F.

(*b*) Unless otherwise agreed upon by the manufacturer and the purchaser, pipe in grades FP1, FP2, and FP12, as a final heat treatment, shall be given a stress relieving treatment at 1200 F to 1300 F.

NOTE 4.—Certain of the ferritic steels covered by these specifications tend to harden if cooled rapidly from above their critical temperature. Some will air-harden, that is, become hardened to an undesirable degree when cooled in air from high temperatures. Therefore, operations involving heating such steels above their critical temperatures, such as welding, hot-bending and other forming operations, should be followed by suitable heat-treatment.

Chemical Composition

7. The steel shall conform to the chemical requirements prescribed in Table I.

Ladle Analysis

8. (*a*) An analysis of each heat of steel shall be made by the steel manufacturer to determine the percentages of the elements specified in Section 7. This analysis shall be made from drillings taken not less than 1/4 in. beneath the surface of a test ingot obtained during the pouring of the heat. The chemical composition thus determined, or that determined from a check analysis made by the forging manufacturer, shall be reported to the purchaser or his representative and shall conform to the re-

quirements specified in Section 7.

(*b*) In the case of large ingots poured from two or more heats, the weighted average of the chemical determinations of the several heats, made in accordance with Paragraph (*a*), shall conform to the requirements specified in Section 7.

Check Analysis

9. (*a*) At the request of the purchaser, a check analysis shall be made by the manufacturer on every heat.

(*b*) Samples for chemical analysis, except for spectrochemical analysis, shall be taken in accordance with the Method of Sampling Steel, Cast Iron, Open-Hearth Iron, and Wrought Iron for Determination of Chemical Composition (ASTM Designation: E 59).

(*c*) The results of these analyses shall be reported to the purchaser or his representative, and shall conform to the requirements specified in Section 7.

(*d*) If the analysis of one of the tests specified in Sections 8 or 9 (*a*) does not conform to the requirements specified in Section 7, an analysis of each billet or pipe from the same heat may be made, and all billets or pipes conforming to the requirements shall be accepted.

Tensile Properties

10. (*a*) The material shall conform to the requirements as to tensile properties prescribed in Table II at room temperature. Tests for acceptance shall be made after final heat treatment of the forging.

(*b*) The yield point shall be determined by the drop of the beam, by the halt in the gage of the testing machine, by the use of dividers, or by other approved methods. When a definite yield point is not exhibited, the yield strength corresponding to a permanent offset of 0.2 per cent of the gage length of the specimen, or to a total extension of 0.5 per cent of the gage length under load shall be determined.

Bending Properties

11. For pipe 2 in. and under in nominal diameter, a sufficient length of pipe shall stand being bent cold through 90-deg around a cylindrical mandrel, the diameter of which is twelve times the nominal diameter of the pipe, without developing cracks. When ordered for close coiling, the pipe shall stand being bent cold through 180-deg around a cylindrical mandrel, the diameter of which is eight times the nominal diameter of the pipe, without failure.

TABLE I.—CHEMICAL REQUIREMENTS.

Grade	FP1	FP2	FP3b
Carbon, per cent	0.10 to 0.20	0.10 to 0.20	0.15 max
Manganese, per cent	0.30 to 0.80	0.30 to 0.61	0.30 to 0.60
Phosphorus, max, per cent	0.045	0.045	0.030
Sulfur, max, per cent	0.045	0.045	0.030
Silicon, per cent	0.10 to 0.50	0.10 to 0.30	0.50 max
Chromium, per cent		0.50 to 0.81	1.65 to 2.35
Molybdenum, per cent	0.44 to 0.65	0.44 to 0.65	0.44 to 0.65

Grade	FP5	FP7	FP9
Carbon, per cent	0.15 max	0.15 max	0.15 max
Manganese, per cent	0.30 to 0.60	0.30 to 0.60	0.30 to 0.60
Phosphorus, max, per cent	0.030	0.030	0.030
Sulfur, max, per cent	0.030	0.030	0.030
Silicon, per cent	0.50 max	0.50 to 1.00	0.50 to 1.00
Chromium, per cent	4.00 to 6.00	6.00 to 8.00	8.00 to 10.00
Molybdenum, per cent	0.45 to 0.65	0.44 to 0.65	0.90 to 1.10

Grade	FR11	FP12	FP21
Carbon, per cent	0.15 max	0.15 max	0.15 max
Manganese, per cent	0.30 to 0.60	0.30 to 0.61	0.30 to 0.60
Phosphorus, max, per cent	0.030	0.045	0.030
Sulfur, max, per cent	0.030	0.045	0.030
Silicon, per cent	0.50 to 1.00	0.50 max	0.50 max
Chromium, per cent	1.00 to 1.50	0.80 to 1.25	2.65 to 3.35
Molybdenum, per cent	0.44 to 0.65	0.44 to 0.65	0.80 to 1.06

Grade	FP22
Carbon, per cent	0.15 max
Manganese, per cent	0.30 to 0.60
Phosphorus, max, per cent	0.030
Sulfur, max, per cent	0.030
Silicon, per cent	0.50 max
Chromium, per cent	1.90 to 2.60
Molybdenum, per cent	0.87 to 1.13

Flattening Tests

12. For pipe over 2 in. in nominal diameter, a section of pipe not less than 2½ in. in length shall be flattened cold between parallel plates until the opposite walls of the pipe meet. No cracks or breaks in the metal shall occur until the distance between the plates is less than that calculated for the values of "H" by the following formula:

$$H = \frac{(1 + e)t}{e + t/D}$$

where:

H = distance between flattening plates in in.,

t = nominal wall thickness of pipe in in.,

D = actual outside diameter of pipe in in., and

e = deformation per unit length (constant for these grades of steel, 0.08).

Evidence of laminations or burnt material shall not develop during the entire flattening processs.

Test Specimens

13. (*a*) The test specimens and the tests required by these specifications shall conform to those described in the Methods and Definitions for the Mechanical Testing of Steel Products (ASTM Designation: A 370).

(*b*) Specimens cut either longitudinally or transversely shall be acceptable for the tension test.

Number of Tests

14. (*a*) The tension test specified in Section 10 shall be made on a specimen taken from one end of one length of pipe representing each heat in each heat treatment lot. The bend test specified in Section 11 shall be made on one length of pipe representing each heat in each heat treatment lot.

TABLE II.—TENSILE REQUIREMENTS.

Grade	FP1, FP2	All Others
Tensile strength, min, psi.	55 000	60 000
Yield point, min, psi.	30 000	30 000
	Elongation Requirements, All Grades	
	Longitudinal	Transverse
Elongation in 2 in., min, per cent:		
Basic minimum elongation for wall ⅝ in. and over in thickness, strip tests,[a] and for all small sizes tested in full-section	30	20
When standard round 2-in. gage length test specimen is used	22	14

[a] For strip tests, the width of the gage section shall be 1½ in.

(*b*) The flattening test specified in Section 12 shall be made on specimens from one end of each length of pipe. Crop ends may be used. Specimens for flattening tests shall be smooth on the ends and free from burrs except when made on crop ends.

(*c*) If any test specimen shows defective machining or develops flaws, it may be discarded and another specimen substituted.

Retests

15. (*a*) If the results of the tension tests of any pipe do not conform to the requirements specified in Section 10 (*a*), the manufacturer may retreat the pipe, but not more than twice, except with the approval of the purchaser on the basis of satisfactory metallurgical evidence that the cause of the failure of the test is curable, and the quality of the material is satisfactory. Retests shall be made in accordance with Section 14. In case of reheat treatment, the purchaser shall be advised that retreatment has been required.

(*b*) If the percentage of elongation of any tension test specimen is less than that specified in Section 10 (*a*) and any part of the fracture is more than ¾ in. from the center of the gage length, as indicated by the scribe scratches marked on the specimen before testing, a retest shall be allowed.

(*c*) If the results of the tension test of any pipe do not conform to the requirements specified because a flaw develops in the test specimen during testing, a retest shall be allowed if the defect is not caused by ruptures, cracks, or flakes in the steel.

(*d*) If the results of the bend test do not conform to the requirements specified in Section 11, the manufacturer may retreat the pipe, but not more than twice, except with the approval of the purchaser on the basis of satisfactory metallurgical evidence that the cause of the failure of the test is curable, and the quality of the material is satisfactory. Retests shall be made in accordance with Section 14. In case of reheat treatment, the purchaser shall be advised that retreatment has been necessary.

(*e*) If the results of the flattening test of any pipe do not conform to the requirements specified in Section 12, examination to determine the cause of failure shall be made. If the cause for failure can be rectified by retreatment, the manufacturer may retreat the pipe, but not more than twice, and retests shall be made in accordance with Section 14. In case of reheat treatment, the purchaser shall be advised that retreatment has been necessary.

Workmanship

16. The pipe shall conform to the sizes and shapes specified by the purchaser.

Permissible Variations in Dimensions

17. (*a*) *Diameter.*—The inside diameter shall not vary under that specified by more than $\frac{1}{16}$ in. There shall be no variation over the specified inside diameter.

(*b*) *Thickness.*—The wall thickness shall not vary over that specified by more than ⅛ in. There shall be no variation under the specified wall thickness.

Lengths

18. Pipe lengths shall not vary over that specified by more than ⅛ in. There shall be no variation under the specified length.

Ends

19. Pipe ends shall be machined as specified in the purchase order.

Finish

20. (*a*) The finished pipe shall be reasonably straight and free from injurious defects.

(*b*) Repair of defects by welding shall be permitted only subject to the approval of the purchaser. Defects shall be thoroughly chipped or ground out before welding. Only qualified operators and procedures in accordance with the ASME Boiler and Pressure Vessel Code, Section IX, shall be used. Local or full heat treatment in accordance with Section 6 shall follow welding. Local grinding following welding and retreating shall be considered as meeting the requirements of Section 5 (*b*).

Marking

21. (*a*) Each length of pipe manufactured in accordance with these specifications shall be legibly marked by stenciling with the manufacturer's private identification mark, with the designation "A 369," grade, wall thickness, piece mark, length, an additional symbol S if the pipe conforms to the supplementary requirements specified in Paragraphs S1 to S6, and the heat number or manufacturer's number by which the heat can be identified. Marking shall begin approximately 12 in. from the end of each length, unless otherwise specified. When pipe marked as specified in this section is rejected, the designation "A 369" shall be cancelled. Indentation stamping instead of stenciling will be permitted only with the written approval of the purchaser.

(*b*) When it is specified that certain requirements of these specifications are to be completed by the purchaser upon receipt of the material, the manufacturer shall indicate that all requirements of the specifications have not been completed by a letter X, Y, or Z immediately following the specification number. This letter may be removed after completion of all requirements in accordance with these specifications. An explanation of specifi-

cation requirements to be completed is provided in Section 22(*b*).

Inspection

22. (*a*) The authorized inspector representing the purchaser shall have free entry, at all times while work on the contract of the purchaser is being performed, to all parts of the manufacturer's works that concern the manufacture of the material ordered. The manufacturer shall afford the inspector, without charge, all reasonable facilities to satisfy him that the material is being furnished in accordance with these specifications.

All tests and inspection shall be made at the place of manufacture prior to shipment and at the manufacturer's expense, unless otherwise specified, and shall be so conducted as not to interfere unnecessarily with the operation of the works. When specified in the order, the manufacture shall notify the purchaser in time so that he may have his inspector present to witness any part of the manufacture or tests that may be desired.

(*b*) *Certification.*—When agreed upon in writing between the manufacturer and the purchaser, a certification that the material conforms to the requirements of these specifications shall be the basis of acceptance of the material. Otherwise, the manufacturer shall report to the purchaser or his authorized representative the results of the chemical analyses and mechanical tests made in accordance with these specifications. The certificate or report accomplished by the manufacturer shall include a statement of explanation for the letter added to the specification number (see Section 21(*b*)), when all the requirements of these specifications have not been completed. The purchaser must certify that all requirements of the specifications have been completed before removal of the letter X, Y, or Z.

Rejection

23. Material which shows injurious defects subsequent to its acceptance at the manufacturer's works will be rejected, and the manufacturer shall be notified.

Rehearing

24. Samples tested in accordance with Sections 9, 10, 11, and 12 that represent rejected material shall be preserved for 30 days from the date of the test report. In case of dissatisfaction with the results of the tests, the manufacturer may make claim for rehearing within that time.

SUPPLEMENTARY REQUIREMENTS

These requirements shall not be considered unless specified in the order, in which event the supplementary tests specified in Paragraphs S1 to S5 shall be made at the mill, unless otherwise agreed upon, at the purchaser's expense and witnessed by his authorized inspector before shipment of the material.

Additional Tension Tests

S1. An additional tension test may be made on a specimen from each length of pipe. If the specimen from any length fails to conform to the mechanical properties specified in Section 10, that length shall be rejected.

Additional Flattening Tests

S2. The flattening test specified in Section 12 may be made on specimens from both ends of each length of pipe. This requirement applies only to pipe over 2 in. in diameter. Crop ends may be used. If the specimen from either end of any length fails to conform to the specified requirement, that length shall be rejected.

Ultrasonic Tests

S3. Each pipe shall be ultrasonically tested to determine its soundness throughout the entire length of the pipe. Until suitable standards are established, the basis for rejection of material shall be a matter of agreement between the manufacturer and the purchaser.

Hydrostatic Test

S4. A hydrostatic pressure test shall be applied as agreed upon by the manufacturer and the purchaser.

Metal Structure and Etching Tests

S5. The steel shall be homogeneous as shown by etching tests conducted in accordance with the Standard Method of Macroetch Testing and Inspection of Steel Forgings (ASTM Designation: A 317). Etching tests shall be made on a cross-section from both ends of each pipe, and shall show sound and reasonably uniform material, free from injurious laminations, cracks, and similar objectionable defects. If the specimen from either end of any length shows objectionable defects, one retest shall be permitted from that end. If this fails, the length shall be rejected. However, if removal of the defective end and subsequent retesting indicates the remainder of the length to be sound and reasonably uniform material, the manufacturer may offer the shortened length to the purchaser. Acceptance shall be a matter of agreement between the manufacturer and the purchaser.

SPECIFICATION FOR CORROSION-RESISTING CHROMIUM AND CHROMIUM-NICKEL STEEL WELDING RODS AND BARE ELECTRODES

SA-371

(IDENTICAL WITH ASTM SPECIFICATION A 371–53T)

Scope

1. These specifications are for corrosion-resisting chromium and chromium-nickel steel welding rods for use with the atomic hydrogen and inert-gas metal-arc (nonconsumable electrode) welding processes and bare electrodes for use with the submerged arc and inert-gas metal-arc (consumable electrode) welding processes. These welding rods and electrodes, commonly referred to as filler metals, include those alloy steels designated as corrosion- or heat-resisting chromium and chromium-nickel steels, in which chromium exceeds 4 per cent and nickel does not exceed 50 per cent.

NOTE.—No attempt has been made to classify all grades of filler metals within the limits of the above scope; only the more commonly used have been included.

Classification

2. The filler metals are classified on the basis of their chemical composition as manufactured.

Manufacture

3. The filler metal may be made by any method that will yield a product conforming to the requirements of these specifications.

Chemical Composition

4. The filler metals shall conform to the chemical composition shown in Table I for the classification in which they are to be included.

Standard Sizes and Lengths

5. Welding rods and electrodes shall be available in straight lengths and coils and wound on rims and spools.

(*a*) Standard sizes of electrodes and welding rods in all forms shall be as shown in Table II.

(*b*) Standard lengths of cut electrode shall be 36 ± ¼ in.

(*c*) All rims and spools shall have only one continuous length of welding rod or electrode per rim or spool, except as otherwise permitted by Section 8(*d*).

TABLE II.—STANDARD SIZES.

Form	Diameter, in.	Tolerance, in.
Welding rod in cut lengths	3/64, 1/16, 5/64, 3/32, 1/8, 5/32, 3/16	0.002
Welding rod[a] and electrode in coils	1/16, 5/64, 3/32, 1/8, 5/32	0.0015
	3/16, ¼	0.002
Welding rod[a] and electrode wound on rims or spools	0.035, 0.045, 1/16, 5/64, 3/32	0.001

[a] Out-of-roundness shall not exceed 0.001 in.

TABLE I.—CHEMICAL REQUIREMENTS.

NOTE.—Analysis shall be made for the elements for which specific values are shown in this table. If, however, the presence of other elements is indicated in the course of routine analysis, further analysis shall be made to determine that the total of these other elements, except iron, is not present in excess of 0.70 per cent.

AWS-ASTM Classification Number	Carbon, per cent	Chromium, per cent	Nickel, per cent	Molybdenum, per cent	Columbium plus Tantalum, per cent	Manganese, per cent	Silicon, max, per cent	Phosphorus, max, per cent	Sulphur, max, per cent
ER 308	0.08 max	19.5 to 22.0[a]	9.0 to 11.0	...	...	1.0 to 2.5	0.60	0.03	0.03
ER 308L	0.03 max	19.5 to 22.0[a]	9.0 to 11.0	...	...	1.0 to 2.5	0.60	0.03	0.03
ER 309	0.12 max	23.0 to 25.0	12.0 to 14.0	...	...	1.0 to 2.5	0.60	0.03	0.03
ER 310	0.08 to 0.15	25.0 min	20.0 min	...	...	1.0 to 2.5	0.60	0.03	0.03
ER 316	0.08 max	18.0 to 20.0	12.0 to 14.0	2.0 to 2.5	...	1.0 to 2.5	0.60	0.03	0.03
ER 316L	0.03 max	18.0 to 20.0	12.0 to 14.0	2.0 to 2.5	...	1.0 to 2.5	0.60	0.03	0.03
ER 317	0.08 max	18.5 to 20.5	13.0 to 15.0	3.25 to 4.0	...	1.0 to 2.5	0.60	0.03	0.03
ER 330	0.15 to 0.25	15.0 to 17.0	34.0 min	...	...	1.0 to 2.5	0.60	0.03	0.03
ER 347	0.08 max	18.5 to 21.0[a]	8.5 to 10.5	...	10 × C min, 1.00 max	1.0 to 2.5	0.60	0.03	0.03
ER 410	0.07 to 0.12	12.0 to 14.0	0.6 max	0.6 max	...	0.6 max	0.50	0.03	0.03
ER 420	0.25 to 0.40	12.0 to 14.0	0.6 max	...	...	0.6 max	0.50	0.03	0.03
ER 430	0.10 max	15.5 to 17.0	0.6 max	...	...	0.6 max	0.50	0.03	0.03
ER 502	0.10 max	4.5 to 6.0	0.4 max	0.45 to 0.65	...	0.6 max	0.60	0.03	0.03

[a] Chromium, min = 1.9 × nickel.

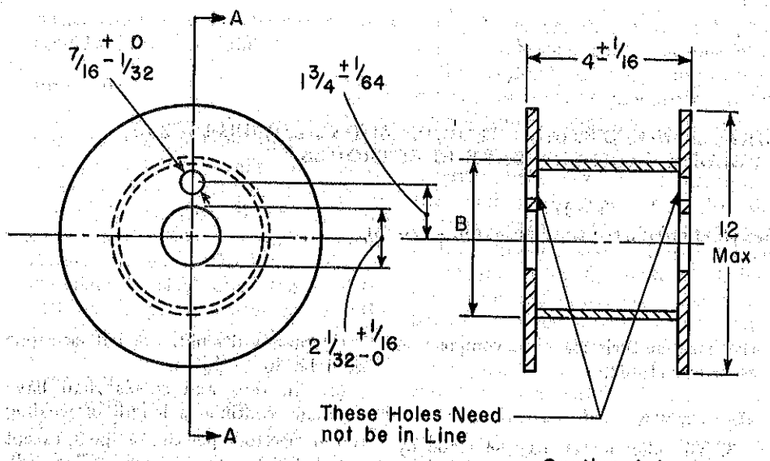

Note: All Dimensions in Inches

FIG. 1.—Standard Spool Dimensions.

Finish

6. All filler metal shall have a smooth finish, free from slivers, depressions, scratches, and scale, or other foreign matter that would adversely affect the welding properties or the operation of the welding equipment.

Coil, Rim, Spool and Winding Requirements

7. (*a*) Coil dimensions shall be as specified by the purchaser.

(*b*) If rims are used, they shall have an inside diameter of 12 in., plus 0 and minus ⅛ in., and a width of 3 in., plus 3/16 and minus 0 in., unless otherwise specified. Rims shall be of such material and thickness as to provide adequate strength and rigidity to prevent damage or distortion in normal handling or use. Rims shall be sufficiently clean and dry to maintain the cleanliness of the welding rod or electrode.

(*c*) If spools are used, spool dimensions shall be as shown in Fig. 1, unless otherwise specified. Barrel diameter, *B*, shall be such as to permit proper feeding of the electrode. Spools shall be of such material and thickness as to provide adequate strength and rigidity to prevent damage or distortion in normal handling or use. Spools shall be sufficiently clean and dry to maintain the cleanliness of the welding rod or electrode.

(*d*) The welding rod and electrode shall be wound so as to avoid producing kinks, waves, or sharp bends and so that they are free to unwind without restriction caused by overlapping or wedging.

Packaging

8. (*a*) All packages shall be strong enough to permit handling and storage under normal conditions.

(*b*) *Welding Rods and Electrodes in Straight Lengths.*—Standard size packages shall be 10 and 50 lb net weight.[3]

(*c*) *Welding Rods and Electrodes in Coils.*—Standard size coils shall be 25, 60 and 150 lb net weight.[3] Coils shall be wrapped and tied securely.

[3] Net weight shall be within 10 per cent of the nominal weight.

(*d*) *Welding Rods and Electrodes Wound on Rims and on Spools.*—Standard size rims shall be 25 and 60 lb net weight.[3] Standard size spools shall be 25 lb net weight.[3] Not over 20 per cent of any lot of rims or spools may either

(*1*) Have two lengths but be of standard weight, or

(*2*) Have only a single length but weigh 12½ to 22½ lb net weight.

(*e*) Filler metal shall be suitably packaged to insure against injury during shipping or storage under normal conditions.

Markings

9. (*a*) The outside of each package shall be legibly marked with the following information:

(*1*) Classification and specification number,

(*2*) Manufacturer's name and trade designation, and

(*3*) Diameter and net weight.

(*b*) Within the outer wrapping, welding rod and electrodes in coils shall be tagged at both ends showing the classification number.

(*c*) Electrodes and welding rods wound on rims shall be identified by the classification number placed directly on the rim in such a manner that it is not readily removable.

(*d*) Electrodes wound on spools shall be identified by the classification number placed on at least one flange of the spool in such a manner that it is not readily removable.

Guarantee

10. The manufacturer shall guarantee that the filler metal in all sizes and classifications conform to these specifications. The manufacturer's responsibility shall be limited to replacement of any filler metal that does not conform to the requirements of these specifications.

APPENDIX

GUIDE TO AWS-ASTM CLASSIFICATION OF CORROSION-RESISTING CHROMIUM AND CHROMIUM-NICKEL STEEL WELDING RODS AND BARE ELECTRODES

PART I.—INTRODUCTION

This guide is appended to the specifications as a source of information; *it is not mandatory and does not form a part of the specifications.*

The specifications themselves are intended to provide both the manufacturer and the purchaser of chromium and chromium-nickel steel welding rods and electrodes with a means of production control and a basis of acceptance through mutually acceptable, sound, standard requirements.

This guide has been prepared as an aid to prospective users of the chromium and chromium-nickel steel welding rods and electrodes covered by the specifications in determining the classification best suited for a particular application, with due consideration to the particular requirements for that application.

The system of classification numbers used in this specification follows the standard pattern used in other filler metal specifications. The letter *E* at the beginning of each number indicates an electrode, and the letter *R* indicates a welding rod. Since these filler metals are used as electrodes in submerged arc welding and in inert-gas metal-arc (consumable electrode) welding and as welding rods in atomic hydrogen and inert-gas metal-arc (nonconsumable electrode) welding both letters are used. The three digit number, such as *308* in *ER 308* designates the chemical composition of the filler metal.

In these specifications classification is on the basis of chemical composition of the filler metal as manufactured. Mechanical tests have not been included because the developments in the use of these filler metals for the processes designated in Section 1 have not progressed far enough to permit standardization of mechanical tests and yet make them sufficiently searching for all applications. It can be stated, however, that joints made with these filler metals under properly controlled welding procedures and using the processes prescribed herein will have mechanical properties at least equal to the base metal of corresponding chemical composition.

PART II.—CLASSIFICATION AS TO COMPOSITION

ER 308.—The nominal composition of the weld metal is 19 per cent chromium and 9 per cent nickel. Commercial specifications vary in the minimum alloy requirements of this alloy, and consequently the names 18/8, 19/9, and 20/10 are often associated with filler metal of this series. The letter *S* is often added to the 18/8, 19/9, or 20/10 names to designate the low-carbon grade (0.08 per cent, max) as compared with the higher carbon grade (0.20 per cent, max). Filler metal of this series is most often used to weld base metal of similar composition.

ER 308L.—The composition of this filler metal is identical to *ER 308* except for the carbon content. By specifying low (0.03 max) carbon in this alloy it is possible to obtain stability from intergranular corrosion due to carbide precipitation without the use of stabilizers such as columbium or titanium. These low carbon alloys, however, are not as strong at elevated temperature as the columbium stabilized alloys.

ER 309.—The nominal composition of the weld metal is 25 per cent chromium and 12 per cent nickel. In the wrought form, however, chromium is usually reduced in order to make the alloy more fully austenitic. Sometimes columbium is specified to stabilize the carbides.

The filler metal in this series is commonly used for welding similar alloys in wrought or cast forms. Occasionally, it is used to weld 18/8 base metals when severe corrosion conditions exist which require higher alloy content weld metal. It is also used in welding dissimilar metals, such as joining 18/8 to mild steel, welding the clad side of 18/8 clad steels, and applying sheet linings of 12 per cent chromium steels to mild steel shells.

ER 310.—The nominal composition of the weld metal is 25 per cent chromium and 20 per cent nickel. This filler metal was originally designed to weld base metals of similar composition. This filler metal has also found extensive use in the welding of hardenable steels. For instance, in welding armor steels, the high strength and ductility of the welds are useful properties to resist ballistic impact. Furthermore, in welding plain carbon or low alloy steels the weld metal from ER 310 filler metal may be considerably diluted by the base metal and yet retain the high ductility of the weld metal. This alloy is often used for welding clad steels, in order to offset the effect of dilution when the weld fuses to the carbon steel backing. For the same reason this alloy is often used for welding 18 per cent chromium, 8 per cent nickel steels to carbon steel.

ER 316.—The nominal composition of the weld metal is 18 per cent chromium, 12 per cent nickel, and 2 per cent molybdenum. Commercial specifications vary in the minimum alloy requirements, and consequently the names 18/8 Mo or 18/8 SMo are often associated with filler metal of this series. This filler metal should not be confused with the less common of the chromium-nickel-molybdenum alloys containing 3 to 4 per cent molybdenum. The filler metal of the ER 316 classification is usually used for welding similar alloys (about 2 per cent molybdenum). Filler metal of the ER 316 classification has been used successfully in applications involving special alloys for high-temperature service. The presence of molybdenum provides increased creep resistance at elevated temperatures.

ER 316L.—The composition of this filler metal is identical to ER 316 except for the carbon content. By specifying low (0.03 max) carbon in this alloy it is possible to obtain stability from intergranular corrosion due to carbide precipitation without the use of stabilizers such as columbium or titanium. These low carbon alloys, however, are not as strong at elevated temperature as the columbium stabilized alloys.

ER 317.—The alloy content of this classification is somewhat higher than ER 316 filler metal, particularly in molybdenum content. It is usually used for welding alloys of similar composition. The use of ER 317 filler metal is usually limited to severe corrosion applications involving sulfuric and sulfurous acids and their salts.

ER 330.—The nominal composition of this classification is 35 per cent nickel and 15 per cent chromium. Since nickel is the predominant element, it is commonly used for heat- and scale-resisting properties at temperatures above 1800 F. Repairs of defects in alloy castings and the welding of both castings and wrought alloys of similar composition are the most common applications.

ER 347.—The nominal composition of the weld metal is 19 per cent chromium, 9 per cent nickel, with columbium added as a stabilizer. Commercial specifications vary in the minimum alloy requirements, and consequently the names 18/8 Cb, 18/8 SCb and 19/9 SCb are often associated with filler metal of this classification. The alloy is also referred to as a stabilized 18/8 or 19/9 alloy indicating that it is not subject to intergranular corrosion resulting from carbide precipitation. The filler metal of this classification is usually used for welding chromium-nickel base metals of similar composition stabilized either with columbium or titanium. Filler metal depositing titanium as a stabilizing element is not generally used because titanium recovery in the weld metal is unreliable in many welding processes.

Although columbium is the stabilizing element usually specified in type 347 alloys, it should be recognized that tantalum is also present sometimes in amounts up to one-half of the total of columbium and tantalum. Tantalum and columbium are almost equally effective in stabilizing carbon and in providing high temperature strength. These specifications recognize the usual commercial practice of reporting columbium as the sum of the columbium plus tantalum.

ER 410.—This 12 per cent chromium alloy is an air-hardening steel, and, therefore, requires preheat and postheat treatments in order to achieve welds of adequate ductility for most engineering purposes. The most common application of filler metal of this type is for welding

alloys of similar composition. It is also used for deposition of overlays on carbon steels for corrosion, erosion or abrasion resistance, such as occurs in valve seats and other valve parts.

ER 420.—Filler metal in this classification is identical to ER 410 except for carbon content. By specifying higher carbon than in ER 410, this filler metal becomes applicable for many surfacing operations requiring corrosion resistance provided by 12 per cent chromium along with somewhat higher hardness than ER 410 for increased resistance to abrasion.

ER 430.—Filler metal in this classification generally contains between 15 and 17 per cent chromium. The composition is balanced by providing sufficient chromium to give adequate corrosion resistance for the usual applications and yet retain sufficient ductility in the heat-treated condition. (Excessive chromium will result in lowered ductility.)

Welding with filler metal of the ER 430 classification usually requires preheating before welding and a postheat treatment after welding. Optimum mechanical properties and corrosion resistance are obtained only when the weldment is heat treated following the welding operation.

ER 502.—Filler metal in this classification contains 4 to 6 per cent chromium and about 0.50 per cent molybdenum. It is used for welding material of similar composition, usually in the form of pipe or tubing. The alloy is an air-hardening material, and, therefore, when welding with ER 502 filler metal, preheating and postheat treatment is strongly recommended.

Part III.—Usability

When welding with the inert-gas metal-arc (nonconsumable electrode) process, dc straight polarity is preferred. For base metal up to 1/16 in. thick argon is the preferred shielding gas, because there is less tendency to burn through in these lighter thicknesses. For greater thicknesses helium is preferred because of the greater penetration and because of the better appearance obtained. For automatic welding, whatever the thickness, helium is preferred as the shielding gas because it provides a greater assurance of uniform penetration.

When welding with the consumable electrode method using the filler metal as an electrode, dc reverse polarity is most commonly used. The shielding gas is usually argon, with or without minor additions of oxygen. The minimum thickness which can be welded is in the neighborhood of 1/8 to 3/16 in. However, thinner sections can be joined if a backing is used.

For submerged arc welding, dc reversed polarity and ac may be used. Basic fluxes are generally recommended in order to minimize the oxidation of chromium and other elements and to minimize an increase in silicon content.

Part IV.—Special Tests

Although welds from filler metal covered by these specifications are commonly used in corrosion- or heat-resisting applications, it is not practical to require tests for corrosion or scale-resistance on welds or weld metal specimens. Such special tests which are pertinent to the intended application may be conducted as agreed upon between the manufacturer and the purchaser. This section is included for the guidance of those who desire to specify special tests.

Corrosion or Scaling Tests.—Tests of joint specimens have the advantage that the joint design and welding sequence can be made identical to that being used in fabrication. They have the disadvantage of being a test of the combined properties of the weld metal, the heat-affected zone of the base metal, and the unaffected base metal. Furthermore, it is difficult to obtain reproducible data if a difference exists between the corrosion or oxidation rates of the various metal structures (weld metal, heat-affected zone and unaffected base metal). Test samples cannot be readily standardized if welding sequence and joint design are to be considered variables. Joint specimens for corrosion tests should not be used for qualifying welding procedures using approved materials.

The heat treatments, surface finish and marking of the specimens prior to testing should be in accordance with standard practices for tests of similar alloys in the wrought or cast forms. The testing procedure should correspond to the Recommended Practice for Conducting Plant Corrosion Tests (ASTM Designation: A 224), or the Tentative Recommended Practice for Boiling Nitric Acid Test for Corrosion-Resisting Steels (ASTM Designation: A 262).

Tests for Mechanical Properties.—The tensile properties, bend ductility and soundness of welds produced using filler metal which conforms with these specifications is frequently determined during procedure qualification. It should be realized that the variables in the process, such as current, voltage, and welding speed; variables in the shielding medium, such as the gas mixture or flux; variables in the manual dexterity of the welder; and variables in the composition of the base metal influence the results which may be obtained. When properly controlled, however, these filler metals will give sound welds under widely varying conditions with tensile strength and ductility similar to that obtained by the manual covered arc welding electrodes. Tensile and elongation requirements for manual arc welding (covered) electrodes as specified in the Tentative Specifications for Corrosion Resisting Chromium and Chromium-Nickel Steel Welding Electrodes (AWS Designation: A5.4; ASTM Designation: A 298) are as shown in Table A.

When supplementary tests for mechanical properties are specified, the procedures should be in accordance with the Standard Methods of Mechanical Testing of Welds of the American Welding Society.[5]

TABLE A.—TENSILE REQUIREMENTS FOR ALL-WELD METAL.

Series	Tensile Strength, min, psi	Elongation in 2 in. min, per cent	Heat treatment
E 308	80 000	35	none
E 309	80 000	35	none
E 310	80 000	30	none
E 316	80 000	30	none
E 317	80 000	30	none
E 330	75 000	25	none
E 347	80 000	30	none
E 410	70 000	20	[a]
E 430	70 000	20	[b]
E 502	60 000	20	[a]

[a] Specimen shall be heated to between 1550 and 1600 F and held for 2 hr, furnace cooled at a rate not exceeding 100 F per hr to 1100 F, and air cooled.

[b] Specimen shall be heated to between 1400 and 1450 F and held for 4 hr, furnace cooled at a rate not exceeding 100 F per hr to 1100 F and air cooled.

[5] Available as a separate reprint from The American Welding Society, 345 East 47th St., New York 17, N. Y., price 50 cents.

SPECIFICATION FOR CARBON AND ALLOY STEEL FORGINGS FOR PRESSURE VESSEL SHELLS

SA-372

(IDENTICAL WITH ASTM SPECIFICATION A 372-60)

It is recommended, when semi-finished steel is desired to process these forgings, that the latest issue of the Standard Specifications for Steel Blooms, Billets, and Slabs for Forgings (ASTM Designation: A 273 for Carbon Steel and A 274 for Alloy Steel)[3] be used. When seamless pipe, seamless tubing, or plates are desired to process these forgings, the latest issue of the applicable ASTM seamless steel pipe, seamless tubing, or plate specification should be used. This will enable the forger to select semi-finished material of such chemistry as he desires.

Scope

1. (*a*) This specification covers relatively thin-walled forgings made from three classes of carbon steel and two classes of alloy steel. It also includes the integral forging of ends of seamless pipe or tubing for pressure vessel shells. The materials covered by this specification are not intended for use when they will be subjected to welding. The term "class" is used to distinguish between materials of different tensile strengths and material classification. Classes I to III, inclusive, cover carbon steel and classes IV and V, alloy steel. The forgings are usually produced by cupping and drawing slabs or plates, piercing and drawing billets, or by closing in the open ends of the shells thus produced or the ends of seamless pipe or tubing.

NOTE.—When working to the chemical and tensile requirements of this specification the influence of wall thickness and cooling rate will necessarily eliminate certain forging sizes in each class.

(*b*) Supplementary requirements (Paragraphs S1 to S4) of an optional nature are provided. These shall apply only when specified by the purchaser.

Basis of Purchase

2. The purchaser shall specify in the inquiry, contract, and order, the class of steel desired; and any supplementary requirements, exceptions, modifications, or agreements with regard to the provisions of this specification.

Process

3. The steel shall be made by either or both of the following processes: open-hearth or electric-furnace.

Manufacture

4. The forgings shall be produced by the cupping of slabs or plates, the piercing of billets or plates, and the drawing of the cups produced by the slab-cupping or billet-piercing method to produce semi-finished forgings. The semi-finished forgings, or seamless steel pipe or tubing, shall be forged at the open end or ends by spinning, swedging or pressing. In all cases, there shall be sufficient discard to insure sound metal in the completed forging.

Prolongations for Tests

5. Suitable test rings shall be cut from the forgings to provide material for tests as required in Sections 14 and 15 before closing in open ends. Such prolongations are not required when sample completed heat treated forgings are selected for test specimens.

Machining

6. (*a*) When so specified, machining of the interior and/or the exterior surface of the forging may be performed before or after heat treatment.

(*b*) The interior surface of all forgings shall be freed from scale sufficiently to permit inspection.

Heat Treatment

7. (*a*) All forgings shall receive a heat treatment as prescribed in Paragraph (*b*) after the completion of all forging operations.

(*b*) At the option of the manufacturer classes I, II, III, and IV forgings shall be normalized or normalized and tempered or, provided the heat treatment is followed by magnetic particle inspection in accordance with Section 13, they may be oil quenched and tempered. Class V forgings shall be oil quenched and tempered, and inspected in accordance with Section 13. These heat treating operations are described as follows:

Normalizing.—The forgings shall be reheated to and held at the proper temperature above the upper critical temperature for a sufficient time to effect the desired transformation and then withdrawn from the furnace and allowed to cool in air. A furnace charge

TABLE I.—CHEMICAL REQUIREMENTS.

Elements	Class I		Class II		Class III		Class IV	
	Ladle Analysis	Check Analysis	Ladle Analysis	Check Analysis	Ladle Analysis	Check Analysis	Ladle Analysis	Check Analysis
Carbon, per cent	0.30 max	0.34 max	0.40 max	0.44 max	0.48 max	0.53 max	0.40 to 0.50	0.37 to 0.53
Manganese, per cent	1.00 max	1.06 max	1.29 max	1.35 max	1.65 max	1.71 max	1.49 to 1.80	1.35 to 1.85
Phosphorus, max, per cent	0.04	0.05	0.04	0.05	0.04	0.05	0.04	0.05
Sulfur, max, per cent	0.05	0.06	0.05	0.06	0.05	0.06	0.04	0.05
Silicon, per cent	0.15 to 0.30	0.13 to 0.33	0.15 to 0.30	0.13 to 0.33	0.15 to 0.30	0.13 to 0.33	0.15 to 0.35	0.13 to 0.37
Chromium, per cent	...	...	...	...	...	...	...	...
Nickel, per cent	...	...	...	...	...	...	...	...
Molybdenum, per cent	...	...	...	...	...	...	0.17 to 0.27	0.14 to 0.30

Elements	Class V									
	Type A		Type B		Type C		Type D		Type E	
	Ladle Analysis	Check Analysis	Ladle Analysis	Check Analysis	Ladle Analysis	Check Analysis	Ladle Analysis	Check Analysis	Ladle Analysis	Check Analysis
Carbon, per cent	0.26 to 0.34	0.23 to 0.37	0.31 to 0.39	0.28 to 0.42	0.26 to 0.34	0.23 to 0.37	0.31 to 0.39	0.28 to 0.42	0.35 to 0.50	0.32 to 0.53
Manganese, per cent	0.40 to 0.70	0.36 to 0.74	0.70 to 1.00	0.65 to 1.05	0.70 to 1.00	0.65 to 1.05	0.75 to 1.05	0.70 to 1.10	0.75 to 1.05	0.70 to 1.10
Phosphorus, max, per cent	0.04	0.05	0.04	0.05	0.04	0.05	0.04	0.05	0.04	0.05
Sulfur, max, per cent	0.04	0.05	0.04	0.05	0.04	0.05	0.04	0.05	0.04	0.05
Silicon, per cent	0.15 to 0.35	0.13 to 0.37	0.15 to 0.35	0.13 to 0.37	0.15 to 0.35	0.13 to 0.37	0.15 to 0.35	0.13 to 0.37	0.15 to 0.35	0.13 to 0.37
Chromium, per cent	0.80 to 1.15	0.74 to 1.21	0.80 to 1.15	0.74 to 1.21	0.40 to 0.65	0.36 to 0.69	0.40 to 0.65	0.36 to 0.69	0.80 to 1.15	0.74 to 1.21
Nickel, per cent	...	...	...	...	0.40 to 0.70	0.37 to 0.73	0.40 to 0.70	0.37 to 0.73	...	...
Molybdenum, per cent	0.15 to 0.25	0.12 to 0.28	0.15 to 0.25	0.12 to 0.28	0.15 to 0.25	0.12 to 0.28	0.15 to 0.25	0.12 to 0.28	0.15 to 0.25	0.12 to 0.28

thus treated is termed a normalizing charge.

Quenching.—The forgings shall be reheated to and held at the proper temperature, above the upper critical temperature, but in no case exceeding 1700 F, for a sufficient time to effect the desired transformation and then quenched in oil. A furnace charge thus treated is termed a quenching charge.

Tempering.—After normalizing or quenching the forgings shall be reheated to a temperature below the transformation range but not less than 850 F for classes I, II, III, and IV forgings and not less than 1100 F for class V forgings and held at this temperature at least 1 hr per inch of wall thickness, and then cooled under suitable conditions. A furnace charge thus treated is termed a tempering charge.

Chemical Composition

8. The steel shall conform to the requirements for chemical composition prescribed in Table I.

Ladle Analysis

9. An analysis of each heat of steel shall be made by the manufacturer to determine the percentages of the elements specified in Table I. This analysis shall be made from a test ingot taken during the pouring of the heat. The chemical composition thus determined shall be reported to the purchaser or his representative and shall conform to the requirements for ladle analysis prescribed in Table I.

Check Analysis

10. An analysis may be made by the purchaser from a forging representing each heat. Drillings for analysis may be taken from the forging, or from a prolongation, or from a test specimen. The chemical composition thus determined shall conform to the requirements for check analysis prescribed in Table I.

TABLE II.—TENSILE REQUIREMENTS.

Class	Tensile Strength, min, psi	Yield Strength, min, psi	Elongation in 2 in., min, per cent
I	60 000	35 000	20
II	75 000	45 000	18
III	90 000	55 000	15
IV	105 000	65 000	15
V	120 000	70 000	18

Tensile Properties

11. (*a*) The material shall conform to the requirements for tensile properties prescribed in Table II, when tested in accordance with the latest issue of the Methods and Definitions for Mechanical Testing of Steel Products (ASTM Designation: A 370).

(*b*) The yield strength prescribed in Table II shall be determined by the offset method, using an offset value of 0.2 per cent of the gage length, or by the total extension under load method, using an extension value of 0.005 in. per inch (0.5 per cent).

Flattening Requirements

12. The test shall consist of flattening a ring section between parallel plates. No breaks or cracks in the metal shall occur until the distance between the plates is less than that shown in Table III.

Magnetic Particle Inspection

13. All liquid quenched and tempered forgings shall be subsequently given a magnetic particle inspection in accordance with the latest issue of the Standard Methods of Magnetic Particle Testing and Inspection of Heavy Steel Forgings (ASTM Designation: A 275).

Test Specimens

14. (*a*) Tension test specimens shall be taken from the test rings which have been heat treated with the forgings they represent or from a finished forging after heat treatment as provided in Section 5. The specimens shall be taken from the side wall where the thickness is substantially uniform. The axis of the specimen shall be parallel to the axis of the forging and the specimen shall not be flattened between gage marks.

TABLE III.—DISTANCE BETWEEN PLATES FOR FLATTENING TESTS.

Class	Distance Between Plates, min, in.
I	0.5 *D*
II	0.6 *D*
III	0.65 *D*
IV	0.7 *D*
V	0.8 *D*

NOTE.—*D* = outside diameter in in., and *t* = wall thickness in in.
This table is for forgings with a D/t ratio of 16 and over. Forgings having a D/t ratio less than 16 are not contemplated in the scope of this specification.

(*b*) Flattening test specimens shall be taken from the test rings which have been heat treated with the forgings they represent or from a finished forging after heat treatment as provided in Section 5 by cutting a ring section not less than 2½ in. in length where the thickness of side wall of the forging is substantially uniform.

(*c*) The number and location of tests from semi-finished forgings made to this specification shall be a matter of agreement between the manufacturer and the purchaser.

(*d*) In order to provide test specimens from quenched and tempered forgings which are representative, forgings for test rings shall be quenched only on the outside if the forgings they represent are quenched only on the outside.

(*e*) The tension test specimen shall be machined to either of the two forms shown in Figures 1 and 2.

Number of Tests

15. (*a*) When the forgings are heat treated in a batch furnace, one tension specimen and one flattening ring shall be tested from one of the forgings from each heat in the charge or from test rings from one of the forgings from each heat in the charge. One tension specimen and one flattening ring shall represent not more than 200 forgings.

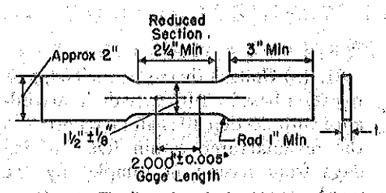

NOTE 1.—The dimension *t* is the thickness of the test specimen as provided for in the applicable material specifications.
NOTE 2.—The reduced section shall be parallel within 0.005 in. and may have a gradual taper in width from the ends toward the center, with the ends not more than 0.005 in. wider than the center.
NOTE 3.—The ends of the specimen shall be symmetrical with the center line of the reduced section within 0.05 in.

FIG. 1.—Rectangular Tension Test Specimen with 2-in. Gage Length.

(*b*) When the forgings are heat treated in a continuous furnace, one tension specimen and one flattening ring shall be tested from a forging selected from each heat in each 4 hr or less production or from a test ring, from one of the forgings from each heat in each 4 hr or less production. One tension specimen and one flattening ring shall represent not more than 200 forgings.

(*c*) If any test specimen fails because of mechanical reasons, such as testing machine failure or improper specimen preparation, it may be discarded and another specimen taken.

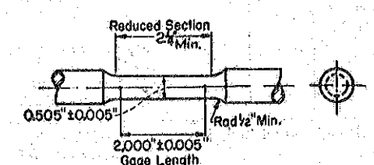

NOTE 1.—The gage length and fillets shall be as shown, but the ends may be of any shape to fit the holders of the testing machine in such a way that the load shall be axial.
NOTE 2.—The reduced section shall have a gradual taper from the ends towards the center, with the ends not more than 0.005 in. larger in diameter than the center.

FIG. 2.—Standard Round Tension Test Specimen with 2-in. Gage Length.

Retests

16. (*a*) If the results of the mechanical tests of a test specimen do not conform to the requirements specified, the manufacturer may retest two specimens for each one that failed and each of these two specimens must meet the test requirements.

(*b*) If the fracture of a tension test specimen is outside of the middle half of the gage length as indicated by scribe scratches marked on the specimen before testing, and the elongation requirements are not met, a retest shall be allowed.

(*c*) If the results of the mechanical tests do not conform to the requirements specified because a flaw develops in the test specimen, a retest shall be allowed if the defect is not caused by ruptures, cracks, or flakes in the steel.

(*d*) If the results of the mechanical tests do not conform to the requirements specified, the forgings represented by the test may be reheat treated after which all required tests must be met.

Workmanship

17. (*a*) The forgings shall conform to the sizes and shapes specified by the purchaser.

(*b*) The thickness of the parallel walls of each forging shall not be less than that specified. If the thickness of a portion of the wall of a forging is less than that specified, the forgings may be accepted by the purchaser, provided that such irregularity will not require lowering the allowable working pressure below that for which the forging is designed.

Finish

18. The forging shall be free from injurious defects. Machining is permitted to remove surface defects provided the minimum wall thickness is maintained. All forgings shall have a workmanlike finish.

Marking

19. Each forging shall be legibly marked, either by stenciling or stamping by the manufacturer to identify the manufacturer, his test identification number, and the specification number and class of forging specified. All test specimens shall be stamped with the manufacturer's test identification.

Inspection

20. The inspector representing the purchaser shall have free entry, at all times, while work on the contract of the purchaser is being performed, to all parts of the manufacturer's works which concern the manufacture of the material ordered. The manufacturer shall afford the inspector, without charge, all reasonable facilities, to satisfy him that the material is being furnished in accordance with this specification. All tests (except check analysis), and inspection shall be made at the place of manufacture prior to shipment, unless otherwise specified, and shall be so conducted as not to interfere unnecessarily with the operation of the works.

Rejection

21. (*a*) Unless otherwise specified, any rejection based on tests made in accordance with Section 10 shall be reported to the manufacturer within five working days from receipt of samples by the purchaser.

(*b*) Material which shows injurious defects subsequent to its acceptance at the manufacturer's works will be rejected, and the manufacturer shall be notified.

Rehearing

22. Samples tested in accordance with Section 10 that represent rejected material shall be preserved two weeks from the date of the test report. In case of dissatisfaction with the results of the tests, the manufacturer may make claim for rehearing within that time.

SUPPLEMENTARY REQUIREMENTS

One or more of the following supplementary requirements shall apply only when specified by the purchaser on the inquiry, contract, or order Details of these supplementary requirements shall be agreed upon by the manufacturer and the purchaser.

Grain Size

S1. When fine-grain steel is required, the austenite grain size shall be fine grain as defined and determined in the Standard Classification of Austenite Grain Size in Steels (ASTM Designation: E 19).

Removal of Defects

S2. The method of removing surface defects prescribed in Section 18 may be waived and the method used may then be a matter of agreement between the manufacturer and the purchaser.

Rough Machining

S3. Rough machining shall be performed in a manner and in the sequence of operations as agreed between the manufacturer and the purchaser.

Surface Finish

S4. The inner, outer, or both surfaces of the forgings shall be machined.

SPECIFICATION FOR SEAMLESS AUSTENITIC STEEL PIPE FOR HIGH-TEMPERATURE CENTRAL-STATION SERVICE

SA-376

(IDENTICAL WITH ASTM SPECIFICATION A 376-61T)

Scope

1. (*a*) These specifications are intended as a general guide for the purchase of austenitic steel pipe and to serve as a basis for agreement between the manufacturer and the purchaser as to details not specifically covered.

(*b*) These specifications cover seamless austenitic steel pipe intended for high-temperature central-station service. Nine grades are covered. The "H" grades are specifically intended for high-temperature service.

(*c*) Optional supplementary requirements (Paragraphs S1 through S7) are provided. These paragraphs call for additional tests to be made at the expense of the purchaser and when desired shall be so stated in the order, together with the number of such tests required.

Process

2. The steel shall be made by the electric-furnace process or other processes approved by the purchaser.

Manufacture

3. At the manufacturer's option, pipe may be furnished either hot-finished or cold-finished, with, where necessary, a suitable finishing treatment.

Discard

4. A sufficient discard shall be made from each ingot to secure freedom from injurious piping and undue segregation.

Heat Treatment

5. (*a*) All pipe shall be furnished in the heat treated condition.

(*b*) *Grades TP304, TP316, TP321, TP347, and TP348.*—The heat treatment procedure shall consist of heating the material to a minimum temperature of 1900 F and quenching in water or rapidly cooling by other means. Controlled structural or special service characteristics shall be specified as a guide for the most suitable heat treatment. If the final heat treatment is at a temperature under 1900 F and is so specified on the order, each pipe shall be stenciled with the final heat treatment temperature in degrees Fahrenheit after the suffix "HT." If no final heat treatment is applied and is so specified in the order, each pipe shall be stenciled "HT-O."

(*c*) *Grades TP304H, TP316H, TP321H, and TP347H.*—If cold working is involved in processing, the minimum solution treating temperature for grades TP321H and TP347H shall be 2000 F, and for grades TP304H and TP316H, 1800 F. If the material is hot-rolled, the minimum solution treating temperatures for grades TP321H and TP347H shall be 1925 F, and for grades TP304H and TP316H, 1800 F.

Chemical Composition

6. The steel shall conform to the requirements as to chemical composition prescribed in Table I.

TABLE I.—CHEMICAL REQUIREMENTS.

Grade	TP 304	TP 304H	TP 316	TP 316H	TP 321	TP 321H	TP 347	TP 347H	TP 348[c]
Carbon, per cent	0.08 max	0.04 to 0.10	0.08 max	0.04 to 0.10	0.08 max	0.04 to 0.10	0.08 max	0.04 to 0.10	0.08 max
Manganese, max, per cent	2.00	2.00	2.00	2.00	2.00	2.00	2.00	2.00	2.00
Phosphorus, max, per cent	0.030	0.030	0.030	0.030	0.030	0.030	0.030	0.030	0.030
Sulfur, max, per cent	0.030	0.030	0.030	0.030	0.030	0.030	0.030	0.030	0.030
Silicon, max, per cent	0.75	0.75	0.75	0.75	0.75	0.75	0.75	0.75	0.75
Nickel, per cent	8.0 to 11.0	8.0 to 11.0	11.0 to 14.0	11.0 to 14.0	9.0 to 13.0	9.0 to 13.0	9.0 to 13.0	9.0 to 13.0	9.0 to 13.0
Chromium, per cent	18.0 to 20.0	18.0 to 20.0	16.0 to 18.0	16.0 to 18.0	17.0 to 20.0	17.0 to 20.0	17.0 to 20.0	17.0 to 20.0	17.0 to 20.0
Molybdenum, per cent	....	....	2.0 to 3.0	2.0 to 3.0	....	....	....	....	....
Titanium, per cent	....	....	....	....	[a]	[e]	....	....	....
Columbium plus tantalum, per cent	....	....	....	....	....	....	[b]	[d]	[b]
Tantalum, per cent	....	....	....	....	....	....	....	....	0.10

[a] The titanium content shall be not less than five times the carbon content and not more than 0.60 per cent.

[b] The columbium plus tantalum content shall be not less than ten times the carbon content and not more than 1.00 per cent.

[c] This grade is intended for special purpose applications.

[d] The columbium plus tantalum content shall be not less than eight times the carbon content and not more than 1.00 per cent.

[e] The titanium content shall be not less than four times the carbon content and not more than 0.60 per cent.

Ladle Analysis

7. An analysis of each heat of steel shall be made by the steel manufacturer to determine the percentages of the elements specified in Section 6. The chemical composition thus determined, or that determined from a check analysis made by the pipe manufacturer if the latter has not manufactured the steel, shall be reported to the purchaser or his representative, and shall conform to the requirements specified in Section 6.

Check Analysis

8. (*a*) At the request of the purchaser, an analysis of one billet from each heat or two pipes from each lot[3] shall be made by the manufacturer. A lot of pipe shall consist of the following:

Nominal Diameter, in.	Lengths of Pipe in Lot
Under 2	400 or fraction thereof
2 to 5, incl.	200 or fraction thereof
6 and over	100 or fraction thereof

(*b*) Samples for chemical analysis, except for spectrochemical analysis, shall be taken in accordance with the Method of Sampling Steel, Cast Iron, Open-Hearth Iron, and Wrought Iron for Determination of Chemical Composition (ASTM Designation: E 59). The results of these analyses shall be reported to the purchaser or his representative, and shall conform to the requirements specified in Table I.

(*c*) If the analysis of one of the tests specified in Sections 7 or 8(*a*) does not conform to the requirements specified in Section 6, an analysis of each billet or pipe from the same heat or lot may be made, and all billets or pipe conforming to the requirements shall be accepted.

Tensile Properties

9. (*a*) The tensile properties of the material, at room temperature, shall conform to the requirements prescribed in Table II.

(*b*) The yield point shall be determined by the drop of the beam, by the halt in the gage of the testing machine, by the use of dividers, or by other approved methods. When a definite yield point is not exhibited, the yield strength corresponding to a permanent offset of 0.2 per cent of the gage length of the specimen, or to a total extension of 0.5 per cent of the gage length under load shall be determined.

[3] A lot shall consist of the number of lengths specified in Section 8, of the same size and wall thickness from any one heat of steel.

Bending Properties

10. For pipe 2 in. and under in nominal diameter, a sufficient length of pipe shall stand being bent cold through 90 deg around a cylindrical mandrel which is twelve times the nominal diameter of the pipe, without developing cracks. When ordered for close coiling, the pipe shall stand being bent cold through 180 deg around a cylindrical mandrel, the diameter of which is eight times the nominal diameter of the pipe, without failure.

Flattening Test

11. For pipe over 2 in. in nominal diameter, a section of pipe not less than 2½ in. length shall be flattened cold between parallel plates until the opposite walls of the pipe meet. No cracks or breaks in the metal shall occur until the distance between the plates is less than that calculated for the value of "H" by the following formula:

$$H = \frac{(1 + e)t}{e + t/D}$$

where:

H = distance between flattening plates in inches,
t = nominal wall thickness of pipe in inches,
D = actual outside diameter of pipe in inches, and
e = deformation per unit length (constant for a given grade of steel, 0.09 for austenitic steels).

Evidence of laminations or burnt material shall not develop during the entire flattening process.

Hydrostatic Test

12. (*a*) Unless otherwise agreed upon between the manufacturer and the purchaser, each length of pipe shall be tested by the manufacturer to a hydrostatic pressure which will produce in the pipe wall a stress of 50 per cent of the minimum specified yield point at room temperature. This pressure shall be determined by the following formula:

$$P = \frac{2St}{D}$$

where:

P = minimum hydrostatic test pressure in pounds per square inch,
S = allowable fiber stress of 15,000 psi,
t = nominal wall thickness in inches, and
D = outside diameter in inches.

(*b*) The maximum hydrostatic test pressure shall not exceed 2500 psi for nominal sizes 3 in. and under, or 2800 psi for all nominal sizes over 3 in. The hydrostatic pressure shall be maintained for not less than 5 sec.

NOTE 2.—When requested by the purchaser and so stated in the order, pipe in sizes 12 in. in nominal diameter and smaller shall be tested to one and one-half times the specified working pressure provided the fiber stress corresponding to those test pressures does not exceed one-half the minimum specified yield point of the material as determined by the above formula. When one and one-half times the working pressure exceeds 2800 psi, the hydrostatic test pressure shall be a matter of agreement between the purchaser and the manufacturer.

Test Specimens and Methods of Testing

13. (*a*) The test specimens and the tests required by these specifications shall conform to those described in the Methods and Definitions for the Mechanical Testing of Steel Products (ASTM Designation: A 370).

(*b*) Specimens cut either longitudinally or transversely shall be acceptable for the tension test.

(*c*) Test specimens for the bend and flattening tests shall consist of sections cut from a pipe. Specimens for flattening tests shall be smooth on the ends and free from burrs, except when made on crop ends.

(*d*) All routine check tests shall be made at room temperature.

Number of Tests

14. (*a*) The transverse or longitudinal tension test specified in Section 9 shall be performed on 1 per cent of the pipe from each lot.[5]

(*b*) For material heat treated in a batch type furnace, tests shall be made as follows on 5 per cent of the pipe from each heat-treated lot.[5] Results of these tests shall be reported to the purchaser or his representative:

The bend test specified in Section 10 for pipe 2 in. and under in nominal diameter, and
The flattening test specified in Section 11 for pipe over 2 in. in nominal diameter.

(*c*) For material heat treated by the continuous process, the tests specified in Paragraph (*b*) shall be made on a sufficient number of pipe to constitute 5 per cent of the lot,[5] but in no case less than 2 pipes.

(*d*) If any test specimen shows defective machining or develops flaws, it may be discarded and another specimen substituted.

(*e*) If the percentage of elongation of any tension test specimen is less than that specified in Section 9(*a*) and any part of the fracture is more than ¾ in. from the center of the gage length as indicated by scribe scratches marked on the specimen before testing, a retest shall be allowed. If a specimen breaks in an inside or outside surface flaw, a retest shall be allowed.

(*f*) Each length of pipe shall be subjected to the hydrostatic test specified in Section 12.

(*g*) Retests may be made in accordance with Section 22 (*b*).

TABLE II.—TENSILE REQUIREMENTS.

	Longitudinal	Transverse
Tensile strength, min, psi	75 000[a]	
Yield strength, min, psi	30 000	
Elongation in 2 in., min, per cent:		
Basic minimum elongation for walls 5/16 in. and over in thickness, strip tests, and for all small sizes tested in full section	35	25
When standard round 2-in. gage length test specimen is used	28	20
For strip tests, the width of the gage section shall be 1½ in. and a deduction for each ½32-in. decrease in wall thickness below 5/16 in. from the basic minimum elongation of the following percentage	1.75[b]	1.25[b]

[a] For grade TP 304, in nominal diameter of 8 in. and larger and in schedules 140 and heavier, the required minimum tensile strength shall be 70,000 psi.

[b] The following table gives the computed minimum values:

Wall Thickness, in.	Elongation in 2 in., min, per cent	
	Longitudinal	Transverse
5/16 (0.312)	35.00	25.00
9/32 (0.281)	33.25	23.75
1/4 (0.250)	31.50	22.50
7/32 (0.219)	29.75	...
3/16 (0.188)	28.00	...
5/32 (0.156)	26.25	...
1/8 (0.125)	24.50	...
3/32 (0.094)	22.75	...
1/16 (0.062)	21.00	...

NOTE 1.—Table II gives the computed minimum elongation values for each ½32-in. decrease in wall thickness. When the wall thickness lies between two values shown above, the minimum elongation value is determined by the following formula:

Longitudinal: $E = 56t + 17.50$
Transverse: $E = 40t + 12.50$

where:

E = elongation in 2 in. in per cent, and
t = actual thickness of specimen, in inches.

Retest

15. If the results of any mechanical tests or any lot[5] do not conform to the requirements specified in Sections 9, 10, or 11, retests shall be made on additional pipes of double the original number from the same lot, each of which shall conform to the requirements specified.

Retreatment

16. If individual lengths of pipe selected to represent any lot fail to conform to the test requirements specified in Sections 9, 10 or 11, the lot may be reheat-treated and resubmitted for test except that any individual lengths which meet the test requirements before retesting will be acceptable. The manufacturer may retreat the pipe, but not more than twice, except with the approval of the purchaser on the basis of satisfactory metallurgical evidence that the cause of the failure of the test is curable, and the quality of the material is satisfactory. Retests shall be made in accordance with Section 15. In case of reheat-treatment, the purchaser shall be advised that retreatment has been necessary.

[5] The term "lot" applies to all pipe of the same nominal size and wall thickness (or schedule) which is produced from the same heat of steel and subjected to the same finishing treatment in a continuous furnace; when final heat treatment is in a batch type furnace, the lot shall include only that pipe which is heat treated in the same furnace charge. When no heat treatment is performed following final forming operations, the lot shall include hot-rolled material only or cold-drawn material only.

Permissible Variations in Weights and Dimensions

17. (*a*) *Weight.*—The weight of any length of pipe in nominal sizes of 12 in. and under shall not vary more than 6.5 per cent over and 3.5 per cent under that specified. Unless otherwise agreed upon between the manufacturer and the purchaser, pipe in sizes 4 in. and smaller may be weighed in convenient lots; pipe in sizes larger than 4 in. shall be weighed separately.

NOTE 3.—A system of standard pipe sizes has been approved by the American Standards Association as American Standard for Wrought Steel and Wrought Iron Pipe (ASA No. B36.10—1959). Copies of this American Standard are available from The American Society of Mechanical Engineers, 345 E. 47th St., New York 17, N. Y.

(*b*) *Diameter.*—Variations in outside diameter shall not exceed the following:

Nominal Diameter, in.	Permissible Variations in Outside Diameter, in.	
	Over	Under
⅛ to 1½, incl.	1/64 (0.015)	1/32 (0.031)
Over 1½ to 4, incl.	1/32 (0.031)	1/32 (0.031)
Over 4 to 8, incl.	1/16 (0.062)	1/32 (0.031)
Over 8 to 12, incl.	3/32 (0.093)	3/32 (0.031)

(*c*) *Thickness.*—The minimum wall thickness at any point shall not be more than 12.5 per cent under the nominal wall thickness specified.

NOTE 4.—The minimum wall thickness on inspection is shown in the Appendix.

Lengths

18. Pipe lengths shall be in accordance with the following regular practice:

(*a*) The lengths required shall be specified in the order. No pipe shall be under the specified length and not more than ¼ in. over that specified.

(*b*) No jointers are permitted unless otherwise specified.

Ends

19. Unless otherwise specified, pipe shall be furnished with plain ends. All burrs at the ends of the pipe shall be removed.

Finish[6]

20. (*a*) The finished pipe shall be reasonably straight and free from injurious defects. At the discretion of the inspector representing the purchaser, finished pipe shall be subject to rejection if surface defects acceptable under Paragraph (*c*) are not scattered, but appear over a large area in excess of what is considered a workmanlike finish.

(*b*) *Depth of Injurious Defects.*—All defects shall be explored for depth. When the depth is in excess of 12½ per cent of the nominal wall thickness or encroaches on the minimum wall thickness, such defects shall be considered injurious.

(*c*) *Machining or Grinding Defects not Classified as Injurious.*—Surface defects not classified as injurious shall be treated as follows:

(*1*) Pipe showing scabs, seams, laps, tears, or slivers not deeper than 5 per cent of the nominal wall thickness need not have these defects removed. If deeper than 5 per cent, such defects shall be removed by machining or grinding.

(*2*) Pipe showing inside or outside surface checks (fish scale) $\frac{1}{64}$ in. or less in depth need not have these defects removed. Such defects over $\frac{1}{64}$ in. but not more than $\frac{1}{32}$ in. in depth shall be removed by machining or grinding. Pipe on which these defects are more than $\frac{1}{32}$ in. in depth shall be rejected, unless the manufacturer can demonstrate to the purchaser that the defects are not injurious as defined in Paragraph (*b*).

(*3*) Mechanical marks or abrasions[7] and pits shall be acceptable without grinding or machining provided the depth does not exceed the limitations set forth in Paragraph (*b*) and if not deeper than $\frac{1}{16}$ in. If such defects are deeper than $\frac{1}{16}$ in. but not deeper than 12½ per cent of the nominal wall thickness, they shall be removed by grinding or machining to sound metal.

[6] Cupped and drawn pipe shall be cleaned by pickling or blasting prior to inspection. The generally roughened inside surface incident to the manufacture of cupped and drawn pipe and resulting from the removal of imbedded scale shall not be considered cause for rejection, providing the pipe meets the requirements for surface defects described in Section 20(*a*), (*b*), and (*c*).

[7] Marks and abrasions are defined as cable marks, dinges, guide marks, roll marks, ball scratches, scores, die marks, etc.

(*4*) When defects have been removed by grinding or machining, the outside diameter at the point of grinding or machining may be reduced by the amount so removed. Should it be impracticable to secure a direct measurement, the wall thickness at the point of grinding, or at a defect not required to be removed, shall be determined by deducting the amount removed in grinding, or the depth of the defect, from the minimum measured wall thickness at the ends of the pipe, and the remainder shall not be less than 87.5 per cent of the nominal wall thickness.

(*5*) Machining or grinding shall follow the inspection at the mill of the pipe as rolled and shall be followed by supplementary visual inspection.

(*d*) *Repair by Welding.*—Repair of injurious defects shall be permitted only subject to the approval of the purchaser and with the further understanding that the composition of the welding rod shall be suitable for the composition of metal being welded. Welding of injurious defects in no case shall be permitted when the depth of defect exceeds 33⅓ per cent of the nominal pipe wall thickness or the length of repair exceeds 25 per cent of the nominal diameter of the pipe. Defects shall be thoroughly chipped out before welding, and then heat-treated in accordance with Section 4. Each length of repaired pipe shall be retested hydrostatically in accordance with Section 12.

(*e*) All pipe shall be pickled free from scale.

(*f*) Only qualified operators and procedures in accordance with the ASME Boiler and Pressure Vessel Code, Section IX shall be used. Local grinding following welding and retreating shall have a finish whose roughness height is not greater than 250 microinches (see the American Standard for Surface Roughness, Waviness, and Lay (ASA No.: B46.1—1955)).

Marking

21. (*a*) Each length of pipe manufactured in accordance with these specifications shall be legibly marked by stenciling, with the manufacturer's private identifying mark, with the designation A 376, the length, the hydrostatic test pressure, the grade, and an additional symbol S if the pipe conforms to the supplementary requirements specified in Paragraphs S2 to S7, the ASA schedule number, and the heat number or manufacturer's number by which the heat can be identified. Marking shall begin approximately 12 in. from end of each length. On pipe sizes larger than 4 in. the weight shall be given. On small diameter pipe which is bundled, the above information may be legibly stamped on a metal tag securely attached to each bundle. When pipe marked as specified in this section is rejected, the designation A 376 shall be cancelled. Additional marking requirements for heat treatment are described in Section 5(*b*).

(*b*) No steel indentation stamping shall be done without the purchaser's consent.

(*c*) The marking paint or ink shall not contain any harmful metal or metal salts, such as zinc, lead, or copper, which will cause corrosive attack on heating.

(*d*) When it is specified that certain requirements of these specifications are to be completed by the purchaser upon receipt of the material, the manufacturer shall indicate that all requirements of the specifications have not been completed by a letter X, Y, or Z immediately following the specification number. This letter may be removed after completion of all requirements in accordance with these specifications. An explanation of specification requirements to be completed is provided in Section 22(*c*).

Inspection

22. (*a*) The inspector representing the purchaser shall have free entry, at all times while work on the contract of the purchaser is being performed, to all parts of the manufacturer's works that concern the manufacture of the material ordered. The manufacturer shall afford the inspector, without charge, all reasonable facilities to satisfy him that the material is being furnished in accordance with these specifications. All tests and inspection shall be made at the place of manufacture prior to shipment and at the manufacturer's expense, unless otherwise specified, and shall be so conducted as not to interfere unnecessarily with the operation of the works. When specified in the order, the manufacturer shall notify the purchaser in time so that he may have his inspector present to witness any part of the manufacture or tests that may be desired.

(*b*) Upon the purchaser's request and at the purchaser's expense, retests shall be made from sections of material removed from any part of the pipe. Failure to meet the requirements stated in these specifications shall be cause for rejection.

(*c*) *Certification.*—When agreed upon in writing between the manufacturer and the purchaser, a certification that the material conforms to the requirements of these specifications shall be the basis of acceptance of the material. Otherwise, the manufacturer shall report to the purchaser or his representative the results of the chemical analyses and mechanical tests made in accordance with these specifications. The certificate or report accomplished by the manufacturer shall include a statement of explanation for the letter added to the specification number (see Section 21 (*d*)), when all the requirements of these specifications have not been completed. The purchaser must certify that all requirements of the specifications have been completed before removal of the letter X, Y, or Z.

Rejection

23. Each length of pipe that develops injurious defects during shop working or application operations will be rejected, and the manufacturer shall be notified. No rejections under these or any other specifications shall be marked as specified in Section 21 for sale under these specifications except where such pipe fails to comply with the weight requirements alone, in which case it may be sold under the weight specifications with which it does comply.

SUPPLEMENTARY REQUIREMENTS FOR PIPE REQUIRING SPECIAL CONSIDERATION

S1. These requirements shall not be considered unless specified in the order, in which event the supplementary tests specified in Paragraphs S2 to S7 shall be made at the mill, unless otherwise agreed upon, at the purchaser's expense and witnessed by his inspector before shipment of the material.

Check Analysis

S2. Check analysis may be made on any length of pipe. Individual lengths failing to conform to the chemical requirements specified in Section 6 shall be rejected.

Transverse Tension Tests

S3. Transverse tension tests may be made on specimens from both ends of each length of pipe. This requirement applies only to pipe 8 in. and over in nominal diameter. If the specimen from either end of any length fails to conform to the mechanical properties specified in Section 9, that length shall be rejected.

Flattening Test

S4. The flattening test specified in Section 11 may be made on specimens from both ends of each length of pipe. This requirement applies only to pipe over 2 in. in nominal diameter. Crop ends may be used. If the specimen from either end of any length fails to conform to the specified requirements, that length shall be rejected.

Etching Tests

S5. The steel shall be homogeneous as shown by etching tests conducted in accordance with the Method of Macroetch Testing and Inspection of Steel Forgings (ASTM Designation: A 317). Etching tests shall be made on a cross-section from both ends of each pipe, and shall show sound and reasonably uniform material, free from injurious laminations, cracks and similar objectionable defects. If the specimen from either end of any length shows objectionable defects, one retest shall be permitted from that end. If this fails, the length shall be rejected. However, if removal of the defective end and subsequent retesting indicates the remainder of the length to be sound and reasonably uniform material, the manufacturer may offer the shortened length to the purchaser. Acceptance shall be a matter of agreement between the manufacturer and the purchaser.

Photomicrographs

S6. Photomicrographs at 100 diameters may be made from one end of each piece of pipe furnished in sizes 6 in. and larger in the as-furnished condition. Such photomicrographs shall be suitably identified as to pipe size, wall thickness, piece number, and heat. Such photomicrographs are for information only, and shall show the actual metal structure of the pipe as finished.

Ultrasonic Testing

S7. Each piece of pipe may be ultrasonically tested to determine its soundness throughout the entire length of the pipe in a manner to be agreed upon by the manufacturer and the purchaser. Failure to meet the requirements stated in these specifications shall be cause for rejection.

APPENDIX

TABLE III.—TABLE OF MINIMUM WALL THICKNESSES ON INSPECTION FOR NOMINAL (AVERAGE) PIPE WALL THICKNESSES.

NOTE 1.—The following formula, upon which this table is based, may be applied to calculate minimum wall thickness from nominal (average) wall thickness:

$$t_n \times 0.875 = t_m$$

where:
t_n = nominal (average) wall thickness in inches, and
t_m = minimum wall thickness in inches.

The wall thickness is expressed to three decimal places, the fourth decimal place being carried forward or dropped, in accordance with the Recommended Practices for Designating Significant Places in Specified Limiting Values (ASTM Designation: E 29).

NOTE 2.—This table is a master table covering wall thicknesses available in the purchase of different classifications of pipe, but it is not meant to imply that all of the walls listed therein are obtainable under this specification.

Nominal (Average) Thickness (t_n), in.	Minimum Thickness on Inspection (t_m), in.	Nominal (Average) Thickness (t_n), in.	Minimum Thickness on Inspection (t_m), in.	Nominal (Average) Thickness (t_n), in.	Minimum Thickness on Inspection (t_m), in.
0.068	0.060	0.294	0.257	0.750	0.656
0.088	0.077	0.300	0.262	0.812	0.710
0.091	0.080	0.307	0.269	0.843	0.738
0.095	0.083	0.308	0.270	0.864	0.756
0.113	0.099	0.312	0.273	0.875	0.766
0.119	0.104	0.318	0.278	0.906	0.793
0.125	0.109	0.322	0.282	0.937	0.820
0.126	0.110	0.330	0.289	0.968	0.847
0.133	0.116	0.337	0.295	1.000	0.875
0.140	0.122	0.343	0.300	1.031	0.902
0.145	0.127	0.344	0.301	1.062	0.929
0.147	0.129	0.358	0.313	1.093	0.956
0.154	0.135	0.365	0.319	1.125	0.984
0.156	0.136	0.375	0.328	1.156	1.012
0.179	0.157	0.382	0.334	1.218	1.066
0.187	0.164	0.400	0.350	1.250	1.094
0.188	0.164	0.406	0.355	1.281	1.121
0.191	0.167	0.432	0.378	1.312	1.148
0.200	0.175	0.436	0.382	1.343	1.175
0.203	0.178	0.437	0.382	1.375	1.203
0.216	0.189	0.438	0.383	1.406	1.230
0.218	0.191	0.500	0.438	1.438	1.258
0.219	0.192	0.531	0.465	1.500	1.312
0.226	0.198	0.552	0.483	1.531	1.340
0.237	0.207	0.562	0.492	1.562	1.367
0.250	0.219	0.593	0.519	1.593	1.394
0.258	0.226	0.600	0.525	1.750	1.531
0.276	0.242	0.625	0.547	1.781	1.558
0.277	0.242	0.656	0.574	1.812	1.586
0.279	0.244	0.674	0.590	1.968	1.722
0.280	0.245	0.687	0.601	2.062	1.804
0.281	0.246	0.718	0.629	2.343	2.050

SPECIFICATION FOR CHROMIUM-MOLYBDENUM STEEL PLATES FOR BOILERS AND OTHER PRESSURE VESSELS

SA-387

(IDENTICAL WITH ASTM SPECIFICATION A 387-61T)

Scope

1. (*a*) This specification covers two groups of chromium-molybdenum steel plates of five compositions intended for use in boilers and other pressure vessels for service at elevated temperature.

Group I is composed of three grades, each of flange and firebox qualities, containing not more than 1.5 per cent chromium and designated A, B, and C. The maximum thickness of flange quality plates in Group I shall be 2 in.; the maximum thickness for plates of firebox quality shall be 6 in.

Group II consists of two grades intended for mildly corrosive service as well as for elevated temperature service, each grade of firebox quality only, containing between 2 per cent and 3¼ per cent chromium and designated D and E. The maximum thickness of group II plates shall be 6 in.

(*b*) Welding technique is of fundamental importance and it is presupposed that welding procedures will be in accordance with approved method for these classes of materials.

General Conditions for Delivery

2. Material furnished under this specification shall conform to the applicable requirements of the current edition of the Specification for General Requirements for Delivery of Rolled Steel Plates of Flange and Firebox Qualities (ASTM Designation: A 20), except where otherwise specified in which case this specification will govern.

Process

3. (*a*) The steels shall be made by either of the following processes: open-hearth or electric-furnace.

(*b*) The steel for grade A of group I shall be coarse-grained steel have a carburized austenitic grain size of 1 to 5 as determined in accordance with the Methods for Estimating the Average Grain Size of Metals (ASTM Designation: E 112), and its Plate IV, by carburizing at 1700 F. for 8 hr. Conformation to this grain size of 70 per cent of the grains in the area examined shall constitute the basis of acceptance.

(*c*) Specific limitations on deoxidation practice or grain size requirements for grades other than grade A shall be a matter for agreement between the manufacturer and the purchaser.

TABLE I.—CHEMICAL REQUIREMENTS.

	Group I			Group II	
	Grade A	Grade B	Grade C	Grade D	Grade E
Carbon, max, per cent	0.21	0.17	0.17	0.15	0.15
Manganese, per cent:					
Ladle analysis	0.40 to 0.80	0.40 to 0.65	0.40 to 0.65	0.30 to 0.60	0.30 to 0.60
Check analysis	0.36 to 0.84	0.36 to 0.69	0.36 to 0.69	0.27 to 0.63	0.27 to 0.63
Phosphorus, max, per cent:					
Flange	0.040	0.040	0.040	0.035	0.035
Firebox	0.035	0.035	0.035	0.035	0.035
Sulfur, max, per cent:					
Flange	0.050	0.050	0.050	0.035	0.035
Firebox	0.040	0.040	0.040	0.035	0.035
Silicon, per cent:					
Ladle analysis	0.15 to 0.30	0.15 to 0.30	0.50 to 1.00	...	...
Check analysis	0.13 to 0.32	0.13 to 0.32	0.48 to 1.02	0.50 max	0.50 max
Chromium, per cent:					
Ladle analysis	0.50 to 0.80	0.80 to 1.15	1.00 to 1.50	2.00 to 2.50	2.75 to 3.25
Check analysis	0.40 to 0.85	0.74 to 1.21	0.94 to 1.56	1.88 to 2.62	2.63 to 3.37
Molybdenum, per cent:					
Ladle analysis	0.45 to 0.65	0.45 to 0.65	0.45 to 0.65	0.90 to 1.10	0.90 to 1.10
Check analysis	0.40 to 0.70	0.40 to 0.70	0.40 to 0.70	0.85 to 1.15	0.85 to 1.15

Heat Treatment for Group I Plates

4. (*a*) All plates shall be treated to produce grain refinement, either by annealing, or normalizing and tempering, or heating uniformly for hot forming followed by tempering. Heat treatment involving quenching in a liquid medium is not permitted. If the required treatment is to be obtained in conjunction with the hot forming operation, the temperature to which the plates are heated for hot forming shall be equivalent to and shall not significantly exceed the annealing or the normalizing temperature. If the treatment of plates is not specified to be done at the plate manufacturer's plant, the testing shall be carried out in accordance with Paragraph (*b*).

(*b*) When a fabricator is equipped and elects to perform the required annealing or normalizing and tempering or fabricates by hot forming followed by a

tempering treatment as provided in Paragraph (*a*), the plates shall be accepted on the basis of mill tests made on specimens heat treated in accordance with the purchaser's order requirements. If the heat treatment temperatures are not indicated on the purchase order, the plate manufacturer shall heat treat the specimens under conditions he considers appropriate for grain refinement, and to meet the test requirements. The plate manufacturer shall inform the fabricator of the procedure followed in treating the specimens at the mill.

(*c*) The purchaser shall indicate in his orders to the plate manufacturer whether the rolling mill or the fabricator shall perform the required treatment of the plates.

(*d*) When the plates are to be annealed or normalized and tempered at the plate manufacturer's plant, the mechanical properties shall be determined on specimens simultaneously treated with the plates.

Heat Treatment for Group II Plates

5. All plates shall be annealed, or normalized and tempered by the plate manufacturer. The tempering temperature shall not be less than 1200 F. Heat treatment involving quenching in a liquid medium is not permitted.

Chemical Composition

6. The steel shall conform to the requirements as to chemical composition prescribed in Table I.

Ladle Analysis

7. An analysis of each heat of steel shall be made by the manufacturer to determine the percentages of the elements prescribed in Table I. This analysis shall be made from a test ingot taken during the pouring of the heat. The chemical composition thus determined shall be reported to the purchaser or his representative, and shall conform to the requirements prescribed in Table I.

Check Analysis

8. An analysis may be made by the purchaser from a broken tension test specimen representing each plate as rolled (Note). The chemical composition thus determined shall conform to the requirements specified in Table I.

TABLE II.—TENSILE REQUIREMENTS.

	Group I			Group II	
	Grade A	Grade B	Grade C	Grade D	Grade E
Tensile strength, psi	65 000 to 82 000	60 000 to 82 000	60 000 to 85 000	60 000 to 85 000	60 000 to 85 000
Yield point, min, psi[a]	40 000	35 000	35 000	...	...
Yield strength, min, psi[a]	...	...	...	30 000	30 000
Elongation in 8 in., min, per cent[b]	20	21	21	...	...
Elongation in 2 in., min, per cent					
Flange	23	23	23	...	...
Firebox[c]	24	24	24	20	20
Reduction of area, min, per cent	...	...	...	50	50

[a] See Section 9 (*c*).
[b] See Section 9 (*d*), (*e*), and (*f*).
[c] See Section 9 (*a*).

NOTE.—The term "plate as-rolled" used here and in Section 12 refers to the unit plate rolled from a slab or directly from an ingot in its relation to the location and number of specimens, not to its condition.

Tensile Properties

9. (*a*) The material as represented by tension tests shall conform to the requirements as to the tensile properties prescribed in Table II.

(*b*) Tensile strength only need be determined on the tension test specimen taken from the top of plates of firebox quality, and it shall not exceed 85,000 psi for grades A and B; 88,000 psi for grades C, D, and E.

(*c*) For plates in group I, the yield point shall be determined by the drop of the beam or halt in the gage of the testing machine, or by the use of dividers or other approved method in accordance with the Methods and Definitions for Mechanical Testing of Steel Products (ASTM Designation: A 370). For plates in group II, the yield strength shall be determined by the 0.2 per cent offset method or by determining the stress at a total extension under load of 0.5 per cent.

(*d*) For material under $\frac{5}{16}$ in. in thickness, a deduction from the percentage elongation in 8 in. specified in Table II of 1.25 per cent shall be made for each decrease of $\frac{1}{32}$ in. of the specified thickness below $\frac{5}{16}$ in.

(*e*) For plates over $\frac{1}{4}$ to $\frac{5}{16}$ in. in thickness, if the percentage of elongation of an 8-in. gage length test specimen falls not more than 3 per cent below the amount prescribed in Table II, the elongation shall be considered satisfactory provided the percentage of elongation in 2 in. across the break is not less than 25 per cent.

NOTE.—A characteristic of certain types of alloy steels is a local disproportionate increase in the degree of necking down or contraction of the specimens under tension test, resulting in a decrease in the percentage of elongation as the gage length is increased. The effect is not so pronounced in the thicker plates.

(*f*) For material over $\frac{3}{4}$ in. in thickness, a deduction from the percentage of elongation in 8 in. specified in Table II of 0.5 per cent shall be made for each increase of $\frac{1}{8}$ in. of the specified thickness above $\frac{3}{4}$ in. This deduction shall not exceed 3 per cent.

(*g*) For material over $3\frac{1}{2}$ in. in thickness, a deduction from the percentage of elongation in 2 in. specified in Table II of 0.5 per cent shall be made for each increase of $\frac{1}{2}$ in. of the specified thickness above $3\frac{1}{2}$ in. This deduction shall not exceed 3 per cent.

Bending Properties

10. The bend test specimen shall stand being bent cold (room temperature) through 180 deg without cracking on the outside of the bent portion to an inside diameter which shall have the relation to the thickness of the specimen prescribed in Table III. When the test is made on a specimen reduced in thickness, the rolled surface shall be on the outer curve of the bend.

Test Specimens

11. (*a*) All test specimens shall be prepared from the material in its heat treated condition or from full thickness samples similarly and simultaneously treated, except as permitted in Section 4 for plates in group I.

TABLE III.—BEND DIAMETERS.

Material Thickness, in.	Ratio of Bend Diameter to Specimen Thickness	
	Group I	Group II
1 and under	$1\frac{1}{2}$	2
Over 1 to 2, incl.	2	$2\frac{1}{2}$
Over 2 to 4, incl.	2	3
Over 4 to 6, incl.	$2\frac{1}{2}$	$3\frac{1}{2}$

(*b*) When so specified on the purchase order with the mill for plates in group I, test specimens representing the plates shall be stress-relieved by gradually and uniformly heating them to a temperature of 1200 F minimum (or a temperature range otherwise agreed upon between the manufacturer and the fabricator) holding at temperature for at least 1 hr per in. of thickness and cooling in still atmosphere to a temperature not exceeding 600 F.

(*c*) Tension test specimens for group II plates for thicknesses under $\frac{3}{4}$ in. shall conform to the dimensions shown in Fig. 5 (or alternatively Fig. 4) of Methods A 370, except if desired, they may have straight or parallel edges (dimensions: plate thickness by $\frac{3}{4} \pm 0.015$ in. width by 8 in. minimum length). On plates $\frac{3}{4}$ in. and over in thickness, the group II tension test specimens shall be machined to the form and dimensions of Fig. 6 of Methods A 370.

Number of Tests

12. Two tension tests and one bend test shall be made from each fire-box steel plate as-rolled. One tension test and one bend test shall be made from each flange steel plate as-rolled.

NOTE.—The term "plate as-rolled" used here refers to the unit plate rolled from a slab or directly from an ingot in its relation to the location and number of specimens, not to its condition.

Finish

13. When specified, the plates after annealing or normalizing and tempering, shall be chemically descaled or descaled by grit or sand blasting.

Marking

14. As provided in ASTM Specification A 20, each plate shall be legibly stamped or stenciled, depending on ordered thickness, with the letter A, B, C, D, or E for the applicable grade in addition to the regular markings.

SPECIFICATION FOR CAST NODULAR IRON FOR PRESSURE CONTAINING PARTS FOR USE AT ELEVATED TEMPERATURES

SA-395

(IDENTICAL WITH ASTM SPECIFICATION A 395-61)

Scope

1. These specifications cover nodular iron castings for pressure containing parts for use at elevated temperatures.

Manufacture

2. (*a*) The melting method and metal treatment shall be optional with the foundry.

(*b*) All castings shall be given a ferritizing anneal. (See Note 1).

Tensile Properties

3. (*a*) The metal represented by the appropriate test specimen required by these specifications shall conform to the following minimum tensile requirements:

Tensile strength, min, psi	60 000
Yield strength, min, psi	45 000
Elongation in 2 in., min, per cent	15

(*b*) The yield strength shall be determined by the 0.2 per cent offset method in accordance with the Methods of Tension Testing of Metallic Materials (ASTM Designation: E 8).

TABLE I.—SIZE OF TEST COUPON.

Thickness of Controlling Section, in.	Size of Coupon, in.
1 and under	1
Over 1 to 3, incl	3
Over 3	Larger test coupons may be used by agreement between the manufacturer and the purchaser.

Test Coupons

4. (*a*) The purchaser shall designate the controlling section, but the manufacturer and the purchaser shall agree before the casting is made on the size of test coupon which will best represent the quality of the material in the casting. The size of test coupon shall be as prescribed in Table I.

(*b*) Separately cast test coupons from which the tension test specimens are to be machined shall be cast to size and shape shown in Fig. 1. They shall be cast in open molds made of suitable core sand having minimum wall thicknesses of 1½ in. for the 1-in. size and 3 in. for the 3-in. size. The coupons shall be left in the mold until they have cooled to black color (approximately 900 F, or less). The keel block as shown in Fig. 2 may be substituted for the 1-in. "Y" block shown in Fig. 1.

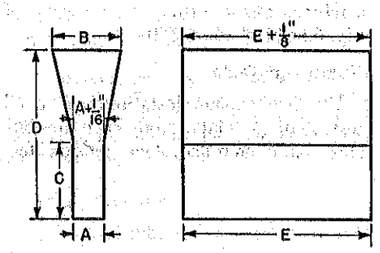

Dimensions, in.	"Y"-block size	
	1-in.	3-in.
A	1	3
B	2⅛	5
C	1½	2⅝
D	5⅜	5⅝
E	6	6

FIG. 1.—"Y" Blocks for Test Coupons.

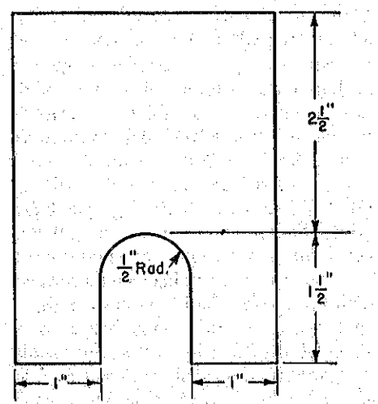

NOTE.—The length of the keel block shall be 6 in.

FIG. 2.—Keel Block for Test Coupons.

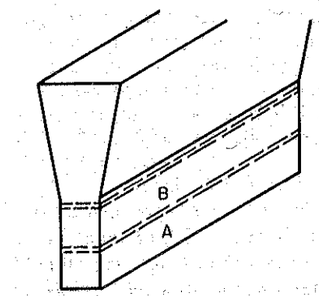

(*a*) *1-in. "Y" Block.*—Two blanks for 0.50-in. diameter tension test specimens or transverse tests.

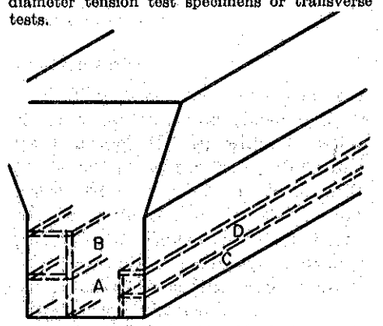

(*b*) *3-in. "Y" Block.*—Two blanks for 0.50-in. diameter tension test specimens and two blanks for transverse test.

FIG. 3.—Sectioning Procedure for "Y" Blocks.

(*d*) The test coupons as shown (or coupons required in Section 4 (*f*)) shall be cast immediately after the castings are cast and shall represent each quantity of metal, or ladle, treated with the appropriate nodularizing alloy.

(*e*) Each test coupon shall be identified by appropriate marking, with the casting it represents.

(*f*) A sufficient number of coupons shall be cast to provide for each ferritizing anneal and they shall be heat-treated with the castings they represent.

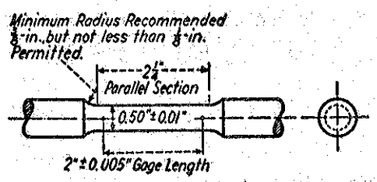

NOTE.—The gage length and fillets shall be as shown, but the ends may be of any shape to fit the holders of the testing machine in such a way that the load shall be axial. The reduced section shall have a gradual taper from the ends toward the center, with the ends 0.003 to 0.005 in. larger in diameter than the center.

FIG. 4.—Standard Round Tension Test Specimen with 2-in. Gage Length.

Tension Test Specimens

5. (*a*) The standard round tension test specimen with a 2-in. gage length as shown in Fig. 4 shall be used.

Retests

6. One tension test shall be made from sections cut as shown in Fig. 3. If any tension test specimen shows obvious defects, another may be cut from the same coupon, or from another coupon representing the same ladle of metal, and the same anneal charge may be tested. If an apparently sound test specimen fails to conform to these specifications, the castings may be reannealed and two retests made. If either retest specimen fails to conform to these specifications, the castings they represent shall be rejected.

Chemical Composition

7. (*a*) The chemical composition of metal shall be within the following limits for the elements shown (see Note 2).

Total carbon, min, per cent	3.0
Silicon, max, per cent	2.75
Phosphorus, max, per cent	0.08

(*b*) The chemical analysis for total carbon shall be made on chilled cast pencil type specimens or from thin wafers approximately $\frac{1}{32}$-in. thick cut from test coupons. Drillings are not acceptable because of the probable loss of graphite (see Note 3).

TABLE II.—MINIMUM THICKNESS OF REPAIRED SECTIONS.

Iron Pipe Size Plug, in.	Minimum Thickness Repaired Section, in.
⅛	11/32
¼	7/16
⅜	19/32
½	21/32
¾	3/4
1	13/16
1¼	7/8
1½	15/16
2	1

(*c*) The silicon and phosphorus shall be determined from drillings or millings taken from test specimens or from test coupons, care being taken to discard the first ⅛ in. of depth.

Anneal

8. (*a*) The annealing cycle shall be chosen by the manufacturer to produce a substantially ferritic matrix structure.

Workmanship and Finish

9. (*a*) The castings shall conform substantially to the dimensions on the drawings furnished by the purchaser, or if no drawing has been provided, to the dimensions predicated by the pattern supplied by the purchaser. Surfaces of the castings shall be free of adhering sand and shall be reasonably smooth. Runners, risers, fins, and other extraneous metal shall be removed. In other respects, the castings shall conform to whatever points may be specially agreed upon between the manufacturer and the purchaser.

(*b*) Castings made to this specification, which leak on hydrostatic test, may be repaired by plugging, providing the following requirements are met:

TABLE III.—MINIMUM RADIUS OF REPAIRED SECTIONS.

Iron Pipe Size Plug, in.	Minimum Radius of Cylinder or Cone, in.
⅛	9/16
¼	11/16
⅜	11/16
½	1¼
¾	2
1	2½
1¼	4
1½	5¼
2	8⅛

(*1*) No welding or brazing is permitted.

(*2*) The diameter of the plug shall not exceed the diameter of a standard 2 in. Iron Pipe Size pipe plug.

(*3*) The plugs, where practical, shall conform in all dimensions to the standard Iron Pipe Size pipe plugs. In addition, they shall have full thread engagement corresponding to the thickness of the repaired section. Where a tapered plug is impractical because of the excess wall thickness in terms of plug diameter and coincident thread engagement, other types of plugs may be used provided both full engagement and effective sealing against pressure are obtained. Where possible the ends of the plugs should be ground smooth after installation to conform to the inside and outside contours of the wall of the pressure vessel or pressure part.

(*4*) The material from which the plug is manufactured shall conform in all respects to the materials specifications which applies to the pressure vessel or pressure part.

(*5*) The area adjacent to the drilled hole shall, by radiographic examination, equal the requirements of class 3 of the Industrial Radiographic Standards for Steel Castings (ASTM Designation E 71).

(*6*) The thickness of any repaired section in relation to the size of plug used shall not be less than that given in Table II.

(*7*) The minimum radius of repaired sections of cylinders or cones in relation to the size of plug used shall not be less than that given in Table III.

(*8*) A repaired area may consist of a maximum of three plugs with a spacing

TABLE IV.—MINIMUM LIGAMENT BETWEEN PLUGS.
(Based on an Efficiency of 80 per cent)

Nominal Plug Diameter, in.	Minimum Ligament Between Plugs, in.			
	1/8, 1/4, 3/8	1/2, 3/4	1, 1 1/4	1 1/2, 2
1/8, 1/4, 3/8	2 5/8	4 1/8	6 5/8	9 1/2
1/2, 3/4	4 1/8	4 1/8	6 5/8	9 1/2
1, 1 1/4	6 5/8	6 5/8	6 5/8	9 1/2
1 1/2, 2	9 1/2	9 1/2	9 1/2	9 1/2

Example.—Assume three plugs are required for repair, one 1/8 in., one 3/8 in., and one 1 1/2 in The minimum distance permitted is as follows:
Ligament distance between 1/8 and 3/8-in. plugs = 2 5/8 in.
Ligament distance between 1/8 and 1 1/2-in. plugs = 9 1/2 in.
Ligament distance between 3/8 and 1 1/2-in. plugs = 9 1/2 in.

such that the ligaments between adjacent plugs shall not be less than listed in Table IV. Other defective areas may also be repaired by plugging provided the minimum ligament between plugs in adjacent areas is not less than twice the distance from the nearest plug, the values for which are listed in Table IV.

(*c*) Surface imperfections may be repaired by plugging provided the depth of the plug is not greater than 20 per cent of the thickness of the casting section and the diameter of the plug is not greater than its length. The plug need not be threaded. Items (*1*) and (*4*) of Section 9 (*b*) shall also be satisfied.

Inspection

10. (*a*) The inspector representing the purchaser shall have free entry at all times while work on the contract of the purchaser is being performed to all parts of the manufacturer's works which concern the manufacture of the material ordered. The manufacturer shall afford the inspector, without charge, all reasonable facilities to satisfy him that the material is being furnished in accordance with these specifications. Unless otherwise specified, all tests and inspection shall be made at the place of manufacture prior to shipment, and shall be so conducted as not to interfere unnecessarily with the operation of the works.

Certification

11. Upon the request of the purchaser, the manufacturer shall be prepared to certify that his product conforms to the requirement of these specifications.

EXPLANATORY NOTES

NOTE 1.—A ferritizing anneal may be defined as one which consists of:
(*1*) Heating the piece into the austenitic range to graphitize any free cementite that may be present,
(*2*) Then to cool to a lower temperature, usually below the critical, and
(*3*) Holding at this temperature a sufficient time so that the pearlitic matrix will change to ferrite.
The temperature and time required is dependent on the chemical analysis and section size of the casting.

NOTE 2.—Silicon contents above 2.75 per cent, or phosphorus contents above 0.08 per cent, have a tendency to lower the impact resistance of the material. If the carbon content is below 3.00 per cent, excess cementite may form during cooling and if this is not removed during the annealing cycle, the impact resistance of the material may be lowered.

NOTE 3.—Deleterious elements are not considered in these specifications because the physical properties that are specified automatically limit the content of these elements.

SPECIFICATION FOR CHROMIUM-COPPER-NICKEL-ALUMINUM ALLOY STEEL PLATES FOR PRESSURE VESSELS

SA-410

(IDENTICAL WITH ASTM SPECIFICATION A 410-57T)

Scope

1. This specification covers one grade of chromium-copper-nickel-aluminum alloy steel plates of firebox quality in an intermediate tensile strength range (Note). This material is intended for fusion welding. Welding technique is of fundamental importance, and it is presupposed that the welding procedure will be in accordance with methods approved for this class of material.

NOTE.—When this material is intended for low-temperature use, the requirements of the Specification for Steel Plates for Pressure Vessels for Service at Low Temperatures (ASTM Designation: A 300) shall also apply.

General Conditions for Delivery

2. Material furnished under this specification shall conform to the applicable requirements of the current edition of the Specifications for General Requirements for Delivery of Rolled Steel Plates of Flange and Firebox Qualities (ASTM Designation: A 20).

Process

3. (*a*) The steel shall be made by either or both of the following processes: open-hearth or electric-furnace.

(*b*) When the plates are intended primarily for low-temperature service it is suggested that the steel be deoxidized in accordance with fine grain practice.

Heat Treatment

4. (*a*) Unless otherwise specified in the order, plates shall be treated to produce grain refinement either by normalizing or heating uniformly for hot forming. If the required treatment is to be obtained in conjunction with the hot forming operation, the temperature to which the plates are heated for hot forming shall be equivalent to and shall not significantly exceed the normalizing temperature. If the treatment of the plates is not specified to be done at the plate manufacturer's plant, the testing shall be carried out in accordance with Paragraph (*b*).

(*b*) When a fabricator is equipped and elects to perform the required normalizing or fabricates by hot forming as provided in Paragraph (*a*), the plates shall be accepted on the basis of mill tests made on specimens heat treated in accordance with the purchaser's order requirements. If the heat treatment temperatures are not indicated on the purchase order, the plate manufacturer shall heat treat the specimens under conditions he considers appropriate for grain refinement, and to meet the test requirements. The plate manufacturer shall inform the fabricator of the procedure followed in treating the specimens at the mill.

(*c*) The purchaser shall indicate in his orders to the plate manufacturer whether the rolling mill or the fabricator shall perform the required treatment of the plates.

(*d*) When the plates are to be normalized at the plate manufacturer's plant, the test pieces prescribed in Paragraph (*e*) may be cut from the plate either before or after normalizing. If cut from the plate before normalizing, the test pieces shall be normalized simultaneously with the parent plate.

(*e*) Test pieces for heat treatment shall consist of the full thickness of the plate with the two other dimensions at least three times the thickness, but in no case less than 3 in.

TABLE I.—CHEMICAL REQUIREMENTS.

Carbon, max, per cent	0.12
Manganese, per cent:	
Ladle analysis	0.55 to 1.00
Check analysis	0.50 to 1.05
Phosphorus, max, per cent	0.040
Sulfur, max, per cent	0.040
Chromium, per cent:	
Ladle analysis	0.50 to 0.95
Check analysis	0.44 to 1.01
Nickel, per cent:	
Ladle analysis	0.50 to 0.95
Check analysis	0.47 to 0.98
Copper, per cent	0.40 to 0.75
Silicon, per cent:	
Ladle analysis	0.10 to 0.35
Check analysis	0.08 to 0.37
Aluminum, per cent	0.04 to 0.30

Chemical Composition

5. The steel shall conform to the requirements as to chemical composition prescribed in Table I.

TABLE II.—TENSILE REQUIREMENTS.

Tensile strength, min, psi	60 000
Yield point, min, psi	30 000
Elongation in 8 in., min, per cent	21.0[a]
Elongation in 2 in., min, per cent	24.0[b]

[a] See Section 6 (*d*), (*e*), and (*f*).
[b] See Section 6 (*g*).

Tensile Properties

6. (*a*) The material as represented by the tension test specimens shall conform to the tensile properties prescribed in Table II.

(*b*) Tensile strength only need be determined on the tension test specimen taken from the top of the plates.

(*c*) The yield point shall be determined by the drop of the beam or halt in the gage of the testing machine.

(*d*) For material under $\frac{5}{16}$ in. in thickness, a deduction from the percentage of elongation in 8 in. as prescribed in Table II of 1.25 per cent shall be made for each decrease of $\frac{1}{32}$ in. of the specified thickness below $\frac{5}{16}$ in.

(*e*) For plates over $\frac{1}{4}$ to $\frac{3}{4}$ in., incl, if the percentage of elongation of an 8-in. gage length specimen falls not more than 3 per cent below the amount prescribed in Table II, the elongation shall be considered satisfactory provided the percentage of elongation in 2 in. across the break is not less than 25 per cent.

NOTE.—A characteristic of certain types of alloy steels is a local disproportionate increase in the degree of necking down or contraction of the specimens under tension test, resulting in a decrease in the percentage of elongation as the gage length is increased. The effect is not so pronounced in thicker plates.

(*f*) For material over $\frac{3}{4}$ in. in thickness a deduction from the percentage of elongation in 8 in. prescribed in Table II of 0.5 per cent shall be made for each increase of $\frac{1}{8}$ in. of the specified thickness above $\frac{3}{4}$ in. This deduction shall not exceed 3 per cent.

(*g*) For material over $3\frac{1}{2}$ in. in thickness, a deduction from the percentage of elongation in 2 in. prescribed in Table II of 0.5 per cent shall be made for each increase of $\frac{1}{2}$ in. of the specified thickness above $3\frac{1}{2}$ in. This deduction shall not exceed 3 per cent.

Bending Properties

7. The bend test specimen shall withstand being bent at room temperature through 180 deg without cracking on the outside of the bent portion to an inside diameter which shall have the relation to the thickness of the specimen as prescribed in Table III. When the test is made on a specimen reduced in thickness, the rolled surface shall be on the outer curve of the bend.

TABLE III.—BEND DIAMETER.

Thickness of Material, in.	Ratio of Bend Diameter to Thickness of Specimen
1 and under	2
Over 1 to $1\frac{1}{2}$, incl	$2\frac{1}{2}$
Over $1\frac{1}{2}$ to 3, incl	3
Over 3	$3\frac{1}{2}$

Test Specimens

8. (*a*) For plates of all thicknesses all test specimens shall be prepared from full-thickness test pieces which have been normalized as prescribed in Section 4.

(*b*) When the completed pressure vessel is to be stress relieved, the order shall specify that the test specimens are to be stress-relieved. The stress-relieving temperature, unless otherwise specified in the order, shall be 1100 to 1200 F. The procedure for stress relieving shall consist of reheating the test pieces to the prescribed temperature, holding at that temperature for 1 hr per in. of thickness and furnace cooling to a temperature not exceeding 600 F. The plate manufacturer shall furnish details of the stress-relieving operation to the purchaser for guidance in stress relieving the completed vessel.

Number of Tests

9. Two tension tests, one bend test and one homogeneity test, shall be made from each plate as rolled.

NOTE.—The term "plate as rolled" refers to the unit plate from a slab or rolled directly from an ingot in its relation to the location and number of specimens, not to its condition. If the plate is sheared or otherwise cut into smaller sizes after rolling, the tests made from the original plate shall govern.

Marking

10. As provided in ASTM Specification A 20 each plate shall be legibly stamped or stenciled depending on ordered thickness with the letters CCN in addition to the regular markings.

Certification

11. When agreed upon in writing between the manufacturer and the purchaser, a certification that the material conforms to the requirements of this specification shall be the basis for acceptance of the material. Otherwise, the manufacturer shall report to the purchaser or his representatives the heat treatment applied to the material and to the test pieces as well as the chemical analyses and the mechanical tests made in accordance with this specification.

SPECIFICATION FOR CARBON STEEL SHEETS OF FLANGE AND FIREBOX QUALITIES

SA-414

(IDENTICAL WITH ASTM SPECIFICATION A 414-58T)

Scope

1. (*a*) These specifications cover three grades of hot-rolled carbon steel sheets of flange and firebox qualities of low and intermediate tensile strengths for pressure vessels.

(*b*) The maximum thickness to be ordered under these specifications is 0.2299 in.; the minimum thickness, 0.0568 in. This material is furnished in cut lengths and to decimal thickness only.

(*c*) These sheets are intended for welding and brazing. Flat hot-rolled carbon steel may be spot welded in the hot-rolled condition, but for the best results the oxide or scale should be removed before welding. As carbon increases above 0.25 per cent, fusion welding becomes increasingly difficult. As carbon increases above 0.15 per cent spot welding becomes increasingly difficult.

Basis of Purchase

2. (*a*) The purchaser shall specify the desired grade in accordance with Table II.

(*b*) Orders for material under these specifications shall include the following information, as required to adequately describe the desired material.

(*1*) Name of material (steel, flat hot-rolled carbon sheets of flange or firebox quality),

(*2*) Dimensions, including thickness, width and lengths,

(*3*) Type of edges (mill or cut),

(*4*) Grade, ASTM specification number and date of issue, and

(*5*) Copper steel (when required).

NOTE 1.—A typical ordering description is as follows: "Steel, flat hot-rolled carbon sheets of flange quality, 0.100 in. by 36 in. (mill edge or cut edge) by 96 in., grade A per ASTM A 414 - 58 T."

Process

3. The steel shall be made by the open hearth, basic oxygen, or electric furnace process.

Chemical Composition

4. The steel shall conform to the requirements as to chemical composition prescribed in Table I.

Ladle Analysis

5. A chemical analysis of each heat of steel shall be made by the manufacturer to determine the percentages of carbon, manganese, phosphorus, sulfur, and copper when copper steel is specified. This analysis shall be made from a test ingot taken during the pouring of the heat. The chemical composition thus determined shall be reported to the purchaser or his representative.

Check Analysis

6. A chemical analysis may be made by the purchaser from a broken tension test specimen representing the product of each slab as rolled. The chemical composition thus determined shall conform to the requirements specified in Table I.

Tensile Properties

7. (*a*) The material as represented by the tension test specimens shall conform to the requirements as to tensile properties prescribed in Table II.

(*b*) On the tension test specimen taken from the back end of each slab as rolled of firebox sheets tensile strength only is

TABLE I.—CHEMICAL REQUIREMENTS.

	Flange			Firebox		
	Grade A	Grade B	Grade C	Grade A	Grade B	Grade C
Carbon, max, per cent	0.18	0.26	0.31	0.18	0.23	0.28
Manganese, max, per cent	0.80	0.80	0.80	0.80	0.80	0.80
Phosphorus, max, per cent:						
Acid	0.05	0.05	0.05	0.04	0.04	0.04
Basic	0.04	0.04	0.04	0.035	0.035	0.035
Sulfur, max, per cent	0.05	0.05	0.05	0.04	0.04	0.04
Copper, when copper steel is specified, min, per cent:						
Ladle analysis	0.20	0.20	0.20	0.20	0.20	0.20
Check analysis	0.18	0.18	0.18	0.18	0.18	0.18

to be determined, and it shall not exceed the following:

Grade	Maximum Tensile Strength, psi, for Firebox Sheets of Thicknesses Given in Inches	
	0.0972 and over	0.0971 and under
A	60 000	65 000
B	65 000	70 000
C	70 000	75 000

(*c*) The yield point shall be determined by the drop of the beam or halt in the gage of the testing machine or by the dividers method.

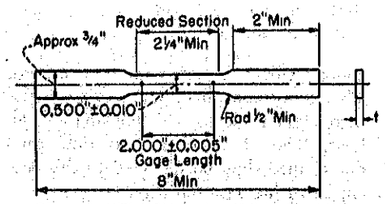

NOTE 1.—The dimension "t" is the thickness of the test specimen as provided for in the applicable material specifications.

NOTE 2.—The reduced section shall be parallel within 0.005 in. and may have a gradual taper in width from the ends toward the center, with the ends not more than 0.005 in. wider than the center.

NOTE 3.—The ends of the specimen shall be symmetrical with the center line of the reduced section within 0.05 in.

NOTE 4.—A stepped or double fillet is permissible if all other tolerances are maintained.

FIG. 1.—Standard Rectangular Tension Test Specimen with 2-in. Gage Length.

Bending Properties

8. The bend test specimens shall stand being bent at room temperature through 180 deg around one thickness of the material without cracking on the outside of the bent portion.

Test Specimens

9. (*a*) Test specimens shall be prepared for testing from sheets in their finished condition.

(*b*) Tension test specimens for flange and firebox steels shall be taken at a location approximately midway between the center and edge of the sheet parallel to the longitudinal axis. For flange quality a tension test shall be taken at a point representing approximately the middle of the slab as rolled. For firebox quality a tension test shall be taken at a point representing approximately the middle of the slab as rolled and an additional tension test shall be taken from approximately the back end of the slab as rolled. Bend test specimens shall be taken from the center of the back end of the slab as rolled at right angles to the longitudinal axis. See Fig. 3.

(*c*) Tension and bend test specimens shall be the full thickness of the sheets and the tension test specimen shall be machined to the form and dimensions shown in Fig. 1 or Fig. 2. Fig. 1 is recommended for all sheet thicknesses.

(*d*) The edges of the bend test specimens shall be practically free of burrs, filing or machining to remove burrs being permissible.

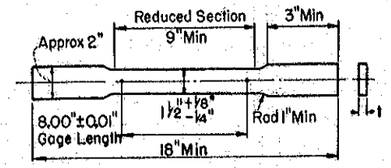

NOTE 1.—When necessary, it is permissible to use a narrower specimen but in such a case the reduced portion shall be not less than 1 in. in width.

NOTE 2.—The dimension "t" is the thickness of the test specimen as provided for in the applicable material specifications.

NOTE 3.—The reduced section shall be parallel within 0.010 in. and may have a gradual taper in width from the ends toward the center with the ends not more than 0.010 in. wider than the center.

NOTE 4.—The ends of the specimen shall be symmetrical with the center line of the reduced section within 0.10 in.

FIG. 2.—Standard Rectangular Tension Test Specimen with 8-in. Gage Length.

Number of Tests

10. (*a*) Two tension tests and one bend test shall be made from the product of each slab of firebox steel as rolled. One tension test and one bend test shall be made from the product of each slab of flange steel as rolled.

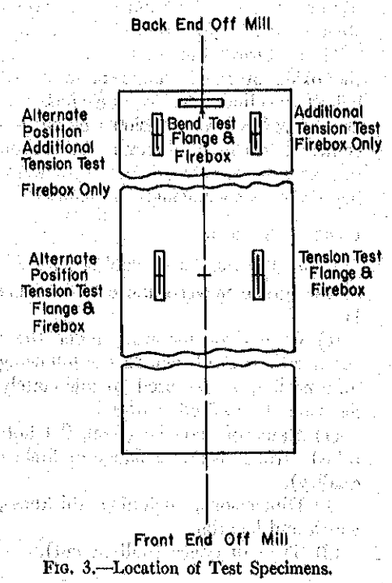

FIG. 3.—Location of Test Specimens.

TABLE II.—TENSILE REQUIREMENTS.

	Flange			Firebox		
	Grade A	Grade B	Grade C	Grade A	Grade B	Grade C
Tensile strength, min, psi	45 000	50 000	55 000	45 000[a]	50 000[a]	55 000[a]
Yield point, min, psi	24 000	27 000	30 000	24 000	27 000	30 000
Elongation in 2 in. (Fig. 1), min, per cent:						
0.2299 to 0.1450 in., incl, in thickness	27.5	25.5	23.5	28.5	26.5	24.5
0.1449 to 0.0890 in., incl, in thickness	25.5	23.5	21.5	26.5	24.5	22.5
0.0889 to 0.0568 in., incl, in thickness	24.0	22.0	20.0	25.0	23.0	21.0
Elongation in 8 in. (Fig. 2), min, per cent:						
0.2299 to 0.1450 in., incl, in thickness	21.5	19.5	17.5	22.5	20.5	18.5
0.1449 to 0.0890 in., incl, in thickness	19.5	17.5	15.5	20.5	18.5	16.5

[a] See Section 7(*b*).

TABLE III.—PERMISSIBLE VARIATIONS IN THICKNESS.[a]

Specified Width, in.	Permissible Variations in Thickness for Width and Thickness Given, plus or minus, in.					
	0.2299 to 0.1875, incl	0.1874 to 0.1420, incl	0.1419 to 0.0972, incl	0.0971 to 0.0822, incl	0.0821 to 0.0710, incl	0.0709 to 0.0568, incl
To 15, incl	0.008	0.007	0.007	0.006	0.006	0.006
Over 15 to 20, incl	0.008	0.008	0.008	0.007	0.007	0.006
Over 20 to 32, incl	0.009	0.009	0.008	0.007	0.007	0.006
Over 32 to 40, incl	0.009	0.009	0.009	0.008	0.007	0.006
Over 40 to 48, incl	0.010	0.010	0.010	0.008	0.007	0.006
Over 48 to 60, incl	...	0.010	0.010	0.008	0.007	0.007
Over 60 to 70, incl	...	0.011	0.011	0.009	0.008	0.007
Over 70 to 80, incl	...	0.012	0.012	0.009	0.008	...
Over 80 to 90, incl	...	0.012	0.012	0.010	...	...
Over 90	...	0.012	0.012	...	...	...

[a] Thickness is measured at any point on the sheet not less than 3/8 in. from a cut edge and not less than 3/4 in. from a mill edge.

(*b*) If any test specimen shows defective machining or develops flaws, it may be discarded and another specimen from the same slab substituted.

(*c*) If the percentage of elongation of any tension test specimen is less than that specified in Table II and any part of the fracture is outside the middle third of the gage length, as indicated by scribe scratches marked on the specimen before testing, a retest shall be allowed.

(*d*) Cracks developing at the edge of the bend test specimen or coarse grain developing at the line of bend shall be disregarded.

Permissible Variations of Finished Material

11. (*a*) *Thickness.*—Sheets shall not vary from the thickness ordered by more than the amount shown in Table III.

(*b*) *Width.*—Sheets shall not vary from the widths ordered by more than the amount shown in Table IV.

(*c*) *Length.*—Sheets shall not vary from the lengths ordered by more than the amounts shown in Table V.

Finish

12. The material shall be free from injurious defects.

Marking

13. The name or brand of the manufacturer, the manufacturer's test identification number, class, and lowest tensile strength specified in Table II shall be legibly and durably marked on each finished sheet in two places not less than 12 in. from the edges. Sheets, the maximum lengthwise or crosswise, or both, dimensions of which do not exceed 48 in., shall be legibly and durably marked in one place approximately midway between the center and a side edge. The manufacturer's test identification number shall be legibly and durably marked on each test specimen. Steel die marking of sheets is prohibited.

Inspection

14. The inspector representing the purchaser shall have free entry at all times while work on the contract of the purchaser is being performed, to all parts of the manufacturer's works that concern the manufacture of the material ordered. The manufacturer shall afford the inspector all reasonable facilities to satisfy him that the material is being furnished in accordance with these specifications. All tests (except check analysis) and inspection shall be made at the place of manufacture, prior to shipment, unless otherwise specified, and shall be made in conjunction with, and to the extent of, the producers regular inspection operations.

TABLE IV.—PERMISSIBLE VARIATIONS IN WIDTH.

Specified Width, in.	Permissible Variations Over Specified Width, in.[a]
Cut Edge Sheets	
To 20 incl	1/8
Over 20 to 30, incl	3/16
Over 30 to 50, incl	1/4
Over 50 to 80, incl	5/16
Over 80	3/8
Mill Edge Sheets	
Over 12 to 14, excl	7/16
Over 14 to 17, excl	1/2
Over 17 to 19, excl	9/16
Over 19 to 21, excl	5/8
Over 21 to 24, excl	11/16
Over 24 to 26, excl	13/16
Over 26 to 28, excl	15/16
Over 28 to 35, excl	1 1/8
Over 35 to 50, excl	1 1/4
Over 50 to 60, excl	1 1/2
Over 60 to 65, excl	1 5/8
Over 65 to 70, excl	1 3/4
Over 70 to 80, excl	1 7/8
80 and Over	2

[a] No permissible variations under.

Rejection

15. Material that shows injurious defects subsequent to its acceptance at the manufacturer's works will be rejected, and the manufacturer shall be notified.

TABLE V.—PERMISSIBLE VARIATIONS IN LENGTH.

Specified Length, in.	Permissible Variations Over Specified Length, in.[a]
To 15, incl	1/8
Over 15 to 30, incl	1/4
Over 30 to 60, incl	1/2
Over 60 to 96, incl	3/4
Over 96 to 120, incl	1
Over 120 to 156, incl	1 1/4
Over 156 to 192, incl	1 1/2
Over 192 to 240, incl	1 3/4
Over 240	2

[a] No permissible variations under.

SPECIFICATION FOR SEAMLESS AND ELECTRIC WELDED LOW ALLOY STEEL TUBES

SA-423

(IDENTICAL WITH ASTM SPECIFICATION A 423-61T EXCEPT THAT GRADE 2 HAS BEEN DELETED AND EDITORIAL CORRECTIONS HAVE BEEN MADE)

Scope

1. (*a*) This specification covers seamless and electric resistance welded low alloy steel tubes for pressure containing parts such as economizers or other applications where corrosion resistance is important.

(*b*) This specification covers tubes ½ to 5 in., inclusive, in outside diameter and 0.035 to 0.500 in., inclusive, in minimum wall thickness.

(*c*) The purchaser shall specify in the order the outside diameter and minimum wall thickness. The inside diameter shall not be specified.

General Requirements

2. Material furnished under this specification shall conform to the applicable requirements of the current edition of the Specification for General Requirements for Carbon, Ferritic Alloy, and Austenitic Alloy Steel Tubes (ASTM Designation: A 450), unless otherwise provided herein.

Process

3. The steel shall be made by either or both of the following processes: open hearth or electric furnace.

Manufacture

4. Tubes made by the seamless process may be hot-finished or cold-drawn.

Heat Treatment

5. All tubes shall be normalized or given such heat treatment as may be necessary to conform to the requirements of this specification.

Surface Condition

6. If pickling or shot blasting, or both, are required, this shall be specifically stated in the order and shall be done at the purchaser's expense.

Chemical Analysis

7. The steel shall conform to the following requirements as to chemical composition:

	Grade 1
Carbon, max, per cent	0.15
Manganese, max, per cent	0.55
Phosphorus, per cent	0.06 to 0.16
Sulfur, max, per cent	0.060
Silicon, min, per cent	0.10
Copper, per cent	0.20 to 0.60
Chromium, per cent	0.24 to 1.31
Nickel, per cent	0.20 to 0.70

TABLE I.—TENSILE REQUIREMENTS.

Tensile strength, min, psi	60 000
Yield point, min, psi	37 000
Elongation in 2 in., min, per cent	25
For longitudinal strip tests the width of the gage section shall be 1 in. and a deduction for each 1/32 in. decrease in wall thickness below 5/16 in. from the basic minimum elongation of the following percentage	1.25

Ladle Analysis

8. An analysis of each heat shall be made to determine the percentages of the elements specified. The chemical composition thus determined shall be reported to the purchaser or his representative and shall conform to the requirements specified.

Check Analysis

9. (*a*) An analysis of two tubes from each lot of 250 tubes or fraction thereof may be made by the purchaser. The chemical composition thus determined shall conform to the requirements specified.

(*b*) If the analysis of either tube does not conform to the requirements specified, an analysis of two additional tubes of the same lot shall be made, each of which shall conform to the requirements specified.

Tensile Properties

10. The material shall conform to the requirements as to tensile properties prescribed in Table I.

Hardness Requirements

11. The tubes shall have a Brinell hardness number not exceeding 170 or a Rockwell hardness number not exceeding B87.

Mechanical Tests Required

12. (*a*) *Tension Test.*—One tension test shall be made on specimens from two tubes from each lot of 100 finished tubes or fraction thereof.

(*b*) *Flattening Test.*—One flattening test shall be made on specimens from each end of one finished tube, not the one used for the flaring test, from each lot[4] heat treated in a batch-type furnace. For the purpose of calculating the number of tests on tubes heat treated by the continuous process, the number of tubes in a heat-treated lot[4] shall be determined from the size of the tubes as prescribed in Table II.

TABLE II.—NUMBER OF TUBES IN A LOT HEAT-TREATED BY THE CONTINUOUS PROCESS.

Size of Tube	Size of Lot
2 in. and over in outside diameter and 0.200 in. and over in wall thickness	not more than 50 tubes
Less than 2 in. but over 1 in. in outside diameter or over 1 in. in outside diameter and under 0.200 in. in wall thickness	not more than 75 tubes
1 in. or less in outside diameter	not more than 125 tubes

(*c*) *Flaring Test.*—One flaring test shall be made on specimens from each end of one finished tube, not the one used for the flattening test, from each lot[4] heat treated in a batch-type furnace. For the purpose of calculating the number of tests on tubes heat treated by the continuous process, the number of tubes in a heat-treated lot[4] shall be determined from the size of the tubes as prescribed in Table II.

(*d*) *Hardness Test.*—One Brinell or Rockwell hardness determination shall be made on 5 per cent of all tubes.

(*e*) *Hydrostatic Test.*—Each tube shall be subjected to the hydrostatic test.

[4] The term "lot" applies to all tubes of the same nominal size and wall thickness (or schedule) which are produced from the same heat of steel and subjected to the same finished treatment in a continuous furnace; when final heat treatment is in a batch type furnace, the lot shall include only those tubes which are heat treated in the same furnace charge.

Forming Operations

13. Tubes when inserted in the boiler shall stand expanding and beading without showing cracks or flaws.

Finish

14. Finished tubes shall be reasonably straight and have smooth ends free from burrs. They shall be free from injurious defects and shall have a workmanlike finish. Minor defects may be removed by grinding provided the wall thicknesses are not decreased to less than that permitted in Table V of Specification A 450.

Marking

15. In addition to the marking prescribed in Specification A 450, the marking shall include whether hot-finished or cold-drawn.

SPECIFICATION FOR AUSTENITIC STEEL FORGED AND BORED PIPE FOR HIGH-TEMPERATURE SERVICE

SA-430

(IDENTICAL WITH ASTM SPECIFICATION A 430-61T EXCEPT THAT THE REGULAR GRADES HAVE BEEN DELETED)

Scope

1. (*a*) These specifications cover heavy-wall, forged and bored austenitic steel pipe (Note), intended primarily for high-temperature central station service. Pipe ordered under these specifications shall be suitable for bending and other forming operations and for fusion welding. Selection will depend on design, service conditions, mechanical properties and high-temperature characteristics. The "H" grades are specifically intended for high temperature service.

NOTE.—The use of the word "pipe" throughout the several sections of these Specifications is used in the broad sense and intended to mean pipe, headers, or leads.

(*b*) Four grades of austenitic steels are covered. Their compositions are given in Table I. The grade desired shall be specified on the purchase order.

(*c*) Optional supplementary requirements (Paragraphs S1 through S8) are provided. These paragraphs call for additional tests to be made at the expense of the purchaser and when desired shall be so stated in the order, together with the number of such tests required.

Process

2. The steel shall be made by the electric furnace process or any other process approved by the purchaser.

Discard

3. A sufficient discard shall be made from each ingot to secure freedom from injurious defects and undue segregation.

Manufacturing Practice

4. (*a*) Material for forgings shall consist of ingots, or of blooms, slabs, or bars either forged or rolled from an ingot, and cut to the required length by a process that will not produce injurious defects in the forging.

(*b*) The material shall be forged by hammering, pressing, rolling, or extruding, and shall be brought as nearly as practicable to the finished shape and size by hot working. The material shall be adequately worked under a tool of sufficient capacity to refine the structure in the wall of the finished pipe.

Machining

5. (*a*) All forgings shall have both the inner and outer surfaces machined.

(*b*) The pipe shall be machined to a finish not coarser than 250 rms after heat treatment, unless otherwise specified.

Heat Treatment

6. (*a*) All materials shall be furnished in the solution treated condition. The treatment procedure shall consist of heating types FP 321H and FP 347H to a minimum temperature of 1925 F, and types FP 304H and FP 316H to a minimum temperature of 1800 F, and quenching in water or rapidly cooling by other means.

(*b*) If any controlled structural characteristics are required, these shall be so specified as to be a guide to the most suitable heat treatment. If the final heat treatment for the standard grades is at a temperature other than that given in Paragraph (*a*), and is so specified on the order, each tube shall be stenciled with the final heat treatment temperature in degrees Fahrenheit after the suffix "HT". If no final heat treatment is applied, and is so specified on the order, each tube shall be stenciled "HT-O".

Chemical Composition

7. The steel shall conform to the chemical requirements prescribed in Table I.

Ladle Analysis

8. An analysis of each heat of steel shall be made by the steel manufacturer to determine the percentages of the elements specified in Table I. This analysis shall be made from drillings taken not less than ¼ in. beneath the surface of a test ingot obtained during the pouring of the heat. The chemical composition thus determined shall be reported to the purchaser or his representative and shall conform to the requirements specified in Table I.

TABLE I.—CHEMICAL REQUIREMENTS.

Grade	FP 304H	FP 316H	FP 321H	FP 347H
Carbon, per cent	0.04 to 0.10	0.04 to 0.10	0.04 to 0.10	0.04 to 0.10
Manganese, max, per cent	2.00	2.00	2.50	2.00
Phosphorus, max, per cent	0.040	0.040	0.035	0.040
Sulfur, max, per cent	0.030	0.030	0.030	0.030
Silicon, max, per cent	1.00	1.00	0.85	1.00
Nickel, per cent	8.0 to 11.0	10.0 to 14.0	9.0 min	9.0 to 12.0
Chromium, per cent	18.0 to 20.0	16.0 to 18.0	17.0 min	17.0 to 19.0
Molybdenum, per cent	...	2.0 to 3.0	...	...
Titanium, per cent	...	...	[a]	...
Columbium, per cent	...	...	...	[b]

[a] The titanium content shall be not less than four times the carbon content and not more than 0.60 per cent.

[b] The columbium content shall be not less than eight times the carbon content and not more than 1.00 per cent.

Check Analysis

9. (*a*) At the request of the purchaser, a check analysis of each heat or of two pipes from each lot[3] shall be made by the manufacturer. A lot of pipe shall consist of the following:

Nominal Diameter, in.	Number of Lengths of Pipe in Lot
Under 2	400 or fraction thereof
2 to 5, incl.	200 or fraction thereof
6 and over	100 or fraction thereof

(*b*) Samples for chemical analysis, except for spectrochemical analysis, shall be taken in accordance with the Method of Sampling Steel, Cast Iron, Open-Hearth Iron, and Wrought Iron for Determination of Chemical Composition (ASTM Designation: E 59). The results of these analyses shall be reported to the purchaser or his representative, and shall not vary from the requirements specified in Table I by more than the amounts prescribed in Table II.

TABLE II.—PERMISSIBLE VARIATIONS IN CHECK ANALYSIS.

Elements	Limit, or Maximum of Specified Element, per cent	Permissible Variations, Over the Maximum Limit or Under the Minimum Limit, per cent
Carbon	...	0.0
Manganese	...	0.04
Phosphorus	...	0.005
Sulfur	...	0.005
Silicon	...	0.05
Nickel	Over 5.00 to 10.00 incl.	0.10
	Over 10.00 to 20.00 incl.	0.15
Chromium	...	0.20
Molybdenum	...	0.10
Titanium	...	0.0
Columbium	...	0.0

[3] A lot shall consist of the number of lengths specified in Section 9, of the same size and wall thickness from any one heat of steel.

(*c*) If the analysis of any of the tests specified in Sections 8 or 9(*a*) does not conform to the requirements specified, an analysis of each pipe from the same heat or lot may be made, and all pipe conforming to the requirements shall be accepted.

Tensile Properties

10. (*a*) The material shall conform to the requirements as to tensile properties prescribed in Table III at room temperature.

(*b*) The yield point shall be determined by the drop of the beam, by the halt in the gage of the testing machine, by the use of dividers, or by other approved methods. When a definite yield point is not exhibited, the yield strength corresponding to a permanent offset of 0.2 per cent of the gage length of the specimen, or to a total extension of 0.5 per cent of the gage length under load shall be determined.

(*c*) Tests for acceptance shall be made after final heat treatment of the forging.

Bending Properties

11. For pipe 2 in. and under in nominal diameter, a sufficient length of pipe shall stand being bent cold through 90 deg around a cylindrical mandrel which is twelve times the nominal diameter of the pipe, without developing cracks. When ordered for close coiling, the pipe shall stand being bent cold through 180 deg around a cylindrical mandrel, the diameter of which is eight times the nominal diameter of the pipe, without failure.

Flattening Test

12. For pipe over 2 in. in nominal diameter, a section of pipe not less than 2½ in. in length shall be flattened cold between parallel plates until the opposite walls of the pipe meet. No cracks or breaks in the metal shall occur until the distance between the plates is less than that calculated for the value of "*H*" by the following formula. Evidence of burnt material shall not develop during the entire flattening process.

$$H = \frac{(1 + e)t}{e + t/D}$$

where:

H = distance between flattening plates in inches,
t = nominal wall thickness of pipe in inches,
D = actual outside diameter of pipe in inches, and
e = deformation per unit length (constant for a given grade of steel, 0.09 for austenitic steels).

TABLE III.—TENSILE REQUIREMENTS.

	All Grades	
Tensile strength, min, psi	70 000	
Yield point, min, psi	30 000	
	Longitudinal	Transverse
Elongation in 2 in. min, per cent	45	20
Reduction of Area, min, per cent	50	30

Test Specimens and Methods of Testing

13. (*a*) Specimens cut either longitudinally or transversely shall be acceptable for the tension test.

(*b*) The test specimens and the tests required by these specifications shall conform to those described in the Methods and Definitions for the Mechanical Testing of Steel Products (ASTM Designation: A 370).

(*c*) Test specimens for the bend and flattening tests shall consist of sections cut from a pipe. Specimens for flattening tests shall be smooth on the ends and free from burrs, except when made on crop ends.

(*d*) All routine check tests shall be made at room temperature.

Number of Tests

14. (*a*) The tension test specified in Section 10 shall be made on a specimen taken from one end of one length of pipe representing each heat in each heat treatment lot. The bend test specified in Section 11 shall be made on one length of pipe representing each heat in each heat treatment lot.

(*b*) The flattening test specified in Section 12 shall be made on specimens from one end of each length of pipe. Crop ends may be used. Specimens for flatten-

ing tests shall be smooth on the ends and free from burrs except when made on crop ends.

(*c*) If any test specimen shows defective machining or develops flaws, it may be discarded and another specimen substituted.

Retests

15. (*a*) If the results of the tension tests of any pipe do not conform to the requirements specified in Section 10(*a*), the manufacturer may retreat the pipe, but not more than twice, except with the approval of the purchaser on the basis of satisfactory metallurgical evidence that the cause of the failure of the test is curable, and the quality of the material is satisfactory. Retests shall be made in accordance with Section 14. In case of reheat treatment, the purchaser shall be advised that retreatment has been required.

(*b*) If the percentage of elongation of any tension test specimen is less than that specified in Section 10(*a*) and any part of the fracture is more than $\frac{3}{4}$ in. from the center of the gage length, as indicated by the scribe scratches marked on the specimen before testing, a retest shall be allowed.

(*c*) If the results of the tension test of any pipe do not conform to the requirements specified because a flaw develops in the test specimen during testing, a retest shall be allowed if the defect is not caused by ruptures or cracks in the steel.

(*d*) If the results of the bend test do not conform to the requirements specified in Section 11, the manufacturer may retreat the pipe, but not more than twice except with the approval of the purchaser on the basis of satisfactory metallurgical evidence that the cause of the failure of the test is curable, and the quality of the material is satisfactory. Retests shall be made in accordance with Section 14. In case of reheat treatment, the purchaser shall be advised that retreatment has been necessary.

(*e*) If the results of the flattening test of any pipe do not conform to the requirements specified in Section 12, examination to determine the cause of failure shall be made. If the cause for failure can be rectified by retreatment, the manufacturer may retreat the pipe, but not more than twice, and retests shall be made in accordance with Section 14. In case of reheat treatment, the purchaser shall be advised that retreatment has been necessary.

Workmanship

16. The pipe shall conform to the sizes and shapes specified by the purchaser.

Permissible Variations in Dimensions

17. (*a*) *Diameter.*—The inside diameter shall not vary under that specified by more than $\frac{1}{16}$ in. There shall be no variation over the specified inside diameter.

(*b*) *Thickness.*—The wall thickness shall not vary over that specified by more than $\frac{1}{8}$ in. There shall be no variation under the specified wall thickness.

Lengths

18. Pipe lengths shall not vary over that specified by more than $\frac{1}{8}$ in. There shall be no variation under the specified length.

Ends

19. Pipe ends shall be machined as specified in the purchase order.

Finish

20. (*a*) The finished pipe shall be reasonably straight and free from injurious defects. At the discretion of the inspector representing the purchaser, finished pipe shall be subject to rejection if surface defects acceptable under Paragraph (*d*) are not scattered, but appear over a large area in excess of what is considered a workmanlike finish.

(*b*) *Depth of Injurious Defects.*—All defects shall be explored for depth. When the depth encroaches on the minimum wall thickness, such defects shall be considered injurious.

(*c*) *Repair by Welding.*—Repair of injurious defects shall be permitted only subject to the approval of the purchaser and with the further understanding that the composition of the welding rod shall be suitable for the composition of metal being welded. Defects shall be thoroughly chipped or ground out before welding. Only qualified operators and procedures in accordance with the ASME Boiler and Pressure Vessel Code, Section IX, shall be used. Local or full heat treatment in accordance with Section 6 shall follow welding. Local grinding following welding and retreating shall have a finish whose roughness height is not greater than 250 microinches.[5]

(*d*) *Defects Not Classified as Injurious.* Surface defects which do not encroach on the specified minimum wall thickness shall be removed either by machining or grinding, thereby "blending" the repaired surface with the surrounding unaffected surface area of the forging and otherwise be equal in surface finish.

Marking

21. (*a*) Each length of pipe manufactured in accordance with these specifications shall be legibly marked by stencilling, with the manufacturer's private identifying mark, with the ASTM Designation A 430, the length, the hydrostatic test pressure (when so tested), the grade, and an additional symbol S if the pipe conforms to the supplementary requirements specified in Paragraphs S1 to S8, and the heat number or manufacturer's number by which the heat can be identified. Marking shall begin approximately 12 in. from the end of each length. On pipe sizes larger than 4 in. the weight shall be given. When pipe marked as specified in this section is rejected, the ASTM Designation A 430 shall be cancelled.

(*b*) No steel indentation stamping shall be done without the consent of the purchaser.

(*c*) The marking paint or ink shall not contain any harmful metal or metal salts, such as zinc, lead or copper, which will cause corrosive attack on heating.

(*d*) When it is specified that certain requirements of these specifications are to be completed by the purchaser upon receipt of the material the manufacturer shall indicate that all requirements of the specifications have not been completed by a letter X, Y, or Z immediately following the specification number. This letter may be removed after completion of all requirements in accordance with these specifications. An explanation of specification requirements to be completed is provided in Section 22(*c*).

[5] See the American Standard for Surface Roughness, Waviness, and Lay (ASA No. B 46.1—1955).

Inspection

22. (*a*) The inspector representing the purchaser shall have free entry, at all times while work on the contract of the purchaser is being performed, to all parts of the manufacturer's works that concern the manufacture of the material ordered. The manufacturer shall afford the inspector, without charge, all reasonable facilities to satisfy him that the material is being furnished in accordance with these specifications. All tests and inspection shall be made at the place of manufacture prior to shipment and at the manufacturer's expense, unless otherwise specified, and shall be so conducted as not to interfere unnecessarily with the operation of the works. When specified in the order, the manufacturer shall notify the purchaser in time so that he may have his inspector present to witness any part of the manufacture or tests that may be desired.

(*b*) Upon the purchaser's request and at the purchaser's expense, retests shall be made from sections of material removed from any part of the pipe. Failure to meet the requirements stated in the body of these specifications shall be cause for rejection.

(*c*) *Certification.*—When agreed upon in writing between the manufacturer and the purchaser, a certification that the material conforms to the requirements of these specifications shall be the basis of acceptance of the material. Otherwise, the manufacturer shall report to the purchaser or his representative the results of the chemical analyses and mechanical tests made in accordance with these specifications. The certificate or report accomplished by the manufacturer shall include a statement of explanation for the letter added to the specification number (see Section 21 (d)), when all the requirements of these specifications have not been completed. The purchaser must certify that all requirements of the specifications have been completed before removal of the letter X, Y, or Z.

Rejection

23. Each length of pipe that develops injurious defects during shop working or application operations will be rejected, and the manufacturer shall be notified. No rejections under these or any other specifications shall be marked as specified in Section 21 for sale under these specifications.

SUPPLEMENTARY REQUIREMENTS FOR PIPE REQUIRING SPECIAL CONSIDERATION

The supplementary test requirements in Paragraphs S1 to S8 shall not be considered unless specified in the order. Those specified in the order shall be made at the mill, unless otherwise agreed upon, at the purchaser's expense and may be witnessed by his inspector before shipment of the material.

Check Analysis

S1. Check analysis may be made on any forging or length of pipe. Individual pieces failing to conform to the chemical requirements specified in Table I, with the tolerances permitted in Table II shall be rejected.

Transverse Tension Tests

S2. Transverse tension tests may be made on specimens from both ends of each length of pipe. This requirement applies only to pipe 8 in. and over in nominal diameter. If the specimen from either end of any length fails to conform to the mechanical properties specified in Section 10, that length shall be rejected (see Section 15(*a*)).

Flattening Test

S3. The flattening test specified in Section 12 may be made on specimens from both ends of each length of pipe. This requirement applies only to pipe over 2 in. in nominal diameter. Crop ends may be used. If the specimen from either end of any length fails to conform to the specified requirements, that length shall be rejected or cut back and retested if agreed upon.

Etching Tests

S4. The steel shall be homogeneous as shown by etching tests conducted in accordance with the Method of Macroetch Testing and Inspection of Steel Forgings (ASTM Designation: A 317). Etching tests shall be made on a cross-section from both ends of each pipe, and shall show sound and reasonably uniform material, free from injurious laminations, cracks and similar objectionable defects. If the specimen from either end of any length shows objectionable defects, one retest shall be permitted from that end. If this fails, the length shall be rejected. However, if removal of the defective end and subsequent retesting indicates the remainder of the length to be sound and reasonably uniform material, the manufacturer may offer the shortened length to the purchaser. Acceptance shall be a matter of agreement between the manufacturer and the purchaser.

Photomicrographs

S5. Photomicrographs at 100 diameters may be made from one end of each piece of pipe furnished in sizes 6 in. and larger in the as-furnished condition. Such photomicrographs shall be suitably identified as to pipe size, wall thickness, piece number, and heat. Such photomicrographs are for information only, and shall show the actual metal structure of the pipe as finished.

Ultrasonic Testing

S6. Each piece of pipe may be ultrasonically tested to determine its soundness throughout the entire length of the pipe in a manner to be agreed upon by the manufacturer and the purchaser. Failure to meet the requirements stated in the body of these specifications after further exploration shall be cause for rejection.

Hot Ductility Tests

S7. A high-temperature ductility test has been shown to have a significant bearing on the weldability of these steels, in heavy wall pipe sections, as determined by high-temperature pressure service performance. Upon mutual agreement between the purchaser and the manufacturer, such tests, on an agreed procedure and evaluation, may be performed on each heat of finished pipe produced. These tests are for information purposes only.

NOTE.—The term "hot ductility tests," as it relates to the material covered in these specifications, involves heating the metal to a temperature approximating those attained in the base metal adjacent to a weld and at rates simulating those occuring during welding, followed by fracturing rapidly at a decreasing temperature, usually in the range of 2200 to 2400 F. The measured reduction of area at the break is indicative of its high temperature ductility.

Hydrostatic Test

S8. A hydrostatic pressure test shall be applied as agreed upon by the manufacturer and the purchaser.

SPECIFICATION FOR LEADED CARBON STEEL PLATES OF FLANGE AND FIREBOX QUALITIES FOR FUSION WELDED BOILERS AND OTHER PRESSURE VESSELS

SA-433

(IDENTICAL WITH ASTM SPECIFICATION A 433–59T)

Scope

1. (*a*) This specification covers three types of leaded carbon steel plates of flange and firebox qualities, conforming in all respects with the Specifications for Low and Intermediate Tensile Strength Carbon-Steel Plates of Flange and Firebox Qualities (ASTM Designation: A 285), for Carbon-Silicon Steel Plates of Intermediate Tensile Ranges for Fusion-Welded Boilers and Other Pressure Vessels (ASTM Designation: A 201), and for High Tensile Strength Carbon-Silicon Steel Plates for Boilers and Other Pressure Vessels (ASTM Designation: A 212), except for the addition of lead in the range of 0.15 to 0.35 per cent.

(*b*) This material is intended for use in boilers and other pressure vessels in which the maximum operating temperatures shall not exceed 550 F. The maximum thickness of plates to be specified under this specification is 4 in. (see Note 1).

NOTE 1.—The maximum thickness of plates to be ordered for flange and firebox qualities for grades L-45, L-50, and L-55, and for flange quality of all grades shall be 2 in.

(*c*) This material is intended for fusion welding. Welding technique is of fundamental importance and it is presupposed that welding procedures will be in accordance with approved methods.

(*d*) Manufacturing operations involving elevated temperatures in the range of those encountered in torch cutting or welding, should be carried out under adequate ventilation.

General Conditions for Delivery

2. Material furnished under this specification shall conform to the applicable

TABLE I.—CHEMICAL REQUIREMENTS.

	Low and Intermediate Tensile Strength Type A (A 285 Type)					
	Flange			Firebox		
	Grade L-45	Grade L-50	Grade L-55	Grade L-45	Grade L-50	Grade L-55
Carbon, max, per cent:						
For plates ¾ in. and under in thickness	[a]	[a]	[a]	0.15	0.20	0.25
For plates over ¾ to 2 in., incl, in thickness	[a]	[a]	[a]	0.17	0.22	0.30
Manganese, max, per cent	0.80	0.80	0.80	0.80	0.80	0.80
Phosphorus, max, per cent:						
Acid	0.05	0.05	0.05	0.04	0.04	0.04
Basic	0.04	0.04	0.04	0.035	0.035	0.035
Sulfur, max, per cent	0.05	0.05	0.05	0.04	0.04	0.04
Lead (check analysis), per cent[b]	0.15 to 0.35	0.15 to 0.35	0.15 to 0.35	0.15 to 0.35	0.15 to 0.35	0.15 to 0.35

	Intermediate Tensile Strength Type B (A 201 Type)		High Tensile Strength Type C (A 212 Type)	
	Grade LK-55	Grade LK-60	Grade LK-65	Grade LK-70
Carbon, max, per cent:				
For plates 1 in. and under in thickness	0.20	0.24	0.28	0.31
For plates over 1 to 2 in., incl, in thickness	0.24	0.27	0.31	0.33
For plates over 2 to 4 in., incl, in thickness	0.27	0.30	0.33	0.35
Manganese, max, per cent	0.80	0.80	0.90	0.90
Phosphorus, max, per cent:				
Flange	0.04	0.04	0.04	0.04
Firebox	0.035	0.035	0.035	0.035
Sulfur, max, per cent:				
Flange	0.05	0.05	0.05	0.05
Firebox	0.04	0.04	0.04	0.04
Silicon, per cent:				
Ladle analysis	0.15 to 0.30	0.15 to 0.30	0.15 to 0.30	0.15 to 0.30
Check analysis	0.13 to 0.33	0.13 to 0.33	0.13 to 0.33	0.13 to 0.33
Lead (check analysis), per cent[b]	0.15 to 0.35	0.15 to 0.35	0.15 to 0.35	0.15 to 0.35

[a] The required mechanical properties and current mill practice normally result in the carbon content not exceeding 0.35 per cent. However, determination of this element or certification that this limit is complied with shall be made only when specified in the inquiry and contract or order.

[b] Ladle analysis not applicable as lead is added to the ingot. Check analysis for lead shall be made from the part of the plate representing the bottommost part of the ingot as used.

requirements of the current edition of the Specification for General Requirements for Delivery of Rolled Steel Plates of Flange and Firebox Qualities (ASTM Designation: A 20).

Process

3. The steel shall be made by either or both of the following processes: open hearth or electric furnace.

Heat Treatment

4. (*a*) Plates over 2 in. in thickness shall be treated to produce grain refinement either by normalizing or heating uniformly for hot forming. If the required treatment is to be obtained in conjunction with the hot forming operation, the temperature to which the plates are heated for hot forming shall be equivalent to and shall not significantly exceed the normalizing temperature. If the treatment of the plates is not specified to be done at the plate manufacturer's plant, the testing shall be carried out in accordance with Paragraph (*b*).

(*b*) When a fabricator is equipped and elects to perform the required normalizing or fabricates by hot forming as provided in Paragraph (*a*), the plates shall be accepted on the basis of mill tests made on specimens heat treated in accordance with the purchaser's order requirements. If the heat treatment temperatures are not indicated on the purchase order, the plate manufacturer shall heat treat the specimens under conditions he considers appropriate for grain refinement and to meet the test requirements. The plate manufacturer shall inform the fabricator of the procedure followed in treating the specimens at the mill.

(*c*) The purchaser shall indicate in his orders to the plate manufacturer whether the rolling mill or the fabricator shall perform the treatment of the plates.

(*d*) When the plates are to be normalized at the plate manufacturer's plant, the mechanical properties shall be determined on specimens simultaneously treated with the plates.

TABLE II.—TENSILE REQUIREMENTS.

	Low and Intermediate Tensile Strength Type A (A285 Type)					
	Flange			Firebox		
	Grade L-45	Grade L-50	Grade L-55	Grade L-45	Grade L-50	Grade L-55
Tensile strength, psi[a]	45,000 to 55,000	50,000 to 60,000	55,000 to 65,000	45,000 to 55,000	50,000 to 60,000	55,000 to 65,000
Yield point, min, psi	24,000	27,000	30,000	24,000	27,000	30,000
Elongation in 8 in., min, per cent	28[b]	26[b]	24[b]	29[b]	27[b]	25[b]
Elongation in 2 in., min, per cent	31	29	28	32	30	29

	Intermediate Tensile Strength Type B (A 201 Type)		High Tensile Strength Type C (A 212 Type)	
	Grade LK-55	Grade LK-60	Grade LK-65	Grade LK-70
Tensile strength, psi[a]	55,000 to 65,000	60,000 to 72,000	65,000 to 77,000	70,000 to 85,000
Yield point, min, psi	30,000	32,000	35,000	38,000
Elongation in 8 in., min, per cent:				
Flange	24[b]	22[b]	20[b]	18[b]
Firebox	25[b]	22[b]	21[b]	19[b]
Elongation in 2 in., min, per cent:				
Flange	28	25	23	21
Firebox	29[c]	26[c]	24[c]	22[c]

[a] On the tension test specimen taken from the top of firebox plates, tensile strength only is to be determined, and it shall not exceed 60,000 psi for Grade L-45, 65,000 psi for Grade L-50, 70,000 psi for Grade L-55, 67,000 psi for grade LK-55, 74,000 psi for grade LK-60, 79,000 psi for grade LK-65, nor 87,000 psi for grade LK-70.

[b] For material under $\frac{5}{16}$ in. in thickness, a deduction from the percentage of elongation in 8 in. specified in Table II of 1.25 per cent shall be made for each decrease of $\frac{1}{32}$ in. of the specified thickness below $\frac{5}{16}$ in. For material over $\frac{3}{4}$ in. in thickness, a deduction from the percentage of elongation in 8 in. specified in Table II of 0.5 per cent shall be made for each increase of $\frac{1}{8}$ in. of the specified thickness above $\frac{3}{4}$ in. This deduction shall not exceed 3 per cent.

[c] For material over $3\frac{1}{2}$ in. in thickness, a deduction from the percentage of elongation in 2 in. specified in Table II of 0.5 per cent shall be made for each increase of $\frac{1}{2}$ in. of the specified thickness above $3\frac{1}{2}$ in. This deduction shall not exceed 3 per cent.

TABLE III.—BEND DIAMETERS.

Thickness of Material, in.	Ratio of Bend Diameter to Thickness of Specimen for Grade Designated						
	L-45	L-50	L-55	LK-55	LK-60	LK-65	LK-70
1 and under	1	1	1	½	1	1½	2
Over 1 to 1½, incl.	1½	1½	1½	1	1½	2	2
Over 1½ to 3, incl[a]	2	2	2	1½	2	2	2½
Over 3 to 4, incl	....	....	....	2	2½	2½	3

[a] Grades L-45, L-50 and L-55 are limited to 2 in. in maximum thickness.

Test Specimens

8. (*a*) For plates 2 in. and under in thickness the test specimens shall be prepared for testing from the material in its rolled condition.

(*b*) For plates over 2 in. in thickness the test specimen shall be prepared from the material in its heat-treated condition, or from full thickness samples similarly and simultaneously treated (see Section 4).

(*c*) When so specified in the purchase order with the mill, test specimens representing the plates shall be stress-relieved by gradually and uniformly heating them to a temperature between 1100 and 1200 F (or a temperature range otherwise agreed upon between the manufacturer and the fabricator), holding at temperature for at least 1 hr per in. of thickness and cooling in still atmosphere to a temperature not exceeding 600 F.

Number of Tests

9. Two tension tests, one bend test and one homogeneity test shall be made from each firebox steel plate as rolled. One tension test and one bend test shall be made from each flange steel plate as rolled.

NOTE 2.—The term "plate as rolled" used here refers to the unit plate rolled from a slab or directly from an ingot in its relation to the location and number of specimens; not to its condition.

Chemical Composition

5. The steel shall conform to the requirements as to chemical composition prescribed in Table I for the type and grade specified.

Mechanical Properties

6. The material as represented by the tension test specimens shall conform to the requirements as to tensile properties prescribed in Table II for the type and grade specified.

Bending Properties

7. The bend test specimen shall stand being bent cold through 180 deg without cracking on the outside of the bent portion to an inside diameter which shall have the relation to the thickness of the specimen prescribed in Table III. When the test is made on a specimen reduced in thickness, the rolled surface shall be on the outer curve of the bend.

SPECIFICATION FOR CARBON STEEL PLATES WITH IMPROVED TRANSITION PROPERTIES

SA-442

(IDENTICAL WITH ASTM SPECIFICATION A 442-60T)

Scope

1. This specification covers carbon-manganese and carbon-silicon steel plates of flange quality, up to 1½ in., inclusive, in thickness for use in boilers and other pressure vessels. This material is intended for fusion welding. Definite manganese and silicon contents are specified in order to limit the carbon to the lowest practical amount consistent with the specified tensile strengths and the thickness of the material. Welding technique is of fundamental importance and it is presupposed that welding procedure will be in accordance with approved methods.

General Conditions for Delivery

2. Material furnished under this specification shall conform to the applicable requirements of the current edition of the Specification for General Requirements for Delivery of Rolled Steel Plates of Flange and Firebox Qualities (ASTM Designation: A 20).

Process

3. The steel shall be made by one or both of the following processes: open-hearth, or electric-furnace.

Heat Treatment

4. (*a*) Plates over 1 in. in thickness may require heat treatment to produce grain refinement either by normalizing or heating uniformly for hot forming. If the required treatment is to be obtained in conjunction with the hot-forming operation, the temperature to which the plates are heated for hot forming shall be equivalent to and shall not significantly exceed the normalizing temperature. If the treatment of the plates is not specified to be done at the plate manufacturer's plant, the testing shall be carried out in accordance with Paragraph (*b*).

(*b*) When a fabricator is equipped and elects to perform the required normalizing or fabricates by hot forming as provided in Paragraph (*a*), the plates shall be accepted on the basis of mill tests made on specimens heat treated in accordance with the purchaser's order requirements. If the heat treatment temperatures are not indicated on the purchase order, the plate manufacturer shall heat treat the specimens under conditions he considers appropriate for grain refinement, and to meet the test requirements. The plate manufacturer shall inform the fabricator of the procedure followed in treating the specimens at the mill.

(*c*) The purchaser shall indicate in his orders to the plate manufacturer whether the rolling mill or the fabricator shall perform the treatment of the plates.

(*d*) When the plates are to be normalized at the plate manufacturer's plant, the mechanical properties shall be determined on specimens simultaneously treated with the plates.

Chemical Composition

5. The steel shall conform to the requirements for chemical composition prescribed in Table I.

TABLE I.—CHEMICAL REQUIREMENTS.

Element	Thickness	Grade 55[a]	Grade 60[b]
Carbon, max, per cent	1 in. and under	0.22	0.24
	Over 1 in. to 1½ in., incl.	0.24	0.27
Manganese,[b] per cent	1 in. and under	Ladle, 0.80 to 1.10 Check, 0.76 to 1.14	0.80 to 1.10 0.76 to 1.14
	Over 1 in. to 1½ in., incl.	Ladle, 0.60 to 0.90 Check, 0.56 to 0.94	0.60 to 0.90 0.56 to 0.94
Phosphorus, max, per cent	...	0.04	0.04
Sulfur, max, per cent	...	0.05	0.05
Silicon,[b] per cent	Over 1 in. to 1½ in., incl.	Ladle, 0.15 to 0.30 Check, 0.13 to 0.33	0.15 to 0.30 0.13 to 0.33

[a] Plates over 1 in. shall be made to fine grain practice. They may be required to be normalized, if so specified.

[b] The same silicon and manganese content which is required for thicknesses over 1 in. may be applied for thicknesses of 1 in. and under, provided the steel is made to fine grain practice.

Tensile Properties

6. (*a*) The material as represented by the tension test specimens shall conform to the requirements for tensile properties prescribed in Table II.

(*b*) For material under 5/16 in. in thickness, a deduction of 1.25 per cent from the percentage of elongation in 8 in. specified in Table II shall be made for each decrease of 1/32 in. of the specified thickness below 5/16 in.

(*c*) For material over ¾ in. in thickness, a deduction of 0.5 per cent from the percentage of elongation in 8 in. specified in Table II shall be made for each increase of ⅛ in. of the specified thickness above ¾ in. This deduction shall not exceed 3 per cent.

TABLE II.—TENSILE REQUIREMENTS.

	Grade 55	Grade 60
Tensile strength, psi	55 000 to 65 000	60 000 to 72 000
Yield point, min, psi	30 000	32 000
Elongation in 8 in., min, per cent	24	22
Elongation in 2 in., min, per cent	28	25

TABLE III.—BEND DIAMETERS.

Thickness of Material, in.	Ratio of Bend Diameter to Thickness of Specimen	
	Grade 55	Grade 60
1 in. and under	1	1
Over 1 to 1½ in., incl.	1½	1½

Bending Properties

7. The bend-test specimens shall stand being bent cold through 180 deg, without cracking on the outside of the bent portion, to an inside diameter based on the thickness of the specimen as prescribed in Table III. When the test is made on a specimen reduced in thickness, the rolled surface shall be on the outer curve of the bend.

Test Specimens

8. (*a*) For plates 1 in. and under in thickness the test specimens shall be prepared for testing from the material in its rolled condition.

(*b*) For plates over 1 in. in thickness the test specimens shall be prepared for testing from the material in its rolled condition or from the material in its heat treated condition, or from full thickness samples similarly and simultaneously treated (see Section 4).

(*c*) When so specified on the purchase order with the mill, test specimens representing the plates shall be stress-relieved by gradually and uniformly heating them to a temperature between 1100 and 1200 F (or a temperature range otherwise agreed upon between the manufacturer and the fabricator), holding at temperature for at least 1 hr per in. of thickness, and cooling in still atmosphere to a temperature not exceeding 600 F.

Number of Tests

9. One tension test and one bend test shall be made from each plate as rolled.

NOTE.—The term "plate as rolled" used here refers to the unit plate rolled from a slab or directly from an ingot in its relation to the location and number of specimens, not to its condition.

SPECIFICATION FOR HIGH TENSILE STRENGTH CARBON-MANGANESE STEEL PLATES FOR UNFIRED PRESSURE VESSELS

SA-455

(IDENTICAL WITH ASTM SPECIFICATION A 455-61T)

Scope

1. This specification covers high-tensile strength, carbon-manganese steel plates of flange quality in thicknesses up to 0.580 in. inclusive, for use in unfired pressure vessels. This material is intended for fusion welding. Definite manganese content is specified in order to limit the carbon to the lowest practical amount consistent with the specified tensile strength and the thickness of the material. Welding technique is of fundamental importance, and it is presupposed that welding procedure will be in accordance with the approved methods for this class of material.

General Conditions for Delivery

2. Material furnished under this specification shall conform to the applicable requirements of the current edition of the Specifications for General Requirements for Delivery of Rolled Steel Plates of Flange and Firebox Qualities (ASTM Designation: A 20).

Process

3. The steel shall be made by either or both the open-hearth or electric-furnace processes.

TABLE I.—CHEMICAL REQUIREMENTS.

Carbon, max, per cent	0.33
Manganese, per cent:	
Ladle analysis	0.85 to 1.20
Check analysis	0.81 to 1.25
Phosphorus, max, per cent	0.040
Sulfur, max, per cent	0.050
Silicon, max, per cent:	
Ladle analysis	0.10
Check analysis	0.13

Chemical Composition

4. The steel shall conform to the requirements as to chemical composition prescribed in Table I.

Tensile Properties

5. (*a*) The material as represented by the tension test specimens shall conform to the requirements as to tensile properties prescribed in Table II.

(*b*) For material under $\frac{5}{16}$ in. in thickness, a deduction of 1.25 per cent from the percentage of elongation in 8 in. specified in Table II shall be made for each decrease of $\frac{1}{32}$ in. of the specified thickness below $\frac{5}{16}$ in.

Bending Properties

6. The bend test specimens shall stand being bent cold (room temperature) through 180 deg without cracking on the outside of the bent portion to an inside diameter three times the thickness of the specimen.

TABLE II.—TENSILE REQUIREMENTS.

	Grade A (Up to 0.375 in., incl)	Grade B (Over 0.375 to 0.580 in., incl)
Tensile strength, psi	75 000 to 90 000	73 000 to 88 000
Yield point, min, psi	37 500	36 500
Elongation in 8 in., min, per cent	17[a]	17

[a] See Section 5(*b*).

Test Specimens

7. Test specimens shall be prepared for testing from material in its rolled condition.

Number of Tests

8. One tension test and one bend test shall be made from each plate as rolled.

NOTE.—The term "plate as rolled" used here refers to the unit plate rolled from a slab or directly from an ingot in its relation to the location and number of specimens, not to its condition.

NONFERROUS MATERIALS

SPECIFICATION FOR COPPER PLATES FOR LOCOMOTIVE FIREBOXES

SB-11

(IDENTICAL WITH ASTM SPECIFICATION B 11-61)

Scope

1. This specification covers copper plates for locomotive fireboxes, as follows:[3]

Types ETP/FRTP, Tough pitch copper (nonarsenical),

NOTE.—Tough pitch copper (nonarsenical) may be furnished at the option of the manufacturer as either electrolytic (type ETP) or fire-refined (type FRTP).

Type DHP, Phosphorized copper (nonarsenical),

Type ATP, Tough pitch arsenical copper, and

Type DPA, Phosphorized arsenical copper.

Basis of Purchase

2. Orders for material under this specification shall include the following information:

(*1*) Type of copper (Section 1),

(*2*) Dimensions: length, width, thickness (Section 12 and Table II), and

(*3*) Weight: total weight of each size.

NOTE.—When these plates are to be welded either types DHP or DPA should be specified.

Manufacture

3. (*a*) The material shall be of such quality and purity that the finished product shall have the properties and characteristics prescribed in this specification.

(*b*) The copper shall be hot-rolled from suitable cakes which may be either fire-refined or electrolytic.

[3] Types ETP/FRTP, DHP, ATP and DPA, formerly designated grades 1, 2, 3, and 4, respectively, are classified in the Classification of Coppers (ASTM Designation: B 224).

Chemical Composition

4. The copper shall conform to the requirements as to chemical composition prescribed in Table I.

TABLE I.—CHEMICAL REQUIREMENTS.

Type	Copper (plus silver), min, per cent	Arsenic, per cent	Phosphorus, per cent
ETP } FRTP }	99.88	....	.....
DHP	99.90	....	0.015 to 0.040
ATP	99.40	0.15 to 0.50	.....
DPA	99.40	0.15 to 0.50	0.015 to 0.040

Sampling for Chemical Analysis

5. Samples for chemical analysis shall be taken in accordance with the Method of Sampling Wrought Non-Ferrous Metals and Alloys for Determination of Chemical Composition (ASTM Designation: E 55). The lot size, portion size, and selection of pieces shall be as follows:

Lot Size.—5000 lb or fraction thereof.

Portion Size.—Pieces from four individual lengths of finished product. If the lot consists of less than the number of lengths indicated in the portion size, a piece shall be taken from each individual length.

Minimum Weight of Composite Sample.—150 g divided into three equal parts.

Tensile Properties

6. The material shall conform to the following requirements as to tensile properties:

	Types ETP, FRTP and DHP (Nonarsenical)	Types ATP and DPA (Arsenical)
Tensile strength, min, psi	30 000	31 000
Elongation in 8 in., min, per cent	30	35

NOTE.—Material specified to meet requirements of the ASME Boiler and Pressure Vessel Code shall have a minimum yield strength of 10,000 psi at 0.5 per cent extension under load.

Bending Properties

7. The bend test specimen shall stand being bent both hot (500 to 700 C) and cold through 180 deg without cracking on the outside of the bent portion as follows: For material 1 in. or under in thickness, flat on itself; and for material over 1 in. in thickness, around a pin the diameter of which is equal to the thickness of the specimen.

Test Specimens

8. Tension and bend test specimens shall be taken so that the longitudinal axis of the specimens is parallel to the direction of rolling, and from the finished rolled material. They shall be of the full thickness of material as rolled, and shall be machined to the form and dimensions shown in Fig. 6 of Methods E 8; except that bend test specimens may be machined with both edges parallel.

Number of Tests

9. (*a*) One tension, one cold-bend, and one hot-bend test shall be made from each plate as rolled.

(*b*) If any test specimen develops flaws it may be discarded and two other specimens substituted, each of which shall be free from flaws. If flaws appear

TABLE II.—LOT WEIGHT TOLERANCES OF PLATES ORDERED TO THICKNESS.

Thickness, in.	Weight Tolerances, plus and minus, Expressed in Percentage of Theoretical Weight				
	48 in. and Under in Width	Over 48 to 60 in. in Width	Over 60 to 72 in. in Width	Over 72 to 90 in. in Width	Over 90 to 110 in. in Width
1/8 and under	8	9.5	11	12.5	14
Over 1/8 to 5/16	6.5	8	9.5	11	12.5
Over 5/16 to 1/4	6	7.5	8.5	9	10
Over 1/4 to 5/16	5.5	7	8	8.5	9
Over 5/16 to 3/8	5	6	7	7.5	8
Over 3/8 to 7/16	4.5	5	6	7	7.5
Over 7/16 to 1/2	4	4.5	5.5	6	6.5
Over 1/2 to 5/8	3.5	4.5	5	5.5	6
Over 5/8 to 3/4	3	4	4.5	5	5.5
Over 3/4 to 1	2.75	3.5	4	4.5	5
Over 1 to 1 1/2	2.5	3	3.5	4	4.5
Over 1 1/2 to 2, incl	2.25	2.75	3.25	3.75	4.25

in either or both of the substituted specimens the lot shall be rejected.

(*c*) If the percentage of elongation of any tension test specimen is less than that specified in Section 6 and any part of the fracture is outside the middle third of the gage length, as indicated by scribe scratches marked on the specimen before testing, a retest shall be allowed.

(*d*) If any test specimen shows defective machining it may be discarded and another specimen substituted.

Methods of Test and Chemical Analysis

10. The properties and chemical compositions enumerated in this specification shall, in case of disagreement, be determined in accordance with the following methods of the American Society for Testing Materials:

Test	ASTM Designation[a]
Chemical Analysis	E 53, E 62
Tension	E 8

Significance of Numerical Limits

11. For purposes of determining compliance with the specified limits for requirements of the properties listed in the following table, an observed value or a calculated value, shall be rounded off as indicated in accordance with the rounding-off method of the Recommended Practices for Designating Significant Places in Specified Limiting Values (ASTM Designation: E 29):

Property	Rounded-Off Unit for Observed or Calculated Value
Chemical Composition	Nearest unit in the last right-hand place of figures
Tensile Strength	Nearest 1000 psi
Elongation:	
5 per cent and over	Nearest 1 per cent

Dimensions, Weights, and Permissible Variations

12. (*a*) The weight of each lot of five or more places of the same type and the same specified dimensions when ordered to thickness shall not vary from the nominal by more than the amount prescribed in Table II. The weight of any individual plate may vary from the nominal by not more than one-third in excess of the tolerances prescribed in Table II. The tolerance of lots of less than five plates shall be governed by the tolerance of individual plates. One cubic inch of rolled copper is assumed to weigh 0.323 lb.

(*b*) Length tolerances for square sheared metal in all widths 120 in. and under for all lengths shall be $\pm\frac{1}{16}$ in. If tolerances are specified as all plus or all minus, double the values given.

(*c*) Length tolerances for sawed metal for all widths up to and including 120 in. shall be $\pm\frac{1}{4}$ in. If tolerances are specified as all plus or all minus, double the values given.

(*d*) Width tolerances for square sheared metal or sawed metal for widths up to and including 120 in. for all thickness, shall be $\pm\frac{1}{16}$ in. If tolerances are specified as all plus or all minus, double the values given.

Workmanship and Finish

13. The plates shall be free from injurious defects and shall have a workmanlike finish.

Marking

14. The name or brand of the manufacturer, plate number, and type shall be stamped on each plate. The plate number shall be legibly stamped on each test specimen.

Inspection

15. The manufacturer shall afford the inspector, without charge, all reasonable facilities to satisfy him that the material is being furnished in accordance with this specification. All tests (except check analysis) and inspection shall be made at the place of manufacture prior to shipment, unless otherwise specified, and shall be so conducted as not to interfere unnecessarily with the operation of the works.

Rejection

16. Material that fails to conform to this specification will be rejected, and the manufacturer shall be notified within 30 days after receipt of the material.

Rehearing

17. Samples tested in accordance with Section 5 that represent rejected plates shall be preserved for two weeks from the date of the test report. In case of dissatisfaction with the results of the tests, the manufacturer may make claim for a rehearing within that time.

[a] These designations refer to the following methods of testing:
Method for Chemical Analysis of Copper (Electrolytic Determination of Copper) (ASTM Designation: E 53),
Photometric Methods for Chemical Analysis of Copper and Copper-Base Alloys (ASTM Designation E 62), and
Methods of Tension Testing of Metallic Materials (ASTM Designation: E 8).

SPECIFICATION FOR COPPER RODS FOR LOCOMOTIVE STAYBOLTS

SB-12

(IDENTICAL WITH ASTM SPECIFICATION B 12-61)

Scope

1. This specification covers arsenical and nonarsenical copper rods for locomotive staybolts.

Basis of Purchase

2. Orders for material under this specification shall include the following information:

(*1*) Whether arsenical or nonarsenical (Section 4),
(*2*) Dimensions: length and diameter (Section 12), and
(*3*) Weight: total weight of each size.

Manufacture

3. (*a*) The material shall be of such quality and purity that the finished product shall have the properties and characteristics prescribed in this specification.

(*b*) The arsenical copper will normally be of types DPA or ATP and the nonarsenical copper of types ETP, FRTP, DHP, DLP or OF of the Classification of Coppers (ASTM Designation: B 224).

(*c*) The rods shall be finished to dimensions by hot or cold working, or both, from suitable bars as required.

Chemical Composition

4. The copper shall conform to the following requirements as to chemical composition:

(*a*) *Arsenical Copper.*—Arsenical copper shall contain 0.15 to 0.50 per cent of arsenic with the copper plus silver plus arsenic content 99.88 per cent, min.

(*b*) *Nonarsenical Copper.*—Nonarsenical copper shall have a purity of at least 99.90 per cent, as determined by electrolytic assay, silver being counted as copper.

Sampling for Chemical Analysis

5. Samples for chemical analysis shall be taken in accordance with the Method of Sampling Wrought Nonferrous Metals and Alloys for Determination of Chemical Composition (ASTM Designation: E 55). The lot size, portion size, and selection of pieces shall be as follows:

Lot Size.—10,000 lb or fraction thereof.

Portion Size.—Pieces from four individual lengths of finished product. If the lot consists of less than the number of lengths indicated in the portion size, a piece shall be taken from each individual length.

Minimum Weight of Composite Sample.—150 g divided into three equal parts.

Tensile Properties

6. The material shall conform to the following requirements as to tensile properties:

	Arsenical	Nonarsenical
Tensile Strength, min, psi	31 000	30 000
Elongation in 4 × Diameter of Specimen, min, per cent[a]	40	35

[a] In any case a minimum gage length of 1 in. shall be used.

NOTE 1.—Material specified to meet requirements of the ASME Boiler and Pressure Vessel Code shall have a minimum yield strength of 10,000 psi at 0.5 per cent extension under load.

Bending Properties

7. The bend test specimen shall stand being bent cold through 180 deg flat on itself without cracking on the outside of the bent portion.

Test Specimens

8. Tension and bend test specimens shall be of the full-size section of the rods as rolled.

NOTE 2.—The full size section of the tension test specimen may be slightly reduced as prescribed in Section 10 (*a*) Item (*1*) of Methods E 8 to insure fracture within the gage length.

Number of Tests

9. (*a*) Two tension and two bend tests shall be made on each lot of 10,000 lb or fraction thereof on samples selected in accordance with Section 10.

(*b*) If any test specimen develops flaws it may be discarded and two other specimens substituted, each of which shall be free from flaws. If flaws appear in either or both of the substituted specimens the lot shall be rejected.

(*c*) If the percentage of elongation of any tension test specimen is less than that specified in Section 6 and any part of the fracture is outside the middle third of gage length, as indicated by scribe scratches marked on the specimen before testing, a retest shall be allowed.

(*d*) If any test specimen shows defective machining it may be discarded and another specimen substituted.

Methods of Test and Chemical Analysis

10. The properties and chemical compositions enumerated in this specification shall, in case of disagreement, be determined in accordance with the following methods of the American Society for Testing and Materials:

Test	ASTM Designation[a]
Chemical Analysis	E 53
Tension	E 8

[a] These designations refer to the following methods of testing:

Method for Chemical Analysis of Copper (Electrolytic Determination of Copper) (ASTM Designation: E 53), and
Methods of Tension Testing of Metallic Materials (ASTM Designation: E 8).

Significance of Numerical Limits

11. For purposes of determining compliance with the specified limits for requirements of the properties listed in the following table, an observed value or a calculated value shall be rounded off as indicated in accordance with the rounding-off method of the Recommended Practices for Designating Significant Places in Specified Limiting Values (ASTM Designation: E 29):

Property	Rounded-Off Unit for Observed or Calculated Value
Chemical Composition	Nearest unit in the last right-hand place of figures
Tensile Strength	Nearest 1000 psi
Elongation:	
5 per cent and over	Nearest 1 per cent

Dimensional Tolerances

12. (*a*) For the purpose of determining conformance with the dimensional requirements prescribed in this specification, any measured value outside the specified limiting values for any dimension may be cause for rejection.

(*b*) *Diameter.*—The rods shall be round within 0.01 in., and shall not vary more than 0.01 in. over nor more than 0.005 in. under the specified size.

(*c*) *Length.*—The material shall be furnished in stock lengths with ends, unless the order specifies stock lengths, specific lengths, or specific lengths with ends. Length tolerances and schedule of lengths shall be as prescribed in Tables I and II.

TABLE I.—LENGTH TOLERANCES (FULL-LENGTH PIECES, SPECIFIC AND STOCK LENGTHS WITH OR WITHOUT ENDS).

NOTE.—The length tolerances in this table are all plus; if all minus tolerances are desired, use the same values; if tolerances are desired plus and minus, halve the values given.

Length Classification	Tolerances, All Plus, in. (Applicable only to Full-Length Pieces)
Specific lengths	3/8
Specific lengths with ends	1
Stock lengths with or without ends	1[a]

[a] As stock lengths are cut and placed in stock in advance of orders, departure from this tolerance is not practicable.

TABLE II.—SCHEDULE OF LENGTHS (SPECIFIC AND STOCK) WITH ENDS.

Diameter, in.	Nominal Length, ft	Shortest Permissible Length,[a] per cent of Nominal Length	Maximum Permissible Weight of Ends, per cent of Lot Weight
0.500 and under	6 to 14, incl	75	20
Over 0.500 to 1.00, incl	6 to 14, incl	70	30
Over 1.00 to 1.500, incl	6 to 12, incl	60	40
Over 1.500 to 2.00, incl	6 to 12, incl	50	45
Over 2.00 to 3.00, incl	6 to 10, incl	40	50

[a] Expressed to the nearest ½ ft.

Workmanship and Finish

13. The rods shall be free from injurious defects and shall have a workmanlike finish.

Marking

14. The rods shall, when loaded for shipment, be properly separated and marked with the name or brand of the manufacturer and the lot number for identification. The lot number shall be legibly marked on each test specimen.

Inspection

15. The manufacturer shall afford the inspector, without charge, all reasonable facilities to satisfy him that the material is being furnished in accordance with this specification. All tests (except check analysis) and inspection shall be made at the place of manufacture prior to shipment, unless otherwise specified, and shall be so conducted as not to interfere unnecessarily with the operation of the works.

Rejection

16. Material that fails to conform to this specification will be rejected, and the manufacturer shall be notified within 30 days after receipt of the material.

Rehearing

17. Samples tested in accordance with Section 5 that represent rejected rods shall be preserved for two weeks from the date of the test report. In case of dissatisfaction with the results of the tests, the manufacturer may make claim for a rehearing within that time.

SPECIFICATION FOR SEAMLESS COPPER BOILER TUBES

SB-13

(IDENTICAL WITH ASTM SPECIFICATION B 13-56)

Scope

1. This specification covers seamless arsenical and nonarsenical copper tubes for locomotive boilers. Arsenical copper will normally be of the type DPA and nonarsenical of the types DHP, DLP or OF of the Classification of Coppers (ASTM Designation: B 224).

NOTE 1.—In the event copper boiler tubes for welding purposes are desired, deoxidized copper should be ordered to the Specification for Seamless Copper Tube (ASTM Designation: B 75) insofar as chemical composition requirements only are concerned. Other requirements shall be in accordance with these Specifications B 13.

Basis of Purchase

2. Orders for material under this specification shall include the following information:

(*1*) Whether arsenical or nonarsenical (Section 1 and Note 1),
(*2*) Temper (Section 6),
(*3*) Diameter and gage (Table I),
(*4*) Length, and
(*5*) Total number of each size.

Manufacture

3. The copper shall be fire-refined or electrolytic and shall be made into tubes either by the hot-rolling or cold-drawing process. It shall be finished by cold drawing.

Chemical Composition

4. The copper shall conform to the following requirements as to chemical composition:

(*a*) *Arsenical Copper.*—Arsenical copper shall have a purity of at least 99.40 per cent as determined by electrolytic assay, silver being counted as copper, and the arsenic content shall be 0.15 to 0.50 per cent. The total copper plus silver plus arsenic content shall not be less than 99.88 per cent.

(*b*) *Nonarsenical Copper.*—Nonarsenical copper shall have a purity of at least 99.90 per cent, as determined by electrolytic assay, silver being counted as copper.

Chemical Analysis

5. (*a*) Samples for chemical analysis shall be taken in accordance with the Method of Sampling Wrought Non-Ferrous Metals and Alloys for Determination of Chemical Composition (ASTM Designation: E 55). The lot size, portion size, and selection of pieces shall be as follows:

Lot Size.—600 tubes or fraction thereof.

Portion Size.—Pieces from two individual lengths of finished product.

Minimum Weight of Composite Sample.—150 g divided into three equal parts.

(*b*) If the analysis of any one tube does not conform to the requirements specified, an analysis of two additional tubes from the same lot shall be made, each of which shall conform to the requirements specified.

Temper

6. Tubes shall be furnished hard or annealed, as specified.

NOTE 2.—Material specified to meet requirements of the ASME Boiler and Pressure Vessel Code shall have in the annealed condition a minimum tensile strength of 30,000 psi and a minimum yield strength of 9000 psi at 0.5 per cent extension under load. The tensile properties shall, in case of disagreement, be determined in accordance with the Methods of Tension Testing of Metallic Materials (ASTM Designation: E 8).

Tension test specimens shall be of the full section of the tube and shall conform to the requirements of Section 13(*a*) of Methods E 8, unless the limitations of the testing machine preclude the use of such a specimen. Test specimens conforming to type No. 1 of Fig. 13 (Section 13(*b*)) of Methods E 8 may be used when a full section specimen cannot be tested.

Whenever tension test results are obtained from both full size and from machined test specimens and they differ, the results obtained from full size test specimens shall be used to determine conformance to the specification requirements.

Tension test results on material covered by this specification are not seriously affected by variations in speed of testing. A considerable range of testing speed is permissible; however, the range of stressing to the yield strength should not exceed 100,000 psi per min. Above the yield strength the movement per minute of the testing machine head under load should not exceed 0.5 in. per in. of gage length (or distance between grips for full section specimens).

Flange Test

7. (*a*) A test specimen not more than 4 in. in length shall be capable of having a flange turned over at right angles to the body of the tube, without cracking or showing flaws. This flange, as measured from the outside of the tube, shall be ⅜ in. in width for tubes 2½ in. or under in outside diameter, and ½ in. in width for tubes over 2½ in. in outside diameter.

(*b*) In making the flange test, it is recommended that the flaring tool and die block shown in Fig. 1 be used.

Crush Test

8. A test specimen 2½ in. in length shall stand crushing longitudinally until the outside folds are in contact, without

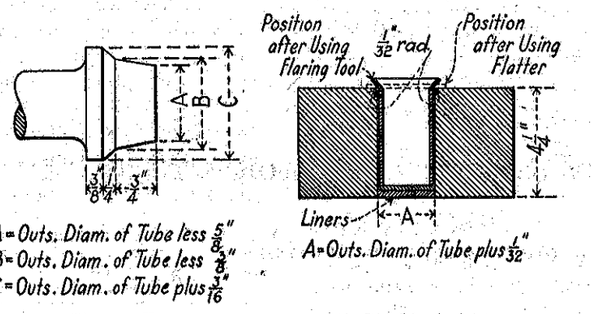

FIG. 1.—Flaring Tool and Die Block for Flange Test.

cracking or showing flaws.

Hydrostatic Test

9. Each tube shall withstand an internal hydrostatic pressure of 750 psi. The hydrostatic pressure test shall be applied to the finished tubes before annealing.

Test Specimens

10. (*a*) Test specimens shall consist of sections cut from tubes selected by the inspector representing the purchaser from the lot offered for shipment. They shall be smooth on the ends and free from burrs.

(*b*) Test specimens taken from hard tubes shall be annealed before testing.

(*c*) All specimens shall be tested at room temperature.

Number of Tests

11. (*a*) One flange and one crush test shall be made from each of two tubes in each lot of 250 tubes or fraction thereof.

(*b*) Each tube shall be subjected to the hydrostatic test specified in Section 9.

Retests

12. If the results of the physical tests of only one tube from any lot do not conform to the requirements specified, retests of two additional tubes from the same lot shall be made, each of which shall conform to the requirements specified.

Methods of Chemical Analysis

13. The chemical compositions enumerated in this specification shall, in case of disagreement, be determined in accordance with the following methods of the American Society for Testing Materials:

Test	ASTM Designation[a]
Chemical Analysis	E 53 and E 62

[a] These designations refer to the following methods of testing:
Method for Chemical Analysis of Copper (Electrolytic Determination of Copper) (ASTM Designation: E 53), and
Photometric Methods for Chemical Analysis of Copper and Copper-Base Alloys (ASTM Designation: E 62).

Significance of Numerical Limits

14. For purposes of determining compliance with the specified limits for requirements of the properties listed in the following table, an observed value or a calculated value, shall be rounded off as indicated in accordance with the rounding-off method of the Recommended Practices for Designating Significant Places in Specified Limiting Values (ASTM Designation: E 29).

Property	Rounded-Off Unit for Observed or Calculated Value
Chemical Composition	Nearest unit in the last right-hand place of figures

Standard Weights

15. The standard weights for tubes of various outside diameters and thicknesses are prescribed in Table I.

Weight and Dimension Tolerances (Note 3)

16. (*a*) *Weight.*—The weight of the tubes shall not vary more than 5 per cent from that specified in Section 15.

(*b*) *Diameter.*—The finished tubes shall be circular within 0.02 in., and the mean outside diameter shall not vary more than 0.015 in. from the size ordered.

(*c*) *Thickness.*—The thickness at any point shall not vary more than 10 per cent from that specified.

(*d*) *Length.*—The length shall not be less, but may be $\frac{1}{8}$ in. more than that ordered.

NOTE 3.—For the purpose of determining conformance with the dimensional requirements prescribed in this specification, any measured value outside the specified limiting values for any dimension may be cause for rejection.

Workmanship and Finish

17. The finished tubes shall be free from injurious defects and distortion and shall have a workmanlike finish.

Marking

18. The name or brand of the manufacturer, and "tested at 750 psi" shall be legibly stenciled on each tube.

Inspection

19. The manufacturer shall afford the inspector, without charge, all reasonable facilities to satisfy him that the tubes are being furnished in accordance with this specification. All tests (except check analysis) and inspection shall be made at the place of manufacture prior to shipment, unless otherwise specified, and shall be so conducted as not to interfere unnecessarily with the operation of the works.

TABLE I.—STANDARD WEIGHTS OF COPPER BOILER TUBES.

Thickness		Weight, lb per ft of length				
		Outside Diameter in.				
Bwg	in.	1½	1¾	2	2¼	2½
No. 13	0.095	1.624	1.913	2.202	2.491	2.779
No. 12	0.109	1.844	2.176	2.507	2.839	3.170
No. 11	0.120	2.015	2.380	2.744	3.109	3.474
No. 10	0.134	2.227	2.634	3.042	3.449	3.857
No. 9	0.148	2.434	2.884	3.334	3.785	4.235

Rejection

20. (*a*) Unless otherwise specified, any rejection based on chemical or physical tests made in accordance with this specification shall be reported to the manufacturer within five working days from the receipt of samples by the purchaser.

(*b*) Tubes when inserted in the boiler shall stand expanding and bending without cracking or showing flaws. Tubes which fail in this manner will be rejected, and the manufacturer shall be notified.

Rehearing

21. Samples tested in accordance with Section 5 that represent rejected tubes, shall be preserved for two weeks from the date of the test report. In case of dissatisfaction with the results of the tests, the manufacturer may make claim for a rehearing within that time.

SPECIFICATION FOR SEAMLESS COPPER PIPE, STANDARD SIZES

SB-42

(IDENTICAL WITH ASTM SPECIFICATION B 42-58)

Scope

1. This specification covers seamless copper pipe in all standard pipe sizes, both regular and extra-strong, suitable for use in plumbing, boiler feed lines, and for similar purposes. The copper will normally be of the types DHP, DLP or OF of the Classification of Coppers (ASTM Designation: B 224).

General Requirements

2. Material furnished under this specification shall conform to the applicable requirements of the current edition of the Specification for General Requirements for Wrought Seamless Copper and Copper-Alloy Pipe and Tube (ASTM Designation: B 251).

Basis of Purchase

3. Orders for material under this specification shall include the following information:

(*1*) Temper (Section 5),

(*2*) Pipe size, regular or extra-strong (Section 10(*b*)),

(*3*) Length (Section 10(*e*)),

(*4*) Total length of each size, and

(*5*) If material is required to meet ASME Code (Section 5(*a*)).

Chemical Composition

4. The material shall conform to the following requirements as to chemical composition:

Copper,[a] min, per cent	99.90
Phosphorus, max, per cent	0.040

[a] Silver counting as copper.

Temper

5. (*a*) All pipe shall normally be furnished in the drawn temper.

NOTE.—Drawn temper pipe specified to meet requirements of the ASME Boiler and Pressure Vessel Code shall have tensile properties as follows:

Pipe Size Nominal, in.	Tensile Strength, min, psi	Yield Strength,[a] min, psi
1/8 to 2, incl.	45 000	40 000
2 1/2 to 12, incl.	36 000	30 000

[a] At 0.5 per cent extension under load.

(*b*) When pipe is required for bending, it shall be so specified in the purchase order, and the pipe shall be furnished in the temper agreed upon between the manufacturer and the purchaser.

Expansion Test

6. (*a*) Specimens selected for test shall, after annealing, withstand an expansion of 25 per cent of the inside diameter when expanded by a tapered pin having a 60-deg included angle. The expanded tube shall show no cracking or rupture visible to the unaided eye.

(*b*) As an alternate to the expansion test for pipe over 4 in. in diameter in the annealed condition, a section 4 in. in length shall be cut from the end of one of the lengths for a flattening test. This 4-in. specimen shall be flattened so that a gage set at three times the wall thickness will pass over the pipe freely throughout the flattened part. The pipe so tested shall develop no cracks or flaws visible to the unaided eye as a result of this test. In making the flattening test the elements shall be slowly flattened by one stroke of the press.

Bending Properties

7. In the case of pipe required for bending, annealed full sections of the pipe shall stand being bent cold through 180 deg around a pin the diameter of which is one and one-half times the inside diameter of the pipe, without cracking on the outside of the bent portion. This test shall apply only to sizes 2 in. and under in outside diameter.

Microscopic Examination

8. The pipe shall be made from copper that is free of cuprous oxide as determined by microscopic examination at a 75 × magnification. When DHP copper is supplied, microscopic examination for cuprous oxide is not required.

Hydrostatic Test

9. (*a*) For the purpose of hydrostatic testing only, a number of lengths of pipe equivalent to 0.2 per cent of the shipment shall be selected at random for the test prescribed in Paragraph (*b*).

(*b*) Each length selected in accordance with Paragraph (*a*) shall stand, without showing weakness or defects, an internal hydrostatic pressure sufficient to subject the material to a fiber stress of 6000 psi, determined by the following formula for thin hollow cylinders under tension. The pipe need not be tested at a hydrostatic pressure of over 1000 psi unless so specified. At the option of the manufacturer, annealed pipe with wall thicknesses up to 0.083 in. inclusive may be tested in drawn temper, prior to annealing

$$P = 2\frac{tS}{D}$$

where:

P = pressure in pounds per square inch,
t = thickness of pipe wall in inches,
D = outside diameter of the pipe in inches, and
S = allowable stress of the material = 6000 psi.

Dimensions, Weights, and Tolerances

10. (*a*) The dimensions, weights, and tolerances for material covered by this specification shall be as prescribed in the current edition of ASTM Specification B 251, with particular reference to Section 8 and the following tables of that specification:

(*b*) *Standard Dimensions and Weights.*—See Section 8(*b*), Table I.

(*c*) *Weight Tolerances.*—See Section 8(*c*), Table III.

(*d*) *Wall Thickness Tolerances.*—See Section 8(*d*), Table IV.

(*e*) *Length and Length Tolerances.*—See Section 8(*g*) and (*h*).

(*f*) *Roundness.*—See Section 8(*f*).

(*g*) *Squareness of Cut.*—See Section 8(*i*).

SPECIFICATION FOR SEAMLESS RED BRASS PIPE, STANDARD SIZES

SB-43

(IDENTICAL WITH ASTM SPECIFICATION B 43-58)

Scope

1. This specification covers seamless red brass pipe in all standard pipe sizes, both regular and extra-strong, suitable for use in plumbing, boiler feed lines, and for similar purposes.

General Requirements

2. Material furnished under this specification shall conform to the applicable requirements of the current edition of the Specification for General Requirements for Wrought Seamless Copper and Copper-Alloy Pipe and Tube (ASTM Designation: B 251).

Basis of Purchase

3. Orders for material under this specification shall include the following information:

(*1*) Temper (Section 5),

(*2*) Pipe size, regular or extra strong (Section 10(*b*)),

(*3*) Length (Section 10(*e*)), and

(*4*) Total length of each size.

Chemical Composition

4. The material shall conform to the following requirements as to chemical composition:

Copper, per cent	84.0 to 86.0
Lead, max, per cent	0.06
Iron, max, per cent	0.05
Zinc	remainder

Temper

5. All pipe shall normally be furnished in the annealed condition. The degree of anneal shall be sufficient to show complete recrystallization and to enable the pipe to meet the test requirements prescribed in this specification. The pipe may be furnished in drawn temper instead of the annealed condition, if agreed upon between the manufacturer and the purchaser.

NOTE.—Material specified to meet requirements of the ASME Boiler and Pressure Vessel Code shall have in the annealed condition a minimum tensile strength of 40,000 psi and a minimum yield strength of 12,000 psi at 0.5 per cent extension under load.

Expansion Test

6. (*a*) Specimens selected for test shall, after annealing, withstand an expansion of 25 per cent of the inside diameter, without cracking, when expanded by a tapered pin having a 60-deg included angle. The expanded tube shall show no cracking or rupture visible to the unaided eye.

(*b*) As an alternate to the expansion test for pipe over 4 in. in diameter in the annealed condition, a section 4 in. in length shall be cut from the end of one of the lengths for a flattening test. This 4-in. specimen shall be flattened so that a gage set at three times the wall thickness will pass over the pipe freely throughout the flattened part. The pipe so tested shall develop no cracks or flaws visible to the unaided eye as a result of this test. In making the flattening test the elements shall be slowly flattened by one stroke of the press.

Mercurous Nitrate Test

7. The test specimens, cut 6 in. in length, shall, after proper cleaning, withstand an immersion for 30 min without cracking in the standard mercurous nitrate solution prescribed in the Method of Mercurous Nitrate Test for Copper and Copper Alloys (ASTM Designation: B 154). Immediately after removal from the solution, the specimen shall be wiped free of excess mercury and examined for cracks.

Bending Properties

8. In the case of pipe required for bending, annealed full sections of the pipe shall stand being bent cold through 180 deg around a pin the diameter of which is one and one-half times the inside diameter of the pipe, without cracking on the outside of the bent portion. This test shall apply only to sizes 2 in. and under in outside diameter.

Hydrostatic Test

9. (*a*) For the purpose of hydrostatic testing only, a number of lengths of pipe equivalent to 0.2 per cent of the shipment shall be selected at random for the test prescribed in Paragraph (*b*).

(*b*) Each length selected in accordance with Paragraph (*a*) shall stand, without showing weakness or defects, an internal hydrostatic pressure sufficient to subject the material to a fiber stress of 7000 psi, determined by the following formula for thin hollow cylinders under tension. The pipe need not be tested at a hydrostatic pressure of over 1000 psi unless so specified.

$$P = 2\frac{tS}{D}$$

where:

P = pressure in pounds per square inch,
t = thickness of pipe wall in inches,
D = outside diameter of the pipe in inches, and
S = allowable stress of the material = 7000 psi.

Dimensions, Weights, and Tolerances

10. (*a*) The dimensions, weights, and tolerances for material covered by this specification shall be as prescribed in the current edition of ASTM Specification B 251, with particular reference to Section 8 and the following tables of that specification:

(*b*) *Standard Dimensions and Weights.*—See Section 8(*b*), Table I.

(*c*) *Weight Tolerances.*—See Section 8(*c*), Table III.

(*d*) *Wall Thickness Tolerances.*—See Section 8(*d*), Table IV.

(*e*) *Length and Length Tolerances.*—See Section 8(*g*) and (*h*).

(*f*) *Roundness.*—See Section 8(*f*).

(*g*) *Squareness of Cut.*—See Section 8(*i*).

SPECIFICATION FOR STEAM OR VALVE BRONZE CASTINGS

SB-61

(IDENTICAL WITH ASTM SPECIFICATION B 61-52)

Scope

1. This specification covers a high-grade steam metal or valve bronze alloy used for component castings of valves, flanges and fittings.

Basis of Purchase

2. This specification covers castings used in products manufactured in advance and supplied for sale from stock by the manufacturer, jobber or other dealer. Orders for such product shall prescribe the alloy by specification number, together with a request for certification as may be desired (Sections 3, 5, 9 and 12).

Chemical Composition

3. The alloy shall conform to the requirements as to chemical composition prescribed in Table I.

Chemical Analysis

4. (*a*) Not less than two chemical analyses shall be made from different heats, from each day's melt.[3]

(*b*) The sample for chemical analysis shall be taken by drilling or cutting the chemical test coupon in such a manner as to be representative of the entire cross-section. For purpose of analysis only, the chemical test coupon may consist either of a tension test coupon, or of a separate sand or chill cast coupon as may be desired.

Tensile Properties

5. The alloy shall conform to the requirements as to tensile properties prescribed in Table II.

Test Coupons and Specimens

6. The tension test coupons and specimens for tension tests shall be prepared in accordance with the Tentative Recommended Practice for Tension Test Specimens for Copper-Base Alloys for Sand Castings (ASTM Designation: B 208).

Number of Tests

7. (*a*) Not less than two tension tests, from different heats, shall be made from each day's melt.[3]

(*b*) If any test specimen shows defective machining or reveals casting defects, it may be discarded and replaced by another specimen.

Significance of Numerical Limits

8. For purposes of determining compliance with the specified limits for requirements of the properties listed in the following table, an observed value or a calculated value shall be rounded off as indicated in accordance with the rounding-off method of the Recommended Practices for Designating Significant Places in Specified Limiting Values (ASTM Designation: E 29).

Property	Rounded-Off Unit for Observed or Calculated Value
Chemical composition	Nearest unit in the last right-hand place of figures
Tensile strength Yield strength	Nearest 1000 psi
Elongation:	
5 per cent and over	Nearest 1 per cent

Hydrostatic Test

9. Castings, as assembled component parts of valves, flanges, or fittings, shall conform to such requirements as to pressure tests as may be prescribed by codes applying to the products under consideration.

Workmanship and Finish

10. (*a*) The castings shall be free from injurious blowholes, porosity, shrinkage defects, cracks, or other injurious defects. They shall be smooth and well cleaned.

(*b*) Pressure castings shall not be plugged, welded, burned in or impregnated.

(*c*) Wall thicknesses and sections shall meet or exceed the minimum requirements of applicable codes.

Marking

11. Valves, flanges, and fittings shall be marked in accordance with the latest revision of the Standard Marking System for Valves, Fittings, Flanges, and Unions (No. SP-25) of the Manufacturers Standardization Society of the Valve and Fittings Industry, and in such position as not to injure the usefulness of the casting.

Certification

12. (*a*) Records of tension test results and chemical analyses shall be systematically made and maintained and shall be

TABLE I.—CHEMICAL REQUIREMENTS.

NOTE.—Analysis shall regularly be made only for the elements designated in boldface type. However, the presence of the other named elements outside of the limits specified in this table constitute cause for rejection of the castings.

	Minimum	Maximum
Copper, per cent[a]	86.0	90.0
Tin, per cent	5.5	6.5
Lead, per cent	1.0	2.0
Zinc, per cent	3.0	5.0
Nickel, per cent	...	1.0
Iron, per cent	...	0.25
Phosphorus, per cent	...	0.05

[a] In determining compliance with the requirement as to minimum copper content, copper may be computed as copper plus nickel, to the nickel limit prescribed.

TABLE II.—TENSILE REQUIREMENTS.

Tensile strength, min., psi	34 000
Yield strength, min., psi[a]	16 000
Elongation in 2 in., min., per cent	22

[a] Yield strength shall be determined as the stress producing an elongation under load of 0.5 per cent, that is, 0.01 in. in a gage length of 2 in.

[3] A day's melt shall mean a normal day, one shift, not to exceed 10-hr over-all melting period. When two or more shifts are used each shift shall be considered the equivalent of a day's melt.

the basis for certification. In lieu of the manufacturer's certification and upon written request on the purchase order by the purchaser these records may be examined by the purchaser or his accredited representative, upon the manufacturer's premises.

(*b*) Upon written request on the purchase order, the purchaser or his accredited representative shall have the right of entry to foundries and testing laboratories to assure himself that the facilities and procedures of the manufacturer of the component castings are suitable as a basis for production of castings and for preparation of certification as described in Paragraph (*a*).

(*c*) Component-part alloy castings as made to this specification are manufactured in advance and supplied from stock. The manufacturer therefore maintains a general quality certification of all castings, without specific record or date of cast of a specific component part. When component parts are required to specific dates or heats, a supplementary agreement on the purchase order is necessary between the purchaser and the manufacturer.

Rejection

13. Castings that show injurious defects revealed by machining operations subsequent to acceptance may be rejected, and if rejected, the foundry shall be notified within 30 days. The full weight of the original material rejected shall be returned to the foundry. The foundry shall not be responsible for the costs of machining defective castings.

SPECIFICATION FOR COMPOSITION BRASS OR OUNCE METAL CASTINGS

SB-62

(IDENTICAL WITH ASTM SPECIFICATION B 62-52)

Scope

1. This specification covers an alloy having a composition of copper, tin, lead and zinc, used for component castings of valves, flanges and fittings. The common trade name of this alloy is 85-5-5-5.

Basis of Purchase

2. This specification covers castings used in products manufactured in advance and supplied for sale from stock by the manufacturer, jobber or other dealer. Orders for such product shall prescribe the alloy by specification number, together with a request for certification as may be desired. (See Sections 3, 5, 9 and 12.)

Chemical Composition

3. The alloy shall conform to the requirements as to chemical composition prescribed in Table I.

Chemical Analysis

4. (*a*) Not less than two chemical analyses shall be made from different heats, from each day's melt.[3]

(*b*) The sample for chemical analysis shall be taken by drilling or cutting the chemical test coupon in such a manner as to be representative of the entire cross-section. For purpose of analysis only, the chemical test coupon may consist either of a tension test coupon, or of a separate sand or chill cast coupon as may be desired.

Tensile Properties

5. The alloy shall conform to the requirements as to tensile properties prescribed in Table II.

[3] A day's melt shall mean a normal day, one shift, not to exceed 10-hr over-all melting period. When two or more shifts are used each shift shall be considered the equivalent of a day's melt.

Test Coupons and Specimens

6. The tension test coupons and specimens for tension tests shall be prepared in accordance with the Tentative Recommended Practice for Tension Test Specimens for Copper-Base Alloys for Sand Castings (ASTM Designation: B 208).

Number of Tests

7. (*a*) Not less than two tension tests, from different heats, shall be made from each day's melt.[3]

(*b*) If any test specimen shows defective machining or reveals casting defects, it may be discarded and replaced by another specimen.

Significance of Numerical Limits

8. For purposes of determining compliance with the specified limits for requirements of the properties listed in the following table, an observed value or a calculated value shall be rounded off as indicated in accordance with the rounding-off method of the Recommended Practices for Designating Significant Places in Specified Limiting Values (ASTM Designation: E 29).

Property	Roupded-Off Unit for Observed or Calculated Value
Chemical composition	Nearest unit in the last right-hand place of figures
Tensile strength Yield strength	Nearest 1000 psi
Elongation:	
5 per cent and over	Nearest 1 per cent

Hydrostatic Test

9. Castings, as assembled component parts of valves, flanges, or fittings, shall conform to such requirements as to pressure tests as may be prescribed by codes applying to the products under consideration.

Workmanship and Finish

10. (*a*) The castings shall be free from injurious blowholes, porosity, shrinkage defects, cracks, or other injurious defects. They shall be smooth and well cleaned.

(*b*) Pressure castings shall not be plugged, welded, burned in or impregnated.

(*c*) Wall thicknesses and sections shall meet or exceed the minimum requirements of applicable codes.

Marking

11. Valves, flanges, and fittings shall be marked in accordance with the latest revision of the Standard Marking System for Valves, Fittings, Flanges, and Unions (No. SP-25) of the Manufacturers Standardization Society of the Valve and Fittings Industry, and in such position as not to injure the usefulness of the casting.

TABLE I.—CHEMICAL REQUIREMENTS.

NOTE.—Analysis shall regularly be made only for the elements designated in boldface type. However, the presence of the other named elements outside of the limits specified in this table constitute cause for rejection of the castings.

	Minimum	Desired	Maximum
Copper, per cent[a]	**84.0**	85.0	**86.0**
Tin, per cent	**4.0**	5.0	**6.0**
Lead, per cent	**4.0**	5.0	**6.0**
Zinc, per cent	4.0	5.0	6.0
Nickel, per cent	...	...	**1.0**
Iron, per cent	...	...	0.30
Phosphorus, per cent	...	...	0.05

[a] In determining compliance with minimum copper, copper may be computed as copper plus nickel, to nickel limit prescribed.

TABLE II.—TENSILE REQUIREMENTS.

Tensile strength, min., psi	30 000
Yield strength, min., psi[a]	14 000
Elongation in 2 in., min., per cent	20

[a] Yield strength shall be determined as the stress producing an elongation under load of 0.5 per cent, that is, 0.01 in. in a gage length of 2 in.

Certification

12. (*a*) Records of tension test results and chemical analyses shall be systematically made and maintained and shall be the basis for certification. In lieu of the manufacturer's certification and upon written request on the purchase order by the purchaser these records may be examined by the purchaser or his accredited representative, upon the manufacturer's premises.

(*b*) Upon written request on the purchase order, the purchaser or his accredited representative shall have the right of entry to foundries and testing laboratories to assure himself that the facilities and procedures of the manufacturer of the component castings are suitable as a basis for production of castings and for preparation of certification as described in Paragraph (*a*).

(*c*) Component-part alloy castings as made to this specification are manufactured in advance and supplied from stock. The manufacturer therefore maintains a general quality certification of all castings, without specific record or date of cast of a specific component part. When component parts are required to specific dates or heats, a supplementary agreement on the purchase order is necessary between the purchaser and the manufacturer.

Rejection

13. Castings that show injurious defects revealed by machining operations subsequent to acceptance may be rejected, and if rejected, the foundry shall be notified within 30 days. The full weight of the original material rejected shall be returned to the foundry. The foundry shall not be responsible for the costs of machining defective castings.

SPECIFICATION FOR SEAMLESS COPPER TUBE

SB-75

(IDENTICAL WITH ASTM SPECIFICATION B 75-61)

Scope

1. This specification covers seamless copper, round and rectangular including square tube suitable for general engineering purposes. Four types may be specified as indicated below.[3] Unless otherwise specified, any one of these types may be supplied.

Type DLP. —Phosphorized copper, low residual phosphorus.

Type DHP. —Phosphorized copper, high residual phosphorus.

Type DPA.—Phosphorized arsenical copper, high residual phosphorus.

Type OF. —Oxygen-free copper without residual metallic deoxidants.

NOTE 1.—When tube is to be welded, the phosphorus deoxidized types should be specified.

Ordering Information

2. Orders for material under this specification shall include the following information:

(*1*) Type of copper, if required (Sections 1 and 4),
(*2*) Temper (Section 5),
(*3*) Whether tension tests are required (for drawn tempers only) (see Section 7),
(*4*) Dimensions: Diameter or distance between parallel surfaces, and wall thickness (Section 14(*b*) and (*c*)),
(*5*) Length (Section 14(*d*)),
(*6*) How furnished: straight or coils,
(*7*) Specify electrical resistivity if required (Section 11),
(*8*) Embrittlement test (Section 13), and
(*9*) Total length of each size.

[3] Types DLP, DHP, DPA, and OF, formerly designated types A, B, C, and D, respectively, are classified in the Classification of Coppers (ASTM Designation: B 224).

General Requirements

3. Material furnished under this specification shall conform to the applicable requirements of the current edition of the Specification for General Requirements for Wrought Seamless Copper and Copper-Alloy Pipe and Tube (ASTM Designation: B 251).

TABLE I.—CHEMICAL REQUIREMENTS.

Type	Copper,[a] min, per cent	Phosphorus, per cent		Arsenic, per cent	
		Min	Max	Min	Max
DLP	99.90	0.004	0.012	....	....
DHP	99.90	0.015	0.040	....	....
DPA	99.40	0.015	0.040	0.15	0.50
OF	99.92	....	....	....	....

[a] Silver counting as copper.

Chemical Composition

4. The material shall conform to the requirements as to chemical composition prescribed in Table I.

Tempers of Drawn Tube

5. The tempers of drawn tube shall be designated as light-drawn, drawn, and hard-drawn (Table II). Light-drawn (bending) temper is used only when a tube of some stiffness but yet capable of being bent is needed. Drawn temper is for general purposes and is most commonly used where there is no specific requirement for high strength on the one hand or for bending qualities on the other. Hard-drawn temper is used only where there is need for a tube as strong as is commercially feasible for the sizes indicated. For any combination of diameter and wall thickness not covered under hard-drawn temper, the values given for drawn temper shall be used. Rectangular including square tubes shall normally be supplied only in drawn (general purpose) temper. When there is a need for light-drawn or hard-drawn tempers these may be supplied as agreed upon between the manufacturer and the purchaser.

TABLE II.—MECHANICAL PROPERTY REQUIREMENTS OF DRAWN TEMPER TUBE.

Temper	Outside Diameter, or Major Distance between Outside Parallel Surfaces, in.	Wall Thickness, in.	Rockwell Hardness[a]		Tensile Strength, psi
			Scale	Hardness	
Light-drawn[b]	all	all	30T	30 to 60	36 000 to 47 000
Drawn (General Purpose)	all	all	30T	30 min	36 000 min
Hard-drawn[b]	up to 1	0.020 to 0.120 incl	30T	55 min	45 000 min
	over 1 to 2 incl	0.035 to 0.180 incl			
	over 2 to 4 incl	0.060 to 0.250 incl			

[a] Rockwell hardness values shall apply only to tubes having a wall thickness of 0.020 in. or over, to round tubes having an inside diameter of $\frac{5}{16}$ in. or over, and to rectangular including square tubes having an inside major distance between parallel surfaces of $\frac{3}{16}$ in. or over. Rockwell hardness tests shall be made on the inside surface of the tube. When suitable equipment is not available for determining the specified Rockwell hardness, other Rockwell scales and values may be specified subject to agreement between purchaser and supplier.

[b] Light-drawn and hard-drawn tempers are normally available in round tube only

Tempers of Annealed Tube

6. The tempers of annealed tube shall be designated as light anneal and soft anneal (Table III).

Mechanical Properties of Drawn Temper Tube

7. Drawn temper tube shall conform to the mechanical properties prescribed in Table II. Tension tests are required for tubes with a wall thickness under 0.020 in. and for round tubes having an inside diameter under $\frac{5}{16}$ in., and for rectangular including square tubes having a major distance between inside parallel surfaces under $\frac{3}{16}$ in. The tension test for other sizes of tube need not be made except when indicated by the purchaser at the time of placing the order. A convenient method of indicating that the tension test is required is to state that "Test procedure 'T' is required." (See Section 3(*3*).) Where agreement on the Rockwell hardness tests cannot be reached the tensile strength requirements of Table II shall be the basis for acceptance or rejection.

Mechanical Properties of Annealed Temper Tube

8. Annealed temper tube shall conform to the grain size and Rockwell hardness limits prescribed in Table III.

NOTE 2.—Material specified to meet requirements of the ASME Boiler and Pressure Vessel Code shall have physical properties as follows:

Temper	Tensile Strength, psi	Yield Strength, min, psi[a]
Annealed	30 000 min	9 000
Light-drawn	36 000 to 47 000	30 000
Hard-drawn	45 000 min	40 000

[a] At 0.5 per cent extension under load.

Expansion Test for Round Tube

9. (*a*) The annealed material shall be capable of being expanded on a hardened and ground, tapered steel pin having an included angle of 60 deg, to the following amounts:

Outside Diameter, in.	Expansion of Outside Diameter per cent
$\frac{3}{4}$ and under	40
Over $\frac{3}{4}$	30

TABLE III.—MECHANICAL PROPERTY REQUIREMENTS OF ANNEALED TEMPER TUBE.

Annealed Temper	Outside Diameter, or Major Distance Between Outside Parallel Surfaces, in.	Wall Thickness, in.	Rockwell Hardness[a]		Average Grain Size, mm
			Scale	Value	
Soft anneal	all	0.015 to 0.035	15T	60 max	0.040 min
		0.035 and over	F	50 max	0.040 min
Light anneal	all	0.015 to 0.035	15T	65 max	0.040 max
		0.035 and over	F	55 max	0.040 max

[a] Rockwell hardness values shall apply only to tubes having a wall thickness of 0.015 in. or over, to round tubes having an inside diameter of $\frac{5}{16}$ in. or over, and to rectangular including square tubes having an inside major distance between parallel surfaces of $\frac{3}{16}$ in. or over. For all other tube no Rockwell values shall apply. Rockwell hardness tests shall be made on the inside surface of the tube. When suitable equipment is not available for determining the specified Rockwell hardness other Rockwell scales and values may be specified subject to agreement between purchaser and supplier.

The expanded tube shall show no cracking or rupture visible to the unaided eye.

(*b*) As an alternate to the expansion test for tube over 4 in. in diameter in the annealed condition, a section 4 in. in length shall be cut from the end of one of the lengths for a flattening test. This 4-in. test specimen shall be flattened so that a gage set at three times the wall thickness will pass over the tube freely throughout the flattened part. The tube so tested shall develop no cracks or flaws visible to the unaided eye as a result of this test. In making the flattening test the elements shall be slowly flattened by one stroke of the press.

Hydrostatic Test for Round Tube

10. (*a*) For the purpose of hydrostatic testing only, a number of lengths equivalent to 0.2 per cent of the shipment shall be selected at random for the following test.

(*b*) Except as provided in Paragraphs (*c*) to (*e*), each tube selected in accordance with Paragraph (*a*) shall stand, without showing weakness or defects, an internal hydrostatic pressure sufficient to subject the material to a fiber stress of 6000 psi, determined by the following formula for thin hollow cylinders under tension. The tube need not be tested at a hydrostatic pressure of over 1000 psi unless so specified.

$$P = \frac{2tS}{D}$$

where:

P = hydrostatic pressure in pounds per square inch,
t = thickness of tube wall in inches,
D = outside diameter of the tube in inches, and
S = allowable stress of the material = 6000 psi.

(*c*) For annealed tube in straight lengths with wall thicknesses up to 0.083 in., inclusive, the hydrostatic test may be made at the option of the manufacturer in the hard-drawn condition prior to annealing.

(*d*) For tube in straight lengths, hard drawn or annealed, less than $\frac{1}{2}$ in. in outside diameter and less than 0.060 in. in wall thickness, the test may be made at the option of the manufacturer by pneumatically testing at not less than 60 psi air pressure while immersed in water.

(*e*) For tube furnished in coils, the manufacturer may have the option of testing by either of the following methods:

(*1*) Hydrostatically testing the tube as provided in Paragraph (*b*) in straight lengths as cold drawn prior to both final coiling and annealing,

(*2*) Pneumatically testing the coiled tube either before or after annealing, at not less than 60 psi air pressure while immersed in water.

Electrical Resistivity

11. Types DLP and OF are suitable for electrical conductors. When ordered for this purpose, the electrical resistivity of representative samples of types DLP and OF shall not exceed the following limits when tested at a temperature of 20 C (68 F):

Condition	Electrical Resistivity, max, ohm-gram/meter²	
	OF Copper	DLP Copper
Annealed tempers	0.15328	0.15614
Drawn tempers	0.15737	0.15940

NOTE 3.—The International Annealed Copper Standard electrical conductivity equivalents are as follows:

Electrical Resistivity, ohm-gram/meter²	Conductivity, per cent
0.15328	100.00
0.15614	98.16
0.15737	97.40
0.15940	96.16

Microscopic Examination

12. Samples of types DLP and OF copper shall be free from cuprous oxide as determined by microscopic examination at a 75× magnification. When DHP or DPA copper is supplied, microscopic examination for cuprous oxide is not required.

TABLE IV.—COIL LENGTH TOLERANCES (SPECIFIC LENGTHS).

Outside Diameter or Major Distance Between Parallel Outside Surfaces, in.	Tolerances, in., All Plus, for Nominal Lengths in Feet	
	Up to 50, incl	Over 50 to 100, incl
Up to 2, incl	12	24

Embrittlement Test

13. It is to be expected that samples of types DLP, DHP, DPA, and OF will pass the following embrittlement test, although the actual performance of the test is not mandatory under the terms of this specification unless definitely specified: Suitable test specimens shall be heated to a temperature of 800 to 875 C for a period of 20 min in a furnace containing an atmosphere of hydrogen. After their removal from the furnace the specimens shall be polished, etched if desired, and examined under a microscope at a magnification of 75 to 200 diameters, inclusive. The specimens shall not show gassing or open grain structure characteristic of embrittlement.

TABLE V.—COIL LENGTH TOLERANCES (MILL LENGTHS).

(Applicable only to full length pieces)

Outside Diameter or Major Distance Between Parallel Outside Surfaces, in.	Tolerances, per cent, for Nominal Lengths in Feet	
	Up to 100, incl	Over 100 to 2000, incl
Up to 1, incl	5[a] or 2 ft, whichever is greater	10[a]
Over 1 to 2, incl	5[a] or 2 ft, whichever is greater	no tolerances established

[a] Expressed to the nearest foot.

TABLE VI.—SCHEDULE OF MILL LENGTHS WITH ENDS IN COILS.

Outside Diameter or Major Distance Between Parallel Outside Surfaces, in.	Nominal Length, ft	Shortest Permissible Length, per cent of Nominal Length	Maximum Permissible Weight of Ends, per cent of Lot Weight
Up to 1, incl	Up to 100, incl	70[a]	10
Over 1 to 2, incl	Up to 100, incl	60[a]	20
Up to 1, incl	Over 100 to 2000, incl	50	50[b]

[a] Expressed to the nearest foot.

[b] Short pieces may be included as follows: up to 10 per cent of lot weight between 50 ft and one-quarter of full length; and up to 40 per cent between one-quarter and full length.

Dimensions and Tolerances

14. (*a*) The dimensions and tolerances for material covered by this specification shall be as prescribed in the current edition of ASTM Specification B 251, with particular reference to Section 8 and the following tables of that specification:

(*b*) *Wall Thickness Tolerances.*—See Section 8(*d*), Tables V and XI.

(*c*) *Tolerances for Diameter or Distance Between Parallel Surfaces.*—See Section 8(*e*), Tables VI and XII.

(*d*) *Length Tolerances.*—For straight lengths see Section 8(*h*), Tables VII and VIII For tube in coils see Tables IV, V, and VI of this specification.

(*e*) *Roundness.*—See Section 8(*f*).

(*f*) *Squareness of Cut.*—See Section 8(*i*).

(*g*) *Straightness Tolerances.*—For round tubes see Section 8(*j*)(*1*), Table X. For rectangular including square tubes see Section 8(*j*)(*2*).

(*h*) *Corner Radius for Rectangular Including Square Tubes.*—See Section 8(*k*), Table XIII.

(*i*) *Twist Tolerances for Rectangular and Square Tubes.*—See Section 8(*l*).

SPECIFICATION FOR COPPER-SILICON ALLOY PLATE AND SHEET FOR PRESSURE VESSELS

SB-96

(IDENTICAL WITH ASTM SPECIFICATION B 96-61)

Scope

1. This specification covers rolled and annealed copper-silicon alloy plate and sheet for pressure vessels. The commercially available alloys are shown in the Appendix (Table III).

Basis of Purchase

2. Orders for material under this specification shall include the following information:

(*1*) Alloy (Sections 4, Tables I and III),

(*2*) Dimensions: length, width, thickness,

(*3*) Finish (Section 12 (*a*)), and

(*4*) Weight: total for each size.

Manufacture

3. (*a*) The material shall be of such quality and purity that the finished product shall have the properties and characteristics prescribed in this specification.

(*b*) The plate and sheet shall be manufactured by hot rolling and annealing or by cold rolling and annealing.

Chemical Composition

4. The plate and sheet shall conform to the requirements as to chemical composition prescribed in Table I.

Sampling for Chemical Analysis

5. Samples for chemical analysis shall be taken in accordance with the Method of Sampling Wrought Non-Ferrous Metals and Alloys for Determination of Chemical Composition (ASTM Designation: E 55). The lot size, portion size, and selection of pieces shall be as follows:

TABLE I.—CHEMICAL REQUIREMENTS.

	Alloy A	Alloy C
Copper, min, per cent	94.8	91.0
Silicon, per cent	2.8 to 3.8	2.0 to 3.0
One or more of the following elements may be present within the limits specified below, subject to limits of the specific alloys as given in the Appendix (Table III):		
Manganese, max, per cent	1.5	....
Zinc, max, per cent	1.5	....
Iron, max, per cent	1.6	0.8
Lead, max, per cent	0.05	0.05
Nickel, max, per cent	0.6	0.6
Sum of above elements, min, per cent	99.5	99.5

Lot Size.—5000 lb or fraction thereof.

Portion Size.—Pieces from four individual lengths of finished product. If the lot consists of less than the number of lengths indicated in the portion size, a piece shall be taken from each individual length.

Minimum Weight of Composite Sample.—150 g divided into three equal parts.

Tensile Properties

6. The annealed plate and sheet shall conform to the following requirements as to tensile properties (values for Rockwell hardness and grain size are given for information only):

Tensile strength, psi	50 000 to 67 000
Yield strength, min, psi[a]	18 000
Elongation in 2 in., min, per cent	40
Rockwell hardness, F scale[b]	72 to 92
Grain size, max, mm[b]	0.110[c]

[a] Stress corresponding to 0.5 per cent strain.

[b] Hardness and grain size values given only as information.

[c] No minimum grain size is indicated, but all annealed material shall be fully recrystallized.

Tension test specimens shall be taken so that the longitudinal axis of such specimens is parallel to the direction of rolling.

Methods of Test and Chemical Analysis

7. The properties and chemical compositions enumerated in this specification shall, in case of disagreement, be determined in accordance with the following methods of the American Society for Testing Materials:

Test	ASTM Designation[a]
Chemical Analysis	E 54
Tension	E 8[b]
Grain Size	E 2, E 3, E 79
Rockwell Hardness	E 18

[a] These designations refer to the following methods of testing:

Methods for Chemical Analysis of Special Brasses and Bronzes (ASTM Designation: E 54),

Methods of Tension Testing of Metallic Materials (ASTM Designation: E 8),

Methods of Preparation of Micrographs of Metals and Alloys (ASTM Designation: E 2)

Methods of Preparation of Metallographic Specimens (ASTM Designation: E 3),

Methods for Estimating the Average Grain Size of Wrought Copper and Copper-Base Alloys (ASTM Designation: E 79, and

Methods of Test for Rockwell Hardness and Rockwell Superficial Hardness of Metallic Materials (ASTM Designation: E 18).

[b] The tension test specimen shall conform to the dimensions shown in Figs. 7 or 8 of Methods E 8.

Significance of Numerical Limits

8. For purposes of determining compliance with the specified limits for requirements of the properties listed in the following table, an observed value or a calculated value shall be rounded off as indicated in accordance with the rounding-off method of the Recommended Practices for Designating Significant Places in Specified Limiting Values (ASTM Designation: E 29):

TABLE II.—LOT WEIGHT TOLERANCES IN PERCENTAGE OF THEORETICAL WEIGHT—ALL PLUS.

Thickness, in.	Permissible Excess in Average Weight of Lots, Expressed in Percentage of Nominal Weights					
	48 in. and Under in Width	Over 48 to 60 in. in Width	Over 60 to 72 in. in Width	Over 72 to 96 in. in Width	Over 96 to 120 in. in Width	Over 120 to 132 in., incl, in Width
1/8 to 3/16	6.5	8	9	11	..	..
Over 3/16 to 1/4	6.5	8	9	11	12	..
Over 1/4 to 5/16	6.5	7.75	8.75	11	12	13
Over 5/16 to 3/8	6.25	7.5	8.5	11	12	13
Over 3/8 to 7/16	6	7.25	8.25	11	12	13
Over 7/16 to 1/2	6	7	8	10	11	12
Over 1/2 to 5/8	5.75	6.5	7.5	9	10	11
Over 5/8 to 3/4	5.5	6	7	8	9	10
Over 3/4 to 1	5	5	6.25	7	8	9
Over 1 to 2	3.5	4	5	6	7	8

Property	Rounded-Off Unit for Observed or Calculated Value
Chemical Composition, Hardness	Nearest unit in the last right-hand place of figures
Tensile Strength, Yield Strength	Nearest 1000 psi
Grain Size: Up to 0.055 mm, incl	Nearest multiple of 0.005 mm
Over 0.055 to 0.160 mm, incl	Nearest 0.01 mm
Elongation: 5 per cent and over	Nearest 1 per cent

Number of Tests

9. Unless otherwise specified, one tension test shall be made for each lot of 5000 lb or fraction thereof of each gage or thickness of plate and sheet in the shipment.

Minus Thickness Tolerance (Note)

10. The thickness of any plate or sheet shall not be more than 0.01 in. under the thickness specified.

NOTE.—For the purpose of determining conformance with the dimensional requirements prescribed in this specification, any measured value outside the specified limiting values for any dimension may be cause for rejection.

Dimensions, Weights, and Permissible Variations

11. (*a*) The weight of each lot of five or more plates or sheets of the same specified dimensions when ordered to thickness shall not vary from the nominal by more than the amount prescribed in Table II. The weight of any individual plate or sheet may vary from the nominal by not more than one third in excess of the tolerance prescribed in Table II. The tolerances of lots of less than five plates or sheets shall be governed by the tolerance of individual plates or sheets. For purposes of this specification, alloys A and C shall be considered to weigh 0.308 lb per cu in.

(*b*) Length tolerances for square sheared metal in all widths 120 in. and under for all lengths shall be $\pm\frac{1}{16}$ in. If tolerances are specified as all plus or all minus, double the values given.

(*c*) Length tolerances for sawed metal for all widths up to and including 120 in. shall be $\pm\frac{1}{4}$ in. If tolerances are specified as all plus or all minus, double the values given.

(*d*) Width tolerances for square sheared metal or sawed metal for widths up to and including 120 in. for all thickness, shall be $\pm\frac{1}{16}$ in. If tolerances are specified as all plus or all minus, double the values given.

Workmanship and Finish

12. (*a*) Copper-silicon alloy plate and sheet are regularly supplied in the following finishes:

Black.—After hot rolling retains all of the oxides.

Plain Pickled.—Sulfuric acid pickle only. Brick red color. Has cuprous and silicon oxides still adherent.

Specially Cleaned.—Commercially free of all oxides. Has golden color of the alloy.

Sand Blasted.—Commercially free of all oxides. Has dull gray color.

(*b*) The plate and sheet shall be free from injurious defects. The fracture shall be uniform in color and grain throughout.

Marking

13. The name or brand of the manufacturer and the manufacturer's lot identification number shall be legibly stamped or stenciled on each finished plate and sheet in two places not less than 12 in. from the edges. If the plate and sheet are too small to locate the marking as above, the marking may be placed near the center of the plate and sheet. In the case of butt straps, the marking may be placed 12 in. from the end.

Inspection

14. The manufacturer shall afford the inspector representing the purchaser all reasonable facilities, without charge, to satisfy him that the material is being furnished in accordance with this specification.

Rejection

15. Material that fails to conform to this specification will be rejected, and the manufacturer shall be notified within 30 days after receipt of the material.

APPENDIX

For the information of those using this specification the commercially available specific alloys are listed in Table III together with the manufacturers' published chemical composition limits. The alloy designations listed below are for convenience only and have no commercial significance.

TABLE III.—COMMERCIALLY AVAILABLE COPPER-SILICON ALLOY PLATE AND SHEET FOR PRESSURE VESSELS.

NOTE.—Analysis shall regularly be made only for the elements specifically mentioned in this table for a designated alloy. If the presence of other elements is suspected, or indicated in the course of routine analysis, further analysis shall be made either chemically or spectrographically to determine that the total of these other elements is not in excess of 0.50 per cent.

Alloy Number	Silicon, per cent	Iron, per cent	Manganese, per cent	Zinc, per cent	Lead, max, per cent	Aluminum, max, per cent	Nickel, max, per cent	Copper plus Elements with Specific Limits, min, per cent
Alloy A								
A-1	2.8 to 3.5	0.5 to 1.2	.....	.....	0.05	.....	0.6	99.5
A-2	2.8 to 3.2	0.2 max	.....	.....	0.05	.....	.....	99.5
A-4	2.8 to 3.2	0.2 max	.....	0.5 to 1.5	0.05	.....	.....	99.5
A-5	2.8 to 3.2	.....	0.8 to 1.2	.....	0.05	.....	.....	99.5
A-6	2.8 to 3.5	0.8 to 1.6	.....	.....	0.05	.....	.....	99.5
A-7	2.8 to 3.6	0.25 max	0.50 to 1.35	.....	0.05	.....	.....	99.5
A-8	3.15 to 3.8	0.50 max	0.20 to 0.95	.....	0.05	0.01	.....	99.5
Alloy C								
C-21	2.0 to 3.0	0.3 to 0.8	.....	.....	0.05	.....	0.6	99.5

SPECIFICATION FOR COPPER-SILICON ALLOY ROD, BAR, AND SHAPES

SB-98

(IDENTICAL WITH ASTM SPECIFICATION B 98-58 EXCEPT THAT THE HARD TEMPERS HAVE BEEN DELETED)

Scope

1. This specification covers copper-silicon alloy rod, bar, and shapes. The commercially available alloys are shown in the Appendix (Table III).

NOTE.—Material for hot forging is covered by the Specification for Copper and Copper-Alloy Forging Rod, Bar, and Shapes (ASTM Designation: B 124).

General Requirements

2. Material furnished under this specification shall conform to the applicable requirements of the current edition of the Specification for General Requirements for Wrought Copper and Copper-Alloy Rod, Bar, and Shapes (ASTM Designation: B 249).

Basis of Purchase

3. Orders for material under this specification shall include the following information:

(*1*) Alloy (Section 4),
(*2*) Temper (Section 5),
(*3*) Form: cross-section such as round, hexagonal, square, etc. (Section 7(*b*) and (*c*)),
(*4*) Diameter or distance between parallel surfaces (Section 7(*b*)),
(*5*) Length (Section 7 (*d*)),
(*6*) Edge contours (Section 8), and
(*7*) Weight: total for each size.

Chemical Composition

4. The material shall conform to the requirements as to chemical composition prescribed in Table I.

Tensile Properties

5. The material shall conform to the requirements as to tensile properties prescribed in Table II.

TABLE I.—CHEMICAL REQUIREMENTS.

	Alloy A	Alloy B	Alloy D
Copper, min, per cent	94.8	96.0	94.0
Silicon, per cent	2.8 to 3.8	0.8 to 2.0[a]	2.8 to 3.5
Lead, per cent	....	....	0.2 to 0.8
One or more of the following elements may be present within the limits specified below, subject to limits of the specific alloys as given in the Appendix (Table III):			
Manganese, max, per cent	1.5	0.7	1.5
Zinc, max, per cent	....	1.5	....
Iron, max, per cent	1.6	0.8	0.25
Lead, max, per cent	0.05	0.05	....
Sum of above elements, min, per cent	99.5	99.5	99.5

[a] An alloy containing as high as 2.6 per cent silicon is acceptable providing the sum of all elements other than copper, silicon, and iron does not exceed 0.3 per cent.

Test Specimens

6. In the tension test all material shall be pulled in full size when practicable. Full-size or machined test specimens shall be as specified in the Methods of Tension Testing of Metallic Materials (ASTM Designation: E 8). (The tension test specimens shall conform to the dimensions prescribed in Sections 8, 10, 11, or 12 of Methods E 8.) Whenever tension test results are obtained from both full size and from machined test specimens and they differ, the results obtained from full size test specimens shall be used to determine conformance to the specification requirements.

Dimensions and Tolerances

7. (*a*) The dimensions and tolerances for material covered by this specification shall be as prescribed in the current edition of ASTM Specification B 249, with particular reference to Sections 8 and 9 and the following tables of that specification:

(*b*) *Diameter or Distance Between Parallel Surfaces:*

(*1*) *Rod: Round, Hexagonal, Octagonal.*—See Section 8(*b*). For alloys A and D see Table II, and for alloy B see Table I.

(*2*) *Rod: Round, As-Hot-Rolled.*—See Section 8(*b*), Table VI.

(*3*) *Bar: Rectangular and Square.*—See Section 8(*b*). For alloys A and D see Tables IX and XI, and for alloy B see Tables VIII and X.

(*c*) *Shapes.*—The dimensional tolerances for shape shall be as agreed upon by the manufacturer and the purchaser and shall be specified in the order.

(*d*) *Length.*—See Section 8(*c*), Tables XII and XIV.

(*e*) *Straightness:*

(*1*) *Rod, Bar, and Shapes.*—See Section 9(*a*), Table XV.

(*2*) As-hot-rolled and as-extruded rod, bar, and shapes shall be commercially straight.

Edge Contours

8. The edge contours for material covered by this specification shall be as prescribed in Section 10 of the current edition of ASTM Specification B 249.

TABLE II.—TENSILE REQUIREMENTS.

Temper	Diameter or Distance Between Parallel Surfaces	Tensile Strength, min, psi	Yield Strength,[a] min, psi	Elongation in 4 × Diameter or Thickness of Specimen, min, per cent[b]
ALLOYS A AND D RODS, SQUARE BARS, AND SHAPES				
Soft	All forms, all sizes	52 000	15 000	35
Quarter-hard	All forms, all sizes	55 000	24 000	25
Half-hard	Rods and square bars:			
	Up to ½ in., incl.	70 000	38 000	17
	Over ½ to 1 in., incl.	70 000	38 000	17
	Over 1 to 2 in., incl.	70 000	38 000	17
	Shapes	[d]	[d]	[d]
ALLOYS A AND D BARS[c]				
Soft	All sizes	52 000	15 000	35
ALLOY B RODS, BARS, AND SHAPES				
Soft	All forms, all sizes	40 000	12 000	30
Half-hard	Rods:			
	Up to ½ in., incl.	55 000	20 000	11
	Over ½ to 1 in., incl.	55 000	20 000	12
	Over 1 to 2 in., incl.	55 000	20 000	12
	Bars and Shapes	[d]	[d]	[d]
Extra-hard[c] or Bolt temper	Rods:			
	Up to ½ in., incl.	85 000	55 000	6
	Over ½ to 1 in., incl.	75 000	45 000	8
	Over 1 to 1½ in., incl.	75 000	40 000	8

[a] Stress corresponding to 0.5 per cent strain.
[b] In any case a minimum gage length of 1 in. shall be used.
[c] Bars and shapes are not produced in the extra-hard temper.
[d] Physical requirements of alloys A and D shapes, and alloy B bars and shapes of the half-hard and hard tempers as agreed upon between the manufacturer and the purchaser at time of order.
[e] Rectangular sections having thickness less than the width.

APPENDIX

For the information of those using this specification, the commercially available specific alloys are listed in Table III together with the manufacturers' published chemical composition limits. The alloy designations listed below are for convenience only and have no commercial significance.

TABLE III.—COMMERCIALLY AVAILABLE COPPER-SILICON ALLOY ROD, BAR, AND SHAPES.

NOTE.—Analysis shall regularly be made only for the elements specifically mentioned in this table for a designated alloy. If the presence of other elements is suspected, or indicated in the course of routine analysis, further analysis shall be made either chemically or spectrographically to determine that the total of these other elements is not in excess of 0.50 or 0.30 per cent as specifically indicated in the table.

Alloy Number	Silicon, per cent	Iron, per cent	Manganese, per cent	Zinc, per cent	Lead, per cent	Aluminum, max, per cent	Copper plus Elements with Specific Limits, min, per cent
			ALLOY A				
A-2	2.8 to 3.2	0.2 max	.....	.....	0.05 max	.....	99.5
A-5	2.8 to 3.2	.....	0.8 to 1.2	.....	0.05 max	.....	99.5
A-6	2.8 to 3.5	0.8 to 1.6	.....	.....	0.05 max	.....	99.5
A-7	2.8 to 3.6	0.25 max	0.50 to 1.35	.....	0.05 max	.....	99.5
A-8	3.15 to 3.8	0.50 max	0.20 to 0.95	.....	0.05 max	0.01	99.5
			ALLOY B				
B-12	1.25 to 1.75	0.25 max	0.10 to 0.50	.....	0.05 max	.....	99.5
B-13	1.3 to 1.7	0.2 max	.....	0.5 to 1.5	0.05 max	.....	99.5
B-14	1.5 to 2.0	.....	0.2 to 0.4	.....	0.05 max	.....	99.5
B-16	1.5 to 2.0	.....	.....	.....	0.05 max	.....	99.5
B-17	2.0 to 2.6	0.3 to 0.7	.....	.....	0.05 max	.....	99.7
			ALLOY D				
D-32	2.85 to 3.35	0.25 max	0.85 to 1.35	.....	0.30 to 0.75	.....	99.5

SPECIFICATION FOR COPPER AND COPPER-ALLOY SEAMLESS CONDENSER TUBES AND FERRULE STOCK

SB-111

(IDENTICAL WITH ASTM SPECIFICATION B 111-60 EXCEPT THAT THE LAST CLAUSE IN THE NOTE UNDER PARAGRAPH 4(F) HAS BEEN ADDED)

Scope

1. This specification covers seamless tubes and ferrule stock of copper and various copper alloys up to 2 in., incl, in diameter, for use in surface condensers, evaporators, and heat exchangers. Nonarsenical copper will normally be of the types DHP, DLP, or OF, and arsenical copper will normally be of the type DPA of the Classification of Coppers (ASTM Designation: B 224).

Basis of Purchase

2. Orders for material under this specification shall include the following information:

(*1*) Material (Section 5),
(*2*) Temper (Section 4),
(*3*) Dimensions: diameter, thickness, length, weight (Section 16), and
(*4*) Quantity of each size.

Manufacture

3. The material shall be of such quality and purity that the finished product shall have the properties and characteristics prescribed in this specification, and shall be cold worked to the specified size.

Temper

4. (*a*) Muntz metal, admiralty metal, red brass, aluminum brass, aluminum bronze, and 80-20 copper-nickel tubes shall normally be furnished in annealed temper.

(*b*) 70-30 copper-nickel shall be supplied in one of the following tempers as specified:

Annealed
Drawn, stress-relieved

(*c*) Copper or arsenical copper tubes shall be supplied in any one of the following tempers, one of which shall be specified:

Light-drawn temper
Hard-drawn temper
Hard-drawn temper, end-annealed

(*d*) 90-10 copper-nickel tubes may be supplied in either light-drawn temper or annealed temper.

(*e*) Tubes supplied in light-drawn temper shall pass the expanding test specified in Section 8(*a*).

(*f*) Tubes for ferrule stock shall be annealed sufficiently to be fully recrystallized, but are not subject to the expanding test specified in Section 8(*a*).

NOTE—Material specified to meet requirements of the ASME Boiler and Pressure Vessel Code shall have tensile properties as prescribed in Table II, in which case the provisions for grain size in Section 7 do not apply.

Chemical Composition

5. The material shall conform to the requirements as to chemical composition (see Explanatory Note) prescribed in Table I.

Samples for Chemical Analysis

6. Samples for chemical analysis shall be taken in accordance with the Method of Sampling Wrought Non-Ferrous Metals and Alloys for Determination of Chemical Composition (ASTM Designation: E 55). The lot size, portion size, and selection of pieces shall be as follows:

Lot Size.—600 tubes or 2000 lb or fraction of either, whichever constitutes the greater weight.

Portion Size.—Pieces from two individual lengths of finished product.

Minimum Weight of Composite Sample.—150 g divided into three equal parts.

Microscopic Examination

7. Samples of annealed-temper tubes selected for test shall be subjected to microscopic examination at a magnification of 75 diameters and shall show uniform and complete recrystallization. Materials other than Muntz metal shall have an average grain size within the limits of 0.010 to 0.045 mm. The requirements of Section 7 do not apply to tubes of light-drawn, hard-drawn, or hard-drawn, end-annealed tempers.

Expanding Test

8. (*a*) The tubes selected for test shall be capable of withstanding the following expansion of its inside diameter at one end by driving a pin having a taper of 1½ in. per ft into the tube. The expanded tube shall show no cracking or rupture visible to the unaided eye.

Temper	Alloy	Expansion of Tube Inside Diameter, in per cent of Original Inside Diameter
Annealed	Muntz metal	15
	Admiralty	20
	Red brass	20
	Aluminum brass	20
	Aluminum bronze	20
	70-30 copper-nickel	30
	80-20 copper-nickel	30
	90-10 copper-nickel	30
Light-drawn	Copper	20
	Arsenical copper	20
	90-10 copper-nickel	30
Drawn, stress-relieved	70-30 copper-nickel	20

(*b*) Hard-drawn tubes not end-annealed are not subject to this test. When tubes are specified end-annealed, this test is required and shall be made on the annealed ends.

Flattening Test

9. Test tubes in the annealed condition shall be flattened on different elements throughout the lengths remaining after specimens for the expanding and metallographic tests have been taken. Each element shall be slowly flattened by one stroke of a press. The term "flattened" shall be interpreted as follows: A micrometer caliper set at three times the wall thickness shall pass over the tube freely throughout the flattened part except at the points where the change in element of flattening takes place. The flattened elements shall not show cracking or rupture clearly visible to the unaided eye.

Mercurous Nitrate Test

10. The test specimens, cut 6 in. in length, shall stand, without cracking, an immersion for 30 min in the standard mercurous nitrate solution. In the case of hard-drawn tubes, end-annealed, the test specimen shall be cut from the central unannealed portion of the tube. In all other cases the test specimen shall include the finished tube end. The mercurous nitrate test is not required for copper, arsenical copper or copper-nickel tubes.

Hydrostatic Test

11. Each tube shall stand, without showing weakness or defects, an internal hydrostatic pressure sufficient to subject the material to a fiber stress of 7000 psi, determined by the following formula for thin hollow cylinders under tension. The tube need not be tested at a hydrostatic pressure of over 1000 psi unless so specified.

$$P = 2\frac{tS}{D}$$

where:

P = hydrostatic pressure in pounds per square inch,
t = thickness of tube wall in inches,
D = outside diameter of the tube in inches, and
S = allowable stress of the material = 7000 psi.

Methods of Test and Chemical Analysis

12. (*a*) The properties and chemical compositions enumerated in this specification shall, in case of disagreement, be determined in accordance with the following methods of the American Society for Testing Materials:

Test	ASTM Designation
Chemical Analysis	E 36, E 53, E 54, E 62, E 75
Grain Size	E 2, E 3, E 79
Expansion (Pin Test)	B 153
Mercurous Nitrate	B 154
Tension	E 8

[a] These designations refer to the following methods of testing:
Methods for Chemical Analysis of Brasses (ASTM Designation: E 36),
Method for Chemical Analysis of Copper (Electrolytic Determination of Copper) (ASTM Designation: E 53),
Methods for Chemical Analysis of Special Brasses and Bronzes (ASTM Designation: E 54),
Photometric Methods for Chemical Analysis of Copper and Copper-Base Alloys (ASTM Designation: E 62),
Methods for Chemical Analysis of Copper-Nickel and Copper-Nickel-Zinc Alloys (ASTM Designation: E 75),
Methods of Preparation of Micrographs of Metals and Alloys (ASTM Designation: E 2),
Methods of Preparation of Metallographic Specimens (ASTM Designation: E 3),
Methods for Estimating the Average Grain Size of Wrought Copper and Copper-Base Alloys (ASTM Designation: E 79),
Method of Test for Expansion (Pin Test) of Copper and Copper-Alloy Tubing (ASTM Designation: B 153),
Method of Mercurous Nitrate Test for Copper and Copper Alloys (ASTM Designation: B 154), and
Methods of Tension Testing of Metallic Materials (ASTM Designation: E 8).

(*b*) The surface of the test specimen for microscopic examination shall approximate a radial longitudinal section of the tube.

TABLE I.—CHEMICAL REQUIREMENTS.

Material	Copper,[a] per cent	Tin, per cent	Aluminum, per cent	Nickel,[b] per cent	Lead, max, per cent	Iron, per cent	Zinc, per cent	Manganese, max, per cent	Arsenic, per cent	Antimony, per cent	Phosphorus, per cent
Muntz metal	59.0 to 63.0	.....	.....	.....	0.30	0.07 max	remainder	....	.....	....	....
Admiralty metal:											
Type A	70.0 to 73.0	0.9 to 1.2	.....	.....	0.07	0.06 max	remainder	....	.....	....	....
Type B	70.0 to 73.0	0.9 to 1.2	.....	.....	0.07	0.06 max	remainder	....	0.02 to 0.10	....	....
Type C	70.0 to 73.0	0.9 to 1.2	.....	.....	0.07	0.06 max	remainder	....	.....	0.02 to 0.10	....
Type D	70.0 to 73.0	0.9 to 1.2	.....	.....	0.07	0.06 max	remainder	....	.....	....	0.02 to 0.10
Red brass	84.0 to 86.0	.....	.....	.....	0.06	0.05 max	remainder	....	.....	....	....
Aluminum brass:											
Type B[c]	76.0 to 79.0	.....	1.8 to 2.5	.....	0.07	0.06 max	remainder	....	0.02 to 0.10	....	....
Aluminum bronze	93.0 min[d]	.....	5.0 to 6.5	.....	0.10	0.10 max	.....	....	0.35 max	....	....
70–30 copper-nickel	65.0 min[d]	.....	.....	29.0 to 33.0	0.05	0.40 to 0.70	1.0 max	1.0	.....	....	....
80–20 copper-nickel:											
Type A	74.0 min[d]	.....	.....	19.0 to 23.0	0.05	0.5 to 1.0	1.0 max	1.0	.....	....	....
90–10 copper-nickel	86.5 min[d]	.....	.....	9.0 to 11.0	0.05	0.5 to 2.0	1.0 max	1.0	.....	....	....
Copper	99.90 min	.....	.....	.....	.....	.....	.....	.....	.....	.....	0.04 max
Arsenical copper	99.40 min	.....	.....	.....	.....	.....	.....	.....	0.15 to 0.50	.....	0.04 max

[a] Silver counting as copper.
[b] Cobalt counting as nickel.
[c] Types A, C, and D aluminum brasses and 80–20 copper-nickel type B have been discontinued.
[d] Copper plus sum of named elements shall be 99.5 per cent min.

Significance of Numerical Limits

13. For purposes of determining compliance with the specified limits for requirements of the properties listed in the following table, an observed value or

Property	Rounded-Off Unit for Observed or Calculated Value
Chemical Composition	Nearest unit in the last right-hand place of figures
Grain Size:	
Up to 0.055 mm, incl.	Nearest multiple of 0.005 mm
Over 0.055 to 0.160 mm, incl.	Nearest 0.01 mm

a calculated value shall be rounded off as indicated in accordance with the rounding-off method of the Recommended Practices for Designating Significant Places in Specified Limiting Values (ASTM Designation: E 29).

Number of Tests

14. Two tubes shall be selected from each lot and subjected to the physical tests specified in Sections 7 to 10, inclusive.

Retests

15. If any test specimen representing a lot fails to conform to the requirements of Sections 5, 7, 8, and 9, two additional specimens, at the option of the manufacturer, may be taken as before, and submitted for check analysis or subjected to any tests in which the original specimen failed, but each of these specimens shall conform to the requirements specified.

Dimension and Weight Tolerances

16. (*a*) *Diameter.*—The outside diameter of the tubes shall not vary from that specified by more than the following amounts as measured by "go" and "no-go" ring gages:

Specified Diameter, in.	Tolerance,[a] in.
0.500 and under	±0.002
Over 0.500 to 0.740, incl.	±0.0025
Over 0.740 to 1.000, incl.	±0.003
Over 1.000 to 1.250, incl.	±0.0035
Over 1.250 to 2.000, incl.	±0.004

[a] For copper-nickel tubes the tolerance in each size class shall be 0.0005 in. larger than the tolerances in the above table.

(*b*) *Thickness.*—No tube at its thinnest point shall be less than the thickness specified.

(*c*) *Length.*—The length of the tubes shall not be less than that specified when measured at a temperature of 20 C (68 F), but may exceed the specified value by the amounts given in the following table:

Specified Length, ft	Tolerance, all plus, in.
Up to 15, incl	3/32
Over 15 to 20, incl	1/8
Over 20 to 30, incl	5/32
Over 30 to 60, incl	1/4
Over 60 to 100, incl[a]	3/8

[a] Condenser tubes in lengths over 100 ft are not in present demand. Tolerance values for these lengths will be developed as experience dictates.

NOTE.—For the purpose of determining conformance with the dimensional requirements prescribed in this specification, any measured value outside the specified limiting values for any dimension may be cause for rejection.

(*d*) *Squareness of Cut.*—The angle of cut of the end of any tube may depart from the square by not more than the following:

Tube Outside Diameter, in.	Tolerance, in.
Up to 5/8, incl	0.010
Over 5/8	0.016 per inch of diameter

(*e*) *Weight.*—No lot of tubes shall exceed the theoretical weight by more than 5 per cent. One cubic inch of the various materials covered by this specification shall be assumed to weigh:

Material	Unit Weight, lb per cu in.
Muntz metal	0.303
Admiralty	0.308
Red brass	0.316
Aluminum brass	0.301
Aluminum bronze	0.295
70–30 copper-nickel	0.323
80–20 copper-nickel:	
Type A	0.323
90–10 copper-nickel	0.323
Copper	0.323
Arsenical copper	0.323

Workmanship

17. Roundness, straightness, uniformity of the wall thickness, and inner and outer surface of the tube shall be such as to make it suitable for the intended application.

Finish

18. Annealed-temper tubes shall be clean and smooth but may have a superficial, dull iridescent film on both the inside and the outside surface. Drawn-temper tubes shall be clean and smooth, but may have a superficial film of drawing lubricant on the surfaces.

Inspection

19. The manufacturer shall afford the inspector, without charge, all reasonable facilities to satisfy him that the tubes are being furnished in accordance with this specification. All tests (except check analysis) and inspection shall be made at the place of manufacture, prior to shipment, unless otherwise specified, and shall be so conducted as not to interfere unnecessarily with the operation of the works.

Rejection

20. Material that fails to conform to this specification will be rejected, and the manufacturer shall be notified within 30 days after receipt of the material.

Explanatory Note

NOTE.—Individual manufacturers of condenser tubes offer modifications of the types of materials covered by this specification. Some of these are proprietary materials and many are sold under a trade-mark. This specification may be considered as covering these special materials when the change in analysis is specifically agreed upon by both the manufacturer and the purchaser, or when the purchaser waives adherence to stipulations of Section 5.

APPENDIX

TABLE II.—TENSILE REQUIREMENTS.[a]

Material	Temper	Tensile Strength, min, psi	Yield Strength, min, psi[b]	Elongation in 2 in., min, per cent
Muntz metal	annealed	50 000	20 000	...
Admiralty metal	annealed	45 000	15 000	...
Red brass	annealed	40 000	12 000	...
Aluminum brass	annealed	50 000	18 000	...
Aluminum bronze	annealed	50 000	19 000	...
70–30 copper-nickel	annealed	52 000	18 000	...
70–30 copper-nickel	drawn, stress-relieved	72 000	50 000	...
For wall thicknesses up to 0.048 in., incl				12
For wall thicknesses over 0.048 in., incl				15
80–20 copper-nickel	annealed	45 000	16 000	...
90–10 copper-nickel	annealed	40 000	15 000	...
Copper	light-drawn	36 000	30 000	...
	hard-drawn	45 000	40 000	...
Arsenical copper	light-drawn	36 000	30 000	...
	hard-drawn	45 000	40 000	...

[a] When so specified, two tubes shall be selected from each lot and subjected to the tension test which shall, in case of disagreement, be made in accordance with the Methods of Tension Testing of Metallic Materials (ASTM Designation: E 8).

Tension test specimens shall be of the full section of the tube and shall conform to the requirements of Section 13(*a*) of ASTM Methods E 8, unless the limitations of the testing machine preclude the use of such a specimen. Test specimens conforming to type No. 1 of Fig. 13 (Section 13(*b*)) of ASTM Methods E 8 may be used when a full section specimen cannot be tested.

Whenever tension test results are obtained from both full size and from machined test specimens and they differ, the results obtained from full size test specimens shall be used to determine conformance to the specification requirements.

Tension test results on material covered by this specification are not seriously affected by variations in speed of testing. A considerable range of testing speed is permissible; however, the range of stressing to the yield strength should not exceed 100,000 psi per minute. Above the yield strength the movement per minute of the testing machine head under load should not exceed 0.5 in. per in. of gage length (or distance between grips for full section specimens).

[b] At 0.5 per cent extension under load.

SPECIFICATION FOR NICKEL-COPPER ALLOY PLATE, SHEET, AND STRIP

SB-127

(IDENTICAL WITH ASTM SPECIFICATION B 127-61 EXCEPT THAT THE ROOFING QUALITY AND TEMPERED GRADES HAVE BEEN DELETED)

Scope

1. (*a*) This specification covers rolled nickel-copper alloy plate, sheet, and strip.

(*b*) *Definitions.*—The following definitions shall apply unless otherwise agreed upon between the manufacturer and the purchaser:

Definition	Thickness, in.	Width, in.
Hot-rolled plate (Note 1)	3/16 and over (Table III and IV)	(Table VI) (Note 3)
Hot-rolled sheet (Note 1)	0.018 to 0.250, incl (Table V)	(Table VIII)
Cold-rolled sheet (Note 2)	0.018 to 0.250, incl, (Table V)	(Table VIII)
Cold-rolled strip (Note 2)	0.005 to 0.125, incl (Table V)	(Table VIII)

NOTE 1.—Unless otherwise specified, material 1/16 to 1/4 in., incl, in thickness may be furnished as sheet or plate at the manufacturer's option, providing the material meets the specification requirements for the condition ordered.

NOTE 2.—Unless otherwise specified, material 14 in. and under in width may be furnished as sheet or strip at the manufacturer's option, providing the material meets the specification requirements for the condition ordered.

NOTE 3.—At the manufacturer's option, hot-rolled plate, in widths 10 in. and under, may be furnished as hot-finished rectangles with sheared or cut edges in accordance with the Specification for Nickel-Copper Alloy Rod and Bar (ASTM Designation: B 164), providing the mechanical property requirements of Specification B 127 are met.

(*c*) It should be understood that this specification is general. Provision is made herein for material suitable for the general run of drawing, forming, stamping, bending, joining operations, and all other common methods of fabrication. Since the material may be used for purposes where the requirements of the operations are too particular to be prescribed in a general specification, it is advisable in these instances for the purchaser to submit samples or detailed information to the manufacturer and secure an adjustment of processing to suit the conditions for which the material is intended (see Section 22).

Basis of Purchase

2. Orders for material under this specification shall include information with respect to the following:

(*a*) *Condition (Temper).*—Tables I and II and Appendix I.

(*b*) *Finish.*—Appendix I.

(*c*) *Dimensions.*—Thickness (in decimals of an inch, not gage number) (Appendix II), width and length (inch or fraction).

(*d*) *Optional Requirements:*

(*1*) *Strip.*—Whether to be furnished in coil, in cut straight lengths, or in random straight lengths.

(*2*) *Strip.*—Whether to be furnished with commercial slit edge, or square edge or round edge.

NOTE 4.—For strip under 0.025 in. in thickness, state whether grain size other than those shown in Table II is desired.

(*3*) *Plate.*—Whether to be furnished specially flattened, (Section 21 (*b*)); also how plate is to be cut (Tables VI and IX).

(*e*) *Fabrication Details.*—Not mandatory but are helpful to the manufacturer:

(*1*) *Welding or Brazing.*—Process to be employed.

(*2*) *Plate.*—Whether material is to be hot-formed.

(*f*) *Special Requirements.*—State nature and details of requirements (Section 22).

(*g*) *Certification and Inspection.*—State at the time the order is placed which of the following options, if any, is desired:

(*1*) Furnish *Certificate of Compliance* (includes chemical analyses and certification of compliance but does not include mechanical properties (Section 25 (*b*)).

(*2*) Furnish *Test Reports* (includes chemical analyses and mechanical properties (Section 25 (*c*)).

(*3*) *Samples for Check Analysis.*—Whether samples for check analysis should be furnished (Section 25 (*d*)).

(*4*) *Inspection at Place of Manufacture.*—Which tests are to be witnessed (Section 25 (*e*)).

Material

3. The material shall be of such quality that the finished product shall have the chemical composition, properties and characteristics described in this specification.

Manufacture

4. (*a*) Plate, sheet, and strip shall be produced by hot-working, annealing, pickling, cold-working, reannealing, and polishing, or by any combination of these processes.

(*b*) Plate, sheet, and strip shall be produced to the condition (temper), finish, and dimensions specified.

Chemical Composition

5. The material shall conform to the

TABLE I.—MECHANICAL PROPERTIES[a] FOR PLATE, SHEET AND STRIP.
All thicknesses and sizes unless otherwise indicated.

Condition	Tensile Strength, psi	Yield Strength[b] (0.2 per cent offset), min, psi	Elongation in 2 in., min, per cent	Rockwell Hardness (B Scale)[c]
Hot-Rolled Plate				
Annealed	70 000 min	28 000	35	110 to 140[e]
As-rolled[d]	75 000 min	40 000	30	125 to 180[e]
Hot-Rolled, Annealed and Pickled Sheet				
Annealed..... All.....	70 000 min	28 000	35	73 max
Cold-Rolled Sheet				
Annealed[f] (plain or satin-finished)....	70 000 to 85 000	28 000	35	73 max
Cold-Rolled Strip[h]				
Annealed[f]	70 000 to 85 000[g]	28 000	35[g]	68 max

[a] For applicable rounding-off procedures, see Section 14 (*b*).
[b] Yield strength requirements do not apply to material under 0.020 in. in thickness. See Section 14 (*c*).
[c] Hardness values (Rockwell, Brinell or equivalent) are informative only and are not to be construed as the basis for acceptance or rejection for those conditions for which tensile requirements are specified. For other conditions hardness requirements are mandatory.
[d] As-rolled plate specified "suitable for hot forming" shall be furnished from heats of known good hot-malleability characteristics (Appendix I, Section (*A2*)). There are no applicable tensile or hardness requirements for such material).
[e] Numbers shown are Brinell hardness values and are informative only. They are not to be construed as the basis for acceptance or rejection.
[f] For deep drawing and spinning quality, see Sections 10, 11, and Table II.
[g] Not applicable for thicknesses under 0.010 in.
[h] Accurate hardness determinations are difficult to make on strip under 0.005 in. in thickness and are not recommended (See Note 7).

following requirements as to chemical composition:[a]

Nickel,[b] per cent	63.0 to 70.0
Copper, per cent	remainder
Iron, max, per cent	2.5
Manganese, max, per cent	1.25
Carbon, max, per cent	0.3
Silicon, max, per cent	0.5
Sulfur, max, per cent	0.024

[a] For the applicable rounding-off procedures, see Section 14 (*b*).
[b] Cobalt counting as nickel.

Samples for Chemical Analysis

6. (*a*) Unless otherwise agreed upon by the manufacturer and the purchaser, heat (ladle) analyses furnished by the manufacturer shall be accepted as defining the composition of the material furnished.

(*b*) If samples for check analysis are desired, they shall be so specified by the purchaser, at the time of placement of the order. Samples shall be taken from material representative of each 5000 lb., or fraction thereof, of the finished material, and shall conform to the requirements of Section 5.

(*c*) Such samples for chemical analysis shall be taken in accordance with the procedure described in the Method of Sampling Wrought Non-Ferrous Metals and Alloys for Determination of Chemical Composition (ASTM Designation: E 55). The lot size, portion size and selection of pieces shall be as follows:

Lot Size.—5,000 lb, or fraction thereof, of finished material.

Portion Size.—Pieces from four individual lengths of finished material. If the lot consists of less than four lengths, a piece shall be taken from each individual length.

Minimum Weight of Composite Sample.—150 g divided into three equal parts, one for the manufacturer, one for the purchaser, and one for an umpire, if necessary.

(*d*) Samples for check analyses, when requested after the date of placement of the order, shall be as agreed upon between the manufacturer and the purchaser.

TABLE II.—GRAIN SIZE[a] AND HARDNESS[a] FOR COLD-ROLLED, DEEP-DRAWING AND SPINNING QUALITY SHEET AND STRIP.

Thickness, in.	Calculated Diameter of Average Grain Section, max		Corresponding ASTM Micro-Grain Size No.	Rockwell B[b] Hardness, max
	mm	in.		
Sheet (56 in. Wide and Under)				
0.050 and less	0.075	0.0030	4.5	68
Over 0.050 to 0.250, incl	0.110	0.0043	3.5	68
Strip[c] (All Widths)				
0.005[c] to 0.015, incl	0.022	0.0009	8[d]	73[d]
Over 0.015 to 0.024, incl	0.060	0.0024	5.5	70
Over 0.024 to 0.125, incl	0.075	0.0030	4.5	68

[a] See Section 14(*b*) for the applicable rounding-off procedure.
[b] For Rockwell or equivalent hardness conversions see ASTM Hardness Conversion Tables for Metals E 140.
[c] For ductility evaluations for strip under 0.005 in. in thickness the springback test such as that described in the Method of Test for Temper of Strip and Sheet Metals for Electronic Devices (ASTM Designation: F 155) is often used and the manufacturer should be consulted.
[d] Accurate grain size and hardness determinations are difficult to make on strip under 0.005 in. in thickness and are not recommended (See Note 7).
[e] Grain size and hardness requirements other than those indicated above shall be agreed upon between the manufacturer and the purchaser.

Lots for Mechanical Testing

7. Unless otherwise specified, a lot for mechanical testing shall be defined as follows:

Plate.—A lot of plate shall consist of the products resulting from the rolling of one heat of material in the same condition (temper) and specified thickness.

Sheet and Strip.—A lot of sheet or strip shall consist of material from one heat in the same form (sheet or strip), condition (temper), finish, and specified thickness but in no case more than 25,000 lb.

NOTE 5.—Where material cannot be identified by heat, a lot shall consist of not more than 500 lb of material in the same thickness and condition, except that for plates weighing over 500 lb only one specimen shall be taken.

Sampling for Mechanical Tests

8. (*a*) Samples of the material to provide test specimens for mechanical tests shall be taken from such locations in each lot as to be representative of that lot.

(*b*) When samples are to be taken after delivery, the purchaser of material ordered to cut lengths may arrange with the manufacturer to have an excess length furnished or request on the order additional material of adequate size to provide sample coupons for inspection purposes.

Mechanical Properties

9. The material shall conform to the requirements as to mechanical properties prescribed in Table I.

Hardness

10. Material tested in a single thickness shall conform to the Rockwell or equivalent hardness requirements prescribed in Tables I and II, as applicable, with the exception that hardness values in Table I are informative only for those conditions of plate, sheet and strip for which tensile requirements have been specified.

NOTE 6.—For hardness conservations, see the Hardness Conversion Tables for Metals (Relationship Between Diamond Pyramid Hardness, Brinell Hardness, and Rockwell Hardness) (ASTM Designation: E 140).

NOTE 7.—Caution should be observed in using the Rockwell test on thin material, as the results may be affected by the specimen thickness. For thicknesses under 0.050 in. the use of the Rockwell superficial or the Vickers hardness test is suggested. For thicknesses of 0.005 to 0.015 in., incl the Vickers hardness test should be used.

Grain Size of Deep Drawing Quality and Spinning Quality Sheet and Strip

(See Appendix I)

11. "Deep drawing quality" and "spinning quality" sheet and strip shall conform to the grain sizes as illustrated in Plate I of the Methods for Determining the Average Grain Size of Metals (ASTM Designation: E 112). The requirements shall be as indicated in Table II.

Test Specimens

12. (*a*) Tension test specimens from material $\frac{3}{4}$ in. and under in thickness shall be of the full thickness of the material, and shall be machined to the form and dimensions shown in Fig. 7 of the Methods of Tension Testing of Metallic Materials (ASTM Designation: E 8).

(*b*) Tension test specimens from material over $\frac{3}{4}$ in. in thickness may be of the full thickness of the material, machined to the form and dimensions shown in Fig. 6 of Methods E 8, except that the elongation shall be measured for the 2-in. gage length that includes the fracture. In case of dispute the referee method shall be to prepare specimens by machining to the form and dimensions shown in Fig. 8 of Methods E 8.

(*c*) Tension test specimens from plate, sheet, and strip shall be taken transverse to the direction of rolling when width will permit.

Number of Tests

13. (*a*) *Tension Tests.*—Unless otherwise specified, one tension test shall be made on each lot of material as defined in Section 7.

(*b*) *Hardness Tests.*—Unless otherwise specified, hardness tests need not be made where hardness requirements are designated to be "for information only." Unless otherwise specified, where hardness values are shown as "mandatory" requirements, at least two, and not more than six, hardness readings shall be made on individual specimens in any lot, as defined in Section 7.

(*c*) *Grain Size.*—Unless otherwise specified, grain size tests shall be made only on "deep-drawing" and "spinning quality" sheet and strip. In such cases, one grain size test shall be made on each lot of material as defined in Section 7.

Methods of Test and Chemical Analysis

14. (*a*) The chemical composition and mechanical properties of the material as enumerated in this specification shall be determined, in case of disagreement, in accordance with the following methods of the American Society for Testing Materials:

Test	ASTM Designation[a]
Chemical Analysis	E 76
Tension	E 8
Brinell Hardness	E 10
Rockwell Hardness	E 18
Hardness Conversion	E 140
Grain Size	E 112
Rounding-off Procedure	E 29
Method of Sampling	E 55
Spring-back	F 155

[a] These designations refer to the following methods of testing:
E 76, Methods for Chemical Analysis of Nickel-Copper Alloys,
E 8, Methods of Tension Testing of Metallic Materials,
E 10, Method of Test for Brinell Hardness of Metallic Materials,
E 18, Methods of Test for Rockwell Hardness and Rockwell Superficial Hardness of Metallic Materials,
E 140, Hardness Conversion Tables for Metals (Relationship Between Diamond Pyramid Hardness, Brinell Hardness, and Rockwell Hardness),
E 112, Methods for Estimating the Average Grain Size of Metals,
E 29, Recommended Practices for Designating Significant Places in Specified Limiting Values,
E 55, Method of Sampling Wrought Non-Ferrous Metals and Alloys for Determination of Chemical Composition, and
F 155, Method of Test for Temper of Strip and Sheet Metals for Electronic Devices.

(*b*) For purposes of determining compliance with the specified limits for requirements of the properties listed in the following table, an observed value or a calculated value shall be rounded off as indicated below, in accordance with the rounding-off method of the Recommended Practices for Designating Significant Places in Specified Limiting Values (ASTM Designation: E 29).

Test	Rounded-off Unit for Observed or Calculated Value
Chemical composition, hardness, and tolerances (when expressed in decimals)	nearest unit in the last right-hand place of figures of the specified limit.
Tensile strength, yield strength	nearest 1000 psi.
Elongation	nearest 1 per cent
Grain size: 0.060 mm (0.0024 in.) or larger	nearest multiple of 0.005 mm (0.0002 in.)
less than 0.060 mm (0.0024 in.)	nearest multiple of 0.002 mm (0.0001 in.)

(*c*) In lieu of the offset method, the minimum yield strength may be determined as the stress required to produce the elongation under load as calculated by the following formula:

$$X = \left(\frac{Y}{Z} + 0.002\right) \times \text{gage length in inches}$$

where:
X = limiting extension under load in inches,
Y = specified yield strength at 0.2 per cent offset, from Table I, and

Z = modulus of elasticity (26,000,000 psi)

In case of dispute the offset method shall be used as the referee procedure.

(*d*) The measurement of grain size may be carried out by the planimetric method, the comparison method or the intercept method described in Methods E 112. However, in case of disagreement the "referee" method for determining grain size shall be the planimetric method.

Permissible Variations in Thickness and Weight

15. (*a*) The material covered by this specification shall be assumed to weigh 0.319 lb per cu in.

(*b*) *Plate.*—For plates up to 2 in., incl, in thickness the permissible variation under the specified thickness and permissible excess in overweight shall not exceed the amounts prescribed in Table III. For plates over 2 in. in thickness the permissible variations over the specified thickness shall not exceed the amounts prescribed in Table IV.

(*c*) *Sheet and Strip.*—The permissible variations in thickness of sheet and strip shall be as prescribed in Table V. The thickness of strip and sheet shall be measured with the micrometer spindle $\frac{3}{8}$ in. or more from any edge for material 1 in. or over in width and at any place on strip under 1 in. in width.

Permissible Variations in Width or Diameter

16. (*a*) *Plate.*—The permissible variations in width of rectangular plates and diameter of circular plates shall be as prescribed in Tables VI and VII.

(*b*) *Sheet and Strip.*—The permissible variations in width for sheet and strip shall be as prescribed in Table VIII.

Permissible Variations in Length

17. (*a*) Sheet and strip of all sizes may be ordered to cut lengths, in which case a variation of $\frac{1}{8}$ in. over the specified length shall be permitted.

(*b*) Permissible variations in the length of rectangular plate shall be as prescribed in Table IX.

Straightness

18. (*a*) The edgewise curvature (depth of chord) of flat sheet, strip and plate shall not exceed 0.05 in. multiplied by the length in feet.

(*b*) Straightness for coiled strip material is subject to agreement between the manufacturer and the purchaser.

TABLE III.—PERMISSIBLE VARIATIONS IN THICKNESS AND OVERWEIGHT OF RECTANGULAR PLATES.

NOTE.—All plates shall be ordered to thickness and not to weight per square foot. No plates shall vary more than 0.01 in. under the thickness ordered, and the overweight of each lot[a] in each shipment shall not exceed the amount given in the table. Spot grinding is permitted to remove surface imperfections, such spots not to exceed 0.01 in. under the specified thickness.

Specified Thickness, in.	Permissible Excess in Average Weight[b,c] per Square Foot of Plates for Widths Given in Inches Expressed in Percentage of Nominal Weights									
	Under 48	48 to 60, excl	60 to 72, excl	72 to 84, excl	84 to 96, excl	96 to 108, excl	108 to 120, excl	120 to 132, excl	132 to 144, excl	144 to 160, incl
$\frac{3}{16}$ to $\frac{5}{16}$, excl	9.0	10.5	12.0	13.5	15.0	16.5	18.0	....	....	....
$\frac{5}{16}$ to $\frac{3}{8}$, excl	7.5	9.0	10.5	12.0	13.5	15.0	16.5	18.0	....	....
$\frac{3}{8}$ to $\frac{7}{16}$, excl	7.0	7.5	9.0	10.5	12.0	13.5	15.0	16.5	18.0	19.5
$\frac{7}{16}$ to $\frac{1}{2}$, excl	6.0	7.0	7.5	9.0	10.5	12.0	13.5	15.0	16.5	18.0
$\frac{1}{2}$ to $\frac{5}{8}$, excl	5.0	6.0	7.0	7.5	9.0	10.5	12.0	13.5	15.0	16.5
$\frac{5}{8}$ to $\frac{3}{4}$, excl	4.5	5.5	6.0	7.0	7.5	9.0	10.5	12.0	13.5	15.0
$\frac{3}{4}$ to 1, excl	4.0	4.5	5.5	6.0	7.0	7.5	9.0	10.5	12.0	13.5
1 to 2, incl	4.0	4.0	4.5	5.5	6.0	7.0	7.5	9.0	10.5	12.0

[a] The term "lot" applied to the above table means all of the plates of each group width and each group thickness.

[b] The permissible overweight for lots of circular and sketch plates shall be 25 per cent greater than the amounts given in the above table.

[c] The weight of individual plates shall not exceed the nominal weight by more than 1¼ times the amount given in the table and footnote b.

TABLE IV.—PERMISSIBLE VARIATIONS IN THICKNESS FOR RECTANGULAR PLATES OVER 2 IN. IN THICKNESS.

Specified Thickness, in.	Permissible Variations, in., over Specified Thickness for Widths Given, in.					
	To 36, excl	36 to 60, excl	60 to 84, excl	84 to 120, excl	120 to 132, excl	132 and over
Over 2 to 3, excl	$\frac{1}{16}$	$\frac{3}{32}$	$\frac{7}{64}$	$\frac{1}{8}$	$\frac{1}{8}$	$\frac{9}{64}$
3 to 4, incl	$\frac{5}{64}$	$\frac{3}{32}$	$\frac{7}{64}$	$\frac{1}{8}$	$\frac{1}{8}$	$\frac{9}{64}$

NOTE.—Permissible variation under specified thickness, 0.01 in.

Edges

19. (*a*) When finished edges of strip are specified in the contract or order, the following descriptions shall apply:

Square-Edge Strip shall be supplied with finished edges, with sharp, square corners, without bevel or rounding.

Round-Edge Strip shall be supplied with finished edges, semi-circular in form, the diameter of the circle forming the edge being equal to the strip thickness.

(*b*) When no description of any required form of strip edge is given, it shall be understood that edges such as would result from slitting or shearing will be acceptable.

(*c*) Sheet shall have sheared edges.

(*d*) Plate shall have sheared or cut (machined, abrasive cut, powder cut or inert arc cut) edges, as specified.

Squareness (Sheet)

20. For sheets of all thicknesses, the angle between adjacent sides shall be 90 ± 0.15 deg ($\frac{1}{16}$ in. in 24 in.).

Flatness

21. (*a*) There shall be no flatness requirements for "deep drawing quality," and "spinning quality" sheet and strip (see Appendix I, Sections (*C*) and (*D*), as applicable).

(*b*) Standard flatness tolerances for plate shall conform to the requirements of Table X. "Specially-flattened" plate, when so specified, shall have permissible variations in flatness as agreed upon between the manufacturer and the purchaser.

Special Requirements

22. (*a*) Special tolerances other than those specified herein shall be as agreed upon by the manufacturer and the purchaser.

(*b*) Special analyses, test procedures, mechanical properties, and quallty requirements not covered by this specification shall be as agreed upon by the manufacturer and the purchaser.

(*c*) When material is intended for nuclear applications and other critical end uses, the manufacturer shall be notified at the time of placement of the inquiry or order to determine if material of quality and inspection procedures normally employed for commercial material to this specification are adequate. In the event that more critical quality or more rigid inspection standards are indicated, the manufacturer and the purchaser shall agree upon such standards prior to production.

TABLE V.—PERMISSIBLE VARIATIONS IN THICKNESS OF SHEET AND STRIP.

Specified Thickness, in.	Permissible Variations in Thickness, in., for Widths Given in Inches			
	SHEET			
	Hot-Rolled		Cold-Rolled	
	48 and Under	Over 48 to 60, incl	48 and Under	Over 48 to 60, incl
	Plus and Minus[a]	Plus and Minus[a]	Plus and Minus[a]	Plus and Minus[a]
0.018 to 0.025, incl	0.003	0.004	0.002	0.003
Over 0.025 to 0.034, incl	0.004	0.005	0.003	0.004
Over 0.034 to 0.043, incl	0.005	0.006	0.004	0.005
Over 0.043 to 0.056, incl	0.005	0.006	0.004	0.005
Over 0.056 to 0.070, incl	0.006	0.007	0.005	0.006
Over 0.070 to 0.078, incl	0.007	0.008	0.006	0.007
Over 0.078 to 0.093, incl	0.008	0.009	0.007	0.008
Over 0.093 to 0.109, incl	0.009	0.010	0.007	0.009
Over 0.109 to 0.125, incl	0.010	0.012	0.008	0.010
Over 0.125 to 0.140, incl	0.012	0.014	0.008	0.010
Over 0.140 to 0.171, incl	0.014	0.016	0.009	0.012
Over 0.171 to 0.187, incl	0.015	0.017	0.010	0.013
Over 0.187 to 0.218, incl	0.017	0.019	0.011	0.015
Over 0.218 to 0.234, incl	0.018	0.020	0.012	0.016
Over 0.234 to 0.250, incl	0.020	0.022	0.013	0.018

Specified Thickness, in.	COLD-ROLLED STRIP
	All Widths
	Plus and Minus[a]
Under 0.006	10[b]
0.006 to 0.015, incl	0.001
Over 0.015 to 0.050, incl	0.0015
Over 0.050 to 0.093, incl	0.0025
Over 0.093 to 0.125, incl	0.004

[a] Measured ⅜ in. or more from any edge except for strip under 1 in. in width which is measured at any place.

[b] Expressed as per cent of nominal thickness.

TABLE VI.—PERMISSIBLE VARIATIONS IN WIDTH[a] OF SHEARED AND ABRASIVE CUT RECTANGULAR PLATE.[b]

Specified Thickness, in.	Permissible Variations in Width for Widths Given, in.									
	Up to 30, incl		Over 30 to 72, incl		Over 72 to 108, incl		Over 108 to 144, incl		Over 144 to 160, incl	
	Plus	Minus	Plus	Minus	Plus	Minus	Plus	Minus	Plus	Minus
Sheared:[d]										
$\frac{3}{16}$ to $\frac{5}{16}$, excl	$\frac{3}{16}$	$\frac{1}{16}$	$\frac{1}{4}$	$\frac{1}{16}$	$\frac{3}{8}$	$\frac{1}{16}$	$\frac{1}{2}$	$\frac{1}{16}$	....	....
$\frac{5}{16}$ to $\frac{1}{2}$, excl	$\frac{1}{4}$	$\frac{1}{16}$	$\frac{3}{8}$	$\frac{1}{16}$	$\frac{3}{8}$	$\frac{1}{16}$	$\frac{1}{2}$	$\frac{1}{16}$	$\frac{5}{8}$	$\frac{1}{16}$
$\frac{1}{2}$ to $\frac{3}{4}$, excl	$\frac{3}{8}$	$\frac{1}{16}$	$\frac{3}{8}$	$\frac{1}{16}$	$\frac{1}{2}$	$\frac{1}{16}$	$\frac{5}{8}$	$\frac{1}{16}$	$\frac{3}{4}$	$\frac{1}{16}$
$\frac{3}{4}$ to 1, excl	$\frac{1}{2}$	$\frac{1}{16}$	$\frac{1}{2}$	$\frac{1}{16}$	$\frac{5}{8}$	$\frac{1}{16}$	$\frac{3}{4}$	$\frac{1}{16}$	$\frac{7}{8}$	$\frac{1}{16}$
1 to 1¼, incl	$\frac{5}{8}$	$\frac{1}{8}$	$\frac{5}{8}$	$\frac{1}{8}$	$\frac{3}{4}$	$\frac{1}{8}$	$\frac{7}{8}$	$\frac{1}{16}$	1	$\frac{1}{8}$
Abrasive cut:[d,e]										
$\frac{3}{16}$ to 1¼, incl	$\frac{1}{16}$	$\frac{1}{16}$	$\frac{1}{16}$	$\frac{1}{16}$	$\frac{1}{16}$	$\frac{1}{16}$	$\frac{1}{16}$	$\frac{1}{16}$	$\frac{1}{16}$	$\frac{1}{16}$
Over 1¼ to 4, incl	$\frac{1}{8}$	$\frac{1}{8}$	$\frac{1}{8}$	$\frac{1}{8}$	$\frac{1}{8}$	$\frac{1}{8}$	$\frac{1}{8}$	$\frac{1}{8}$	$\frac{1}{8}$	$\frac{1}{8}$

[a] Permissible variations in width for powder or inert arc cut plate shall be as agreed upon between the manufacturer and the purchaser.

[b] Permissible variations in machined, powder or inert arc cut circular plate shall be as agreed upon between the manufacturer and the purchaser.

[c] The minimum sheared width is 10 in. for material ¾ in. and under in thickness, and 20 in. for material over ¾ in. in thickness.

[d] The minimum abrasive cut width is 2 in. and increases to 4 in. for thicker plates.

[e] These tolerances are applicable to lengths of 240 in., max. For lengths over 240 in. an additional $\frac{1}{16}$ in. is permitted, both plus and minus.

TABLE VII.—PERMISSIBLE VARIATIONS IN DIAMETER FOR SHEARED CIRCULAR PLATES.

Specified Diameter, in.	Permissible Variations Over Specified Diameter for Thickness Given, in.[a]
	To ¾, incl
20 to 32, excl	$\frac{1}{4}$
32 to 84, excl	$\frac{5}{16}$
84 to 108, excl	$\frac{3}{8}$
108 to 140, incl	$\frac{7}{16}$

[a] No permissible variations under.

Workmanship and Finish

23. The material shall be uniform in quality and temper, smooth, commercially straight or flat, and free from injurious defects.

Marking

24. Unless otherwise specified, each bundle or shipping container shall be marked with the name of the material, this specification number, the size, gross, tare and net weight, consignor and consignee address, contract or order number, or such other information as may be defined in the contract or order.

Certification and Inspection

25. (*a*) Unless otherwise agreed upon between the manufacturer and purchaser, certification shall be based on one of the options described in Paragraphs (*b*) and (*c*). The option desired shall be specified on the individual purchase order (Section 2 (*g*)). In the event that neither of the above options is specified, the basis for acceptance or rejection shall be based on the provisions described in Paragraph (*b*).

(*b*) *Certificate of Compliance.*—The Certificate of Compliance shall consist of the results of the chemical (ladle) analyses of each heat in the shipment and a statement to the effect that material complies with requirements of the specification, based on available production data. No mechanical properties will be furnished on such certificates.

NOTE 8.—In the event results of both chemical analyses and mechanical property tests are desired, see Section 25 (*c*).

(*c*) *Test Reports.*—Test Reports shall consist of a statement to the effect that material complies with the requirements of the specification and the manufacturer shall also include in the Test Report the results of chemical (ladle) analyses of each heat and the results of mechanical property tests for each lot of materials furnished.

NOTE 9.—Where material is intended for ASME Boiler and Pressure Vessel Code or other code requirements, it shall be the responsibility of the purchaser to determine whether a Certificate of Compliance (Section 25 (*b*)) will be acceptable to the responsible inspector or code authority or whether, in such instances a Test Report (Section 25 (*c*)) will be required.

(*d*) *Samples for Check Analysis.*—When, in addition to the above options on certification, the purchaser desires to make check analyses, sufficient additional material shall be ordered to provide samples for such check analyses. Analyses shall be made in the purchaser's laboratory or elsewhere at the expense of the purchaser.

(*e*) *Purchaser's Inspection at Place of Manufacture.*—When specified on the purchase order, inspection by the purchaser's representative may be made at the place of manufacture prior to shipment. In such cases, the purchaser or his representative shall state which tests he desires to witness. The manufacturer shall give the purchaser ample notice in writing as to when tests shall be conducted so that the purchaser's representative may witness any tests (excluding check analyses) that he may desire. Unless otherwise agreed upon, if the purchaser's representative does not present himself at the manufacturer's plant within 14 days after the notified date set for testing, the manufacturer shall consider mill inspection as having been waived, shall proceed with his own testing, and shall furnish the purchaser with a Certificate of Compliance or a Test Report (Section 25 (*b*) and (*c*)), whichever has been agreed upon between the inspector and the manufacturer.

The manufacturer shall afford the inspector representing the purchaser all reasonable facilities to satisfy him that the material is being furnished in accordance with this specification. Where such plant inspection may involve unusual handling, such as unpacking and repacking, retesting and reinspection and other unusual operations resulting in undue loss of time and production, the manufacturer shall so notify the purchaser.

TABLE VIII.—PERMISSIBLE VARIATIONS IN WIDTH OF SHEET AND STRIP.

Specified Thickness, in.	Specified Width, in.	Permissible Variations in specified width, in.	
		Plus	Minus
Sheet			
0.187 and under	2 and over	0.125	0
Over 0.187 to 0.250, incl.	6 and over	0.125	0
Strip (Slit Edges)			
Slit edge:[a]			
0.009 and under	All widths	0.005	0.005
Over 0.009 to 0.024, incl.	All widths	0.007	0.007
Over 0.024 to 0.075, incl.	14 and under	0.007	0.007
Over 0.075 to 0.100, incl.	14 and under	0.009	0.009
Over 0.100 to 0.125, incl.	14 and under	0.012	0.012

[a] Rolled round or square edge strip in thicknesses of 0.071 to 0.125 in., incl., in widths 3 in. and under, shall have permissible variations of ±0.005 in. Permissible variations for other sizes shall be as agreed upon between the manufacturer and the purchaser.

TABLE IX.—PERMISSIBLE VARIATIONS IN LENGTH[a] OF SHEARED AND ABRASIVE CUT[b] RECTANGULAR PLATE.[c]

Specified Thickness, in.	Permissible Variation in Length for Lengths Given, in.															
	Up to 60, incl		Over 60 to 96, incl		Over 96 to 120, incl		Over 120 to 240, incl		Over 240 to 360, incl		Over 360 to 450, incl		Over 450 to 540, incl		Over 540	
	Plus	Minus	Plus	Minus	Plus	Minus	Plus	Minus	Plus	Minus	Plus	Minus	Plus	Minus	Plus	Minus
Sheared:[d]																
3/16 to 5/16, excl.	3/16	1/8	1/4	1/8	3/8	1/8	1/2	1/8	5/8	1/8	3/4	1/8	7/8	1/8	7/8	1/8
5/16 to 1/2, excl.	3/8	1/8	1/2	1/8	1/2	1/8	1/2	1/8	5/8	1/8	3/4	1/8	7/8	1/8	1	1/8
1/2 to 3/4, excl.	1/2	1/8	1/2	1/8	5/8	1/8	5/8	1/8	3/4	1/8	7/8	1/8	1 1/8	1/8	1 1/8	1/8
3/4 to 1, excl.	5/8	1/8	5/8	1/8	3/4	1/8	3/4	1/8	7/8	1/8	1 1/8	1/8	1 3/8	1/8	1 3/8	1/8
1 to 1 1/4, incl.	3/4	1/8	3/4	1/8	3/4	1/8	7/8	1/8	1 1/8	1/8	1 3/8	1/8	1 3/8	1/8	...	...
Abrasive cut:[b]																
3/16 to 1 1/2, incl.	1/16	1/16	1/16	1/16	1/16	1/16	1/16	1/16	1/16	1/16	1/16	1/16	1/16	1/16	...	...
Over 1 1/2 to 4, incl.	1/8	1/8	1/8	1/8	1/8	1/8	1/8	1/8	1/8	1/8	1/8	1/8	1/8	1/8	...	...

[a] Permissible variations in length for powder or inert arc cut plate shall be as agreed upon tween the manufacturer and the purchaser.

[b] Abrasive cut applicable to a maximum length of 144 or 400 in. depending on the thickness and width ordered.

[c] Permissible variations in machined, powder or inert arc cut circular plate shall be as agreed upon between the manufacturer and the purchaser.

[d] The minimum sheared length is 10 in.

Rejection

26. Material not conforming to this specification or to authorized modifications thereof shall be subject to rejection.

Rehearing

27. Samples tested in accordance with this specification that represent rejected material shall be preserved for not less than three weeks from the date of the test report. In case of dissatisfaction with the results of the tests, the manufacturer may make claim for a rehearing within that time.

TABLE X.—PERMISSIBLE VARIATIONS FROM FLATNESS OF RECTANGULAR, CIRCULAR, AND SKETCH PLATES.

Specified Thickness, in.	Permissible Variations from a Flat Surface for Thickness and Widths Given, in.								
	To 48, excl	48 to 60 excl	60 to 72, excl	72 to 84, excl	84 to 96, excl	96 to 108, excl	108 to 120, excl	120 to 144, excl	144 and over
3/16 to 1/4, excl.	3/4	1 1/16	1 1/4	1 3/8	1 5/8	1 5/8	...	...	...
1/4 to 3/8, excl.	1 1/16	3/4	1 5/16	1 1/8	1 3/8	1 7/16	1 9/16	1 7/8	...
3/8 to 1/2, excl.	1/2	9/16	11/16	3/4	15/16	1 1/8	1 1/4	1 7/16	1 3/4
1/2 to 3/4, excl.	1/2	9/16	5/8	5/8	13/16	1 1/8	1 3/8	1 3/8	1 3/8
3/4 to 1, excl.	1/2	9/16	5/8	5/8	3/4	15/16	15/16	1	1 1/8
1 to 2, excl.	1/2	9/16	9/16	9/16	11/16	11/16	11/16	3/4	1
2 to 4, incl.	1/4	5/16	3/8	7/16	1/2	9/16	5/8	3/4	7/8

NOTE 1.—Permissible variations apply to plates up to 12 ft in length, or to any 12 ft of longer plates.

NOTE 2.—If the longer dimension is under 36 in. the permissible variation is not greater than 1/4 in.

NOTE 3.—The shorter dimension specified is considered the width, and the permissible variation in flatness across the width does not exceed the tabular amount for that dimension.

NOTE 4.—The maximum deviation from a flat surface does not customarily exceed the tabular tolerance for the longer dimension specified.

APPENDIX I

The various conditions (tempers) and finishes in which plate, sheet and strip are procurable are as indicated below. These are subject to change and the manufacturer should be consulted for the latest information available.

(A) *Plate, Hot-Rolled:*

(*A1*) *Annealed Plate.*—Hot rolled and annealed with an oxide surface, and suitable for heavy cold forming. Available with a descaled (mineral shot-blasted) surface, when so specified.

(*A2*) *As-Rolled Plate.*—As rolled with an oxide surface. Available with a descaled (mineral shot-blasted) surface, when so specified. Suitable for flat work, mild forming or tube sheets. When intended for tube sheets, specify plates to be "specially-flattened." When intended for hot forming, this should be indicated on the purchase order so that the manufacturer may select material known to have good hot-malleability characteristics.

(B) *Sheet, Hot-Rolled:*

(*B1*) *Annealed and Pickled Sheet.*—Hot rolled and annealed with a pickled matte finish. Properties similar to (*C1*) but with broader thickness tolerances. Not suggested for applications where the finish of a cold-rolled sheet is considered essential, or for deep drawing or spinning.

(C) *Sheet, Cold-Rolled:*

(*C1*) *Annealed Sheet.*—Cold rolled, annealed and leveled, with a dull or matte finish. A general purpose sheet.

(*C2*) *Annealed, Satin Finish Sheet.*—Same as (*C1*) with satin finish on one side, comparable with No. 180 emery grind.

(*C3*) *Spinning Quality Sheet.*—Similar to (*C1*), furnished to slightly lower hardness and to controlled grain size, with leveling omitted, with dull or matte finish.

(*C4*) *Deep Drawing Quality Sheet.*—Similar to (*C3*), lightly leveled to meet drawability requirements, with dull or matte finish. Tested for drawing characteristics. Also available in satin finish similar to (*C2*).

(D) *Strip, Cold-Rolled:*

(*D1*) *Annealed Strip.*—Cold rolled, annealed and leveled or coiled, with a bright finish.

(*D2*) *Spinning Quality Strip.*—Similar to (*D1*), except annealed to controlled grain size.

(*D3*) *Deep Drawing Quality Strip.*—Similar to (*D2*). Tested for drawing characteristics.

APPENDIX II

PREFERRED THICKNESS FOR WROUGHT NICKEL AND NICKEL-BASE ALLOY SHEET (0.250 IN. AND UNDER) AND STRIP (0.125 IN. AND UNDER.)

It is recommended that wherever possible material purchased to this specification be ordered in thicknesses listed as follows:

All values in inches

0.004	0.010	0.020	0.040	0.080	0.160
0.005	0.011	0.022	0.045	0.090	0.180
0.006	0.012	0.025	0.050	0.100	0.200
0.007	0.014	0.028	0.056	0.112	0.224
0.008	0.016	0.032	0.063	0.125	0.250
0.009	0.018	0.036	0.071	0.140	

SPECIFICATION FOR LEADED NICKEL BRONZE (LEADED NICKEL-SILVER) SAND CASTINGS

SB-149

(IDENTICAL WITH ASTM SPECIFICATION B 149-52 EXCEPT THAT ALLOYS NO. 10A AND 11B HAVE BEEN DELETED AND THE TITLE CORRECTED)

(Note 1.—This material is not suitable for welding or brazing)
(Note 2.—The required elongation has been raised from 8 to 12 per cent)

Scope

1. This specification covers castings of an alloy having the A.S.T.M. classification ,[1] alloy number [2] and commercial designation , and nominal composition shown in Table I.

Basis of Purchase

2. Orders for material under this specification shall include the following information:

(*1*) Alloy number (Section 1),
(*2*) Tests or certification required (Sections 5, 8, 10, 16), and
(*3*) Marking, if required (Section 14).

Manufacture

3. (*a*) The alloy may be made by any approved method. If alloys in ingot form are used, the alloy ingot selected shall have the same A.S.T.M. classification and alloy number as prescribed in this specification and shall conform to the requirements for that alloy as prescribed in the Standard Specifications for Copper-Base Alloys in Ingot Form for Sand Castings (A.S.T.M. Designation: B 30).

(*b*) The castings shall be made in accordance with such practice as to obtain the physical properties prescribed in this specification.

(*c*) The castings shall be of uniform quality.

Chemical Composition

4. The castings shall conform to the requirements as to chemical composition prescribed in Table II.

[1] Standard Classification of Cast Copper-Base Alloys (A.S.T.M. Designation: B 119).
[2] The alloy numbers are arbitrarily chosen and have no other significance.

Chemical Analysis

5. (*a*) An analysis of each melt may be required at the option of the purchaser. If the castings are made from ingot metal in accordance with the Standard Specifications for Copper-Base Alloys in Ingot Form for Sand Castings (A.S.T.M. Designation: B 30), or returns (backstock) of known composition, and if the foundry practice of the manufacturer is satisfactory to the inspector, and if melting and casting are witnessed by the inspector, he may waive further chemical analysis.

(*b*) The sample for chemical analysis shall be taken by drilling or cutting the test coupon or sprue in such a manner as to be representative of the entire cross-section.

Methods of Chemical Analysis

6. Analyses, when made, shall be performed in accordance with the Tentative Methods for Chemical Analysis of Copper-Nickel and Copper-Nickel-Zinc Alloys (A.S.T.M. Designation: E 75).

Tensile Properties

7. The material shall conform to the requirements as to tensile properties prescribed in Table III.

Pressure and Fracture Tests

8. The castings made from these alloys shall conform to such requirements as to pressure and fracture tests as may be agreed upon by the manufacturer and the purchaser and as specified in the order.

TABLE I.—NOMINAL COMPOSITIONS.

Classification and Alloy Number		Commercial Designation	Nominal Composition				
			Copper, per cent	Tin, per cent	Lead, per cent	Zinc, per cent	Nickel, per cent
Leaded Nickel Bronze (Leaded Nickel Silver)	11A	20 per cent leaded nickel silver	64.00	4.00	4.00	8.00	20.00

TABLE II.—CHEMICAL REQUIREMENTS.

Classification	Leaded Nickel Bronze (Leaded Nickel Silver)	
Alloy Number	11A	
	Min.	Max.
Copper, per cent	63.0	67.0
Tin, per cent	3.5	4.5
Lead, per cent	3.0	5.0
Zinc, per cent	remainder	
Nickel, per cent	19.5	21.5
Iron, per cent	...	1.5
Manganese, per cent	...	1.0

NOTE.—Analysis shall regularly be made for all elements designated, except zinc which shall be taken by difference

TABLE III.—TENSILE REQUIREMENTS.

Classification	Leaded Nickel Bronze (Leaded Nickel Silver)
Alloy Number	11A
Tensile strength, min., psi	30 000
Yield strength,[3] min., psi	17 000
Elongation in 2 in., min., per cent	12

[3] Yield strength shall be determined as the stress producing an elongation under load of 0.5 per cent, that is 0.01 in. in a gage length of 2 in.

Test Specimens

9. It is recommended that the test coupons and specimens for tension tests be prepared in accordance with the Tentative Recommended Practice for Tension Test Specimens for Copper-Base Alloys for Sand Castings (A.S.T.M. Designation: B 208), except that Fig. 1 of B 208 is not applicable to these alloys.

Number of Tests

10. (*a*) Three test coupons shall be poured from each melt of metal, or such groups of melts as the purchaser may specify, but in no case shall a lot consist of more than 1000 lb. of castings, except if individual castings weigh more than 1000 lb. The inspector shall witness the pouring of the test molds.

(*b*) If any test specimen shows defective machining or reveals casting defects, it may be discarded and replaced by another specimen selected by the inspector.

(*c*) The specimens shall be made and tested at the expense of the manufacturer. The inspector shall witness the testing.

(*d*) One test specimen shall be tested. If the physical requirements are met by this one test, the lot shall be accepted. If the first test specimen fails to conform to the requirements specified, the two remaining specimens shall be tested. If the average properties of the two remaining specimens conform to the requirements specified, the lot shall be accepted.

Methods of Testing

11. The tension tests shall be made in accordance with the Tentative Methods of Tension Testing of Metallic Materials (A.S.T.M. Designation: E 8).

Significance of Numerical Limits

12. For purposes of determining compliance with the specified limits for requirements of the properties listed in the following table, an observed value, or a calculated value, shall be rounded off as indicated in accordance with the rounding-off method of the Recommended Practices for Designating Significant Places in Specified Limiting Values (A.S.T.M. Designation: E 29):

Property	Rounded-Off Unit for Observed or Calculated Value
Chemical Composition	Nearest unit in the last right-hand place of figures
Tensile Strength, Yield Strength	Nearest 1000 psi.
Elongation:	
Below 5 per cent	Nearest multiple of 0.5 per cent
5 per cent and over	Nearest 1 per cent

Workmanship and Finish

13. (*a*) The castings shall be free from blowholes, porosity, hard spots, shrinkage defects or cracks, or other injurious defects and shall be smooth and well cleaned, before inspection, by sand blasting, tumbling, chipping, or other process approved by the inspector.

(*b*) The castings shall not be repaired, plugged, welded, or "burned in," unless permission from the inspector has been previously secured. This permission will be given only when the defects are such that after the approved repair the usefulness and strength of the casting has not been impaired. Each such repair shall be encircled by a ring of white paint at the time of shipment.

(*c*) All castings shall be true to pattern, free from swells, etc. Wall thicknesses shall be uniform throughout the lot of castings and all cores shall be accurately set.

(*d*) Where thick and thin sections join, the manufacturer shall be permitted to add (where not previously provided) fillets of proper size to avoid cracking upon cooling, subject to the approval of the inspector.

(*e*) The manufacturer shall not be responsible for the dimensional accuracy of patterns furnished by the purchaser.

Marking

14. Upon request of the purchaser, castings shall be marked with the pattern or mark number at a position on the castings where it will not be machined off in manufacture to finished dimensions.

Inspection

15. (*a*) Inspection may be made at the manufacturer's works or at the place of delivery. Inspection shall be made at the option of the purchaser.

(*b*) If the purchaser elects to have the inspection made at the manufacturer's works, the inspector representing the purchaser shall have free entry, at all times while work on the contract of the purchaser is being performed, to all parts of the manufacturer's works that concern the manufacture of the material ordered. The manufacturer shall afford the inspector, without charge, all reasonable facilities to satisfy him that the material is being furnished in accordance with this specification. All tests and inspection shall be so conducted as not to interfere unnecessarily with the operation of the works.

Certification

16. In the case of a product manufactured in advance and supplied for sale from stock by the manufacturer, jobber, or other dealer, the product may upon request of the purchaser be certified by the manufacturer as conforming to this specification subject to the following procedure: Not less than two tension tests, from different heats, and not less than one chemical analysis shall be made by the manufacturer from each day's melt. Records of the tension test results and chemical analysis shall be systematically made and maintained and shall be the basis for certification. In lieu of the manufacturer's certification and upon written request by the purchaser, these records may be examined by the purchaser or his accredited representative upon the manufacturer's premises

Rejection

17. Castings that show injurious defects revealed by machining operations subsequent to acceptance may be rejected, and if rejected, the foundry shall be notified within 30 days. The full weight of the original material rejected shall be returned to the foundry. The foundry shall not be responsible for the costs of machining defective castings.

SPECIFICATION FOR ALUMINUM BRONZE ROD, BAR, AND SHAPES

SB-150

(IDENTICAL WITH ASTM SPECIFICATION B 150-58)

Scope

1. This specification covers two alloys of aluminum bronze rod, bar, and shapes of any cross-section, uniform with respect to length.

NOTE 1.—Material for hot forging is covered by the Specification for Copper and Copper-Base Alloy Forging Rod, Bar, and Shapes (ASTM Designation: B 124).

General Requirements

2. Material furnished under this specification shall conform to the applicable requirements of the current edition of the Specification for General Requirements for Wrought Copper and Copper-Alloy Rod, Bar, and Shapes (ASTM Designation: B 249).

Basis of Purchase

3. Orders for material under this specification shall include the following information:

(*1*) Alloy (Section 4),

(*2*) Form: cross-section such as round, hexagonal, square, etc. (Section 8(*b*) and (*c*)),

(*3*) Diameter or distance between parallel surfaces (Section 8(*b*)),

(*4*) Length (Section 8(*d*)),

(*5*) Edge contours (Section 9),

(*6*) Piston finish rod or shafting, if required (Section 10), and

(*7*) Weight: total for each size.

Chemical Composition

4. The material shall conform to the requirements as to chemical composition prescribed in Table I.

TABLE I.—CHEMICAL REQUIREMENTS.

	Alloy No. 1	Alloy No. 2	Alloy No. 3
Copper, per cent	80.0 to 93.0	78.0 to 85.0	88.0 to 92.5
Aluminum, per cent	6.5 to 11.0	9.0 to 11.0	6.0 to 8.0
Iron, per cent	4.0 max	2.0 to 4.0	1.5 to 3.5
Nickel, per cent	1.0 max[a]	4.0 to 5.5	...
Silicon, max, per cent	2.2	0.25	...
Manganese, max, per cent	1.5	1.5	...
Tin, max, per cent	0.6	0.20	...
Zinc, max, per cent	1.0	...	...
Tellurium, max, per cent	0.6	...	...
Sum of named elements, min, per cent	99.5	99.5	99.5

[a] When both silicon and nickel are present in the alloy No. 1, only one shall be in excess of 0.25 per cent.

NOTE.—Analysis shall regularly be made only for the elements specifically mentioned in the above table. If the presence of other elements is suspected, or indicated in the course of routine analysis, further analysis shall be made either chemically or spectrographically to determine that the total of these other elements is not in excess of 0.50 per cent.

Tensile Properties

5. (*a*) The material shall conform to the requirements as to tensile properties prescribed in Table II.

(*b*) The yield strength shall be determined as the stress producing an elongation of 0.5 per cent under load, that is, 0.01 in. in a gage length of 2 in.

Mercurous Nitrate Test

6. The test specimens, cut at least 6 in. in length, shall be totally immersed for 30 min in the standard mercurous nitrate solution prescribed in the Method of Mercurous Nitrate Test for Copper and Copper Alloys (ASTM Designation: B 154) There shall be no cracks in the specimen when examined immediately after it is removed from the solution, rinsed, and wiped.

NOTE 2.—Bars which have been properly straightened or sprung will have internal stresses so broken up as not to be in danger of splitting or cracking. The mercurous nitrate test is designed to determine whether the internal stresses have been properly broken up and rendered safe.

Test Specimens

7. (*a*) In the tension test all material shall be pulled in full-size when practicable. Full-size or machined test specimens shall be as specified in the Methods of Tension Testing of Metallic Materials (ASTM Designation: E 8). (The tension test specimens shall conform to the dimensions prescribed in Sections 8, 10, 11, or 12 of Methods E 8.) Whenever tension test results are obtained from both full size and from machined test specimens and they differ, the results obtained from full size test specimens shall be used to determine conformance to the specification requirements.

(*b*) The mercurous nitrate test specimen shall be a piece of the full-size rod, bar, or shape and shall be obtained without bending, springing, polishing, or any other preparation.

Dimensions and Tolerances

8. (*a*) The dimensions and tolerances for material covered by this specification shall be as prescribed in the current edition of ASTM Specification B 249, with particular reference to Sections 8 and 9 and the following tables of that specification:

TABLE II.—TENSILE REQUIREMENTS.

Diameter or Thickness, in.	Tensile Strength, min, psi	Yield Strength, min, psi	Elongation in 4 × Diameter or Thickness of Specimen, min, per cent[a]
Alloy No. 1			
Rods and Bars:			
½ and under	80 000	40 000	9
Over ½ to 1	75 000	37 500	10
Over 1	72 000	35 000	12
Shapes, all sizes	70 000	30 000	12
Alloy No. 2			
Rounds Only:			
½ to 1 incl	100 000	50 000	5
Over 1 to 2, incl	90 000	45 000	6
Over 2 to 4, incl	85 000	42 500	10
Alloy No. 3			
Rods and Bars:			
½ and under	80 000	40 000	30
Over ½ to 1, incl	75 000	35 000	30
Over 1 to 2 incl	70 000	32 000	30

[a] In any case a minimum gage length of 1 in. shall be used.

(*b*) ***Diameter or Distance Between Parallel Surfaces:***

(*1*) *Rod: Round, Hexagonal, Octagonal.*—See Section 8(*b*), Table II.

(*2*) *Rod and Bar, As-Extruded.*—See Section 8(*b*), Table IV.

(*3*) *Round Rod, As-Hot-Rolled.*—See Section 8(*b*), Table VI.

(*4*) *Piston Finish Rod.*—See Section 8(*b*), Table III.

(*5*) *Bar: Rectangular and Square.*—Section 8(*b*), Tables IX and XI.

(*c*) ***Shapes.***—The dimensional tolerances for shapes shall be as agreed upon by the manufacturer and the purchaser, and shall be specified in the order.

(*d*) ***Length of Rod, Bar, and Shapes.***—See Section 8(*c*), Tables XII and XIV.

(*e*) ***Straightness:***

(*1*) *Rod and Bar.*—See Section 9(*a*), Table XV.

(*2*) *Shafting Rod.*—See Section 9(*b*), Table XVI.

(*3*) As-hot-rolled and as-extruded rod, bar, and shapes shall be commercially straight.

Edge Contours

9. The edge contours for material covered by this specification shall be as prescribed in Section 10 of the current edition of ASTM Specification B 249.

Piston Finish Rod and Shafting

10. (*a*) When so specified in the contract or order, round rods over ½ in. in diameter shall be furnished as piston finish rod or shafting.

(*b*) Piston finish rod shall have a special surface produced by turning or grinding and shall comply with the special diameter tolerances prescribed in Section 8(*b*), Item (*4*).

(*c*) The straightness tolerances for piston finish rod are subject to agreement between the manufacturer and the purchaser.

SPECIFICATION FOR COPPER SHEET, STRIP, PLATE, AND ROLLED BAR

SB-152

(IDENTICAL WITH ASTM SPECIFICATION B 152-60 EXCEPT THAT TYPES ETP, FRTP, STP, AND ATP, AND THE COLD-ROLLED TEMPERS HAVE BEEN DELETED)

Scope

1. This specification covers copper sheet, strip, plate and rolled bar of the following types:[3]

Type DHP.—Phosphorized copper, high residual phosphorus.

Type OF.—Oxygen-free copper without residual deoxidants.

Type DPS.—Silver-bearing copper, phosphorized.

Type OFS.—Silver-bearing copper, oxygen-free.

NOTE 1.—This specification is not intended to cover material rolled to ounce-weight thicknesses.

Plates for locomotive fireboxes are covered by the Specification for Copper Plates for Locomotive Fireboxes (ASTM Desigantion: B 11).

General Requirements

2. Material furnished under this specification shall conform to the applicable requirements of the current edition of the Specification for General Requirements for Wrought Copper and Copper-Alloy Plate, Sheet, Strip, and Rolled Bar (ASTM Designation: B 248).

Basis of Purchase

3. Orders for material under this specification shall include the following information:

(*1*) Type of copper (Section 1). When types DPS, or OFS, the amount of silver in ounces per ton,

(*2*) Temper (Section 7),

(*3*) Dimensions: thickness, width, and weight (Section 14(*b*), (*c*), and (*f*),

[3] These types of copper are classified in the Classification of Coppers (ASTM Designation: B 224).

TABLE I.—CHEMICAL REQUIREMENTS.

Type	Copper (plus Silver), min, per cent	Phosphorus, per cent	Arsenic, per cent	Silver, per cent	Antimony, max, per cent	Selenium plus Tellurium, max, per cent	Nickel, max, per cent	Bismuth, max, per cent	Lead, max, per cent
DHP	99.90	0.015 to 0.040	...	...	...	...	...	...	...
OF	99.92	...	...	...	...	...	...	...	...
DPS	99.90	0.040 max	...	[a]	...	...	...	...	...
OFS	99.90	...	...	[a]	...	...	...	...	...

[a] Silver-bearing copper may be either Lake copper or produced from types DHP, or OF by the addition of the required amount of silver. The silver content is normally specified in troy ounces per a avoirdupois ton (1 oz per ton is equivalent to 0.0034 per cent). The desired minimum silver content must be specified.

When the type of silver-bearing copper is not specified (that is, whether tough pitch, phosphorized, or oxygen-free) any one of the three types may be supplied at the option of the manufacturer.

TABLE II.—TENSILE STRENGTH REQUIREMENTS AND APPROXIMATE ROCKWELL HARDNESS VALUES FOR ROLLED TEMPERS.

Temper	Tensile Strength, psi		Approximate Rockwell Hardness[a]			
			F Scale		Superficial 30-T	
	Min	Max	Min	Max	Min	Max
Hot-Rolled Tempers:						
Hot-rolled	30 000	38 000	...	75	...	41
Hot-rolled and annealed	30 000	38 000	...	65	...	31

[a] Rockwell hardness values apply as follows: The F scale applies to metal 0.020 in. and over in thickness. The Superficial 30-T scale applies to metal 0.012 in. and over in thickness.

(*4*) Whether the resistivity test is required for type OF (Section 13),

(*5*) Embrittlement test (Section 12),

(*6*) How furnished: flat or rolls,

(*7*) Length (Section 14(*d*)),

(*8*) Weight: total for each size, and also weights per roll of special sizes of roll.

Chemical Composition

4. The material shall conform to the requirements as to chemical composition prescribed in Table I.

Tempers of Hot-Rolled Sheet and Plate

7. The temper of hot-rolled copper sheet and plate shall be that produced by hot-rolling. The temper of hot-rolled and annealed copper sheet and plate shall be that produced by hot-rolling and subsequent annealing.

Tensile Properties of Hot-Rolled Tempers

8. The tension test shall be the standard test for all tempers of hot-rolled copper sheet, strip, plate, and rolled bar, and acceptance or rejection shall depend only on the tensile strength, which shall conform to the requirements prescribed in Table II. Tension test specimens shall be taken so that the longitudinal axis of such specimens is parallel to the direction of rolling.

Rockwell Hardness

10. Since Rockwell hardness tests offer a quick and convenient method of checking copper of any temper for general conformity to the requirements for tensile strength or grain size, the approximate Rockwell hardness values for each temper are given in Table II or Table III for general information and assistance in testing.

Microscopic Examination

11. The samples of types DHP, OF, DPS, and OFS shall be free from cuprous oxide as determined by microscopic examination at 75× magnification.

Embrittlement Test

12. It is to be expected that samples of types DHP, OF, DPS, and OFS will pass the following embrittlement test, although the actual performance of the test is not mandatory under the terms of this specification unless definitely specified: Suitable test specimens shall be heated to a temperature of 800 to 875 C for a period of 20 min in a furnace containing an atmosphere of hydrogen. After their removal from the furnace the specimens shall be polished, etched if desired, and examined under a microscope at a magnification of 75 to 200 diameters, inclusive. The specimens shall not show gassing or open grain structure characteristic of embrittlement.

Electrical Resistivity

13. (*a*) When specified in the order, the electrical resistivity determined on samples of type OF copper shall not exceed the following limits when tested at a temperature of 20 C (68 F):

Condition	Electrical Resistivity, max, ohm—gram/meter[2]
Soft (annealed)	0.15328

NOTE 3.—The International Annealed Copper Standard electrical conductivity equivalents are as follows:

Electrical Resistivity, ohm—gram/meter[2]	Conductivity, per cent
0.15328	100.00

(*b*) The electrical resistivity of the material shall be determined in accordance with the Method of Test for Resistivity of Electrical Conductor Materials (ASTM Designation: B 193).

Dimensions and Tolerances

14. (*a*) The dimensions and tolerances for material covered by this specification shall be as prescribed in the current edition of ASTM Specification B 248, with particular reference to Section 8 and the following tables of that specification:

(*b*) ***Thickness.***—See Section 8(*b*), Table I.

(*c*) ***Width:***

(*1*) *Slit Metal and Slit Metal with Rolled Edges.*—See Section 8(*c*), Table IV.

(*2*) *Square-Sheared Metal.*—See Section 8(*c*), Table V.

(*3*) *Sawed Metal.*—See Section 8(*c*), Table VI.

(*d*) ***Length:***

(*1*) *Specific and Stock Lengths with and Without Ends.*—See Section 8(*d*), Table VII.

(*2*) *Schedule of Lengths (Specific and Stock) with Ends.*—See Section 8(*d*), Table VIII.

(*3*) *Length Tolerances for Square-Sheared Metal.*—See Section 8(*d*), Table XIV.

(*4*) *Length Tolerances for Sawed Metal.*—See Section 8(*d*), Table XV.

(*e*) ***Straightness:***

(*1*) *Slit Metal.*—See Section 8(*e*), Table IX.

(*2*) *Edge-Rolled Metal.*—See Section 8(*e*), Table X.

(*3*) *Square-Sheared Metal.*—See Section 8(*e*), Table XI.

(*4*) *Sawed Metal.*—See Section 8(*e*), Table XII.

(*f*) ***Weight:*** Hot-rolled sheet and plate.—See Section 8(*f*), Table XIII.

SPECIFICATION FOR NICKEL ROD AND BAR

SB-160

(IDENTICAL WITH ASTM SPECIFICATION B 160-61)

Scope

1. (*a*) This specification covers nickel in the form of hot-finished and cold-drawn rounds, squares, hexagons and rectangles, in one grade and two carbon levels as shown in Section 5.

(*b*) *Definitions.*—The terms rod and bar as used in this specification apply to the following:

Rod includes material of round solid section furnished in straight lengths.

Bar includes material of rectangular (flats), hexagonal or square solid section up to and including 10 in. in width and $\frac{1}{4}$ in. and over in thickness in straight lengths.

NOTE 1.—At the manufacturer's option, hot-finished rectangles in widths 10 in. and under may be furnished as hot-rolled plate with sheared or cut edges in accordance with the Specification for Nickel Plate, Sheet, and Strip (ASTM Designation: B 162), providing the mechanical property requirements of Specification B 160 are met.

(*c*) It should be understood that this specification is general. Provision is made herein for material suitable for hot- and cold-working operations, machining, and all other common methods of fabrication. Since the material may be used for purposes where the requirements of the operations are too particular to be prescribed in the general specification, it is advisable in these instances for the purchaser to submit samples or detailed information to the manufacturer and secure an adjustment of processing to suit the actual conditions for which the material is intended (see Section 16).

Basis of Purchase

2. Orders for material under this specification shall include information with respect to the following (see Appendix I) and shall state whether nickel or low-carbon nickel is desired. Nickel will be furnished unless low-carbon nickel is specified.

(*a*) *Condition (Temper).*—Hot-finished, cold-drawn, annealed or forging quality (Section 1, Table 1, Appendix I).

(*b*) *Finish.*—Hot-finished, rough-turned, smooth-forged, semi-smooth machined, smooth-finish machined, cold-drawn, annealed, bright-annealed, or annealed and pickled (Section 1, Table I, Appendix I).

(*c*) *Section.*—Rod (round) or bar (square, hexagon, or rectangle).

(*d*) *Dimensions.*—Dimensions including length (Section 14, Tables II to V, incl).

(*e*) *Special Requirements.*—State nature and details of requirements (Section 16).

(*f*) *Certification and Inspection.*—State at the time the order is placed which of the following options, if any, is desired:

(*1*) Furnish *Certificate of Compliance* (includes chemical analyses and certification of compliance but does not include mechanical properties) (Section 19 (*b*)).

(*2*) Furnish *Test Reports* (includes chemical analyses and mechanical properties) (Section 19 (*c*)).

(*3*) *Samples for Check Analysis.*—Whether samples for check analysis shall be furnished (Section 19 (*d*)).

(*4*) *Inspection at Place of Manufacture.*—Which tests are to be witnessed (Section 19 (*e*)).

Material

3. The material shall be of such quality that the finished product shall have the chemical composition, properties and characteristics described in this specification.

Manufacture

4. (*a*) Rod and bar shall be produced by hot-working, annealing, pickling, cold-working, turning, grinding, reannealing, or by any combination of these processes.

(*b*) Rod and bar shall be produced to the carbon level, condition (temper), finish, and dimensions specified.

Chemical Composition

5. The materials shall conform to the following requirements as to chemical composition:[a]

	Nickel	Low-Carbon Nickel
Nickel,[b] min, per cent	99.0	99.0
Copper, max, per cent	0.25	0.25
Iron, max, per cent	0.40	0.40
Manganese, max, per cent	0.35	0.35
Carbon, max, per cent	0.15	0.02
Silicon, max, per cent	0.35	0.35
Sulfur, max, per cent	0.01	0.01

[a] For applicable rounding-off procedures, see Section 13(*b*).

[b] Cobalt counting as nickel.

Samples for Chemical Analysis

6. (*a*) Unless otherwise agreed upon by the manufacturer and the purchaser, heat (ladle) analyses furnished by the manufacturer shall be accepted as defining the composition of the material furnished.

(*b*) If samples for check analysis are desired, they shall be so specified by the purchaser, at the time of placement of the order. Samples shall be taken from material representative of each 5,000 lb, or fraction thereof, of the finished material, and shall conform to the requirements of Section 5.

(*c*) Such samples for chemical analysis shall be taken in accordance with the procedure described in the Method of Sampling Wrought Non-Ferrous Metals and Alloys for Determination of Chemical Composition (ASTM Designation: E 55). The lot size, portion size and selection of pieces shall be as follows:

Lot Size.—5,000 lb, or fraction thereof, of finished material.

Portion Size.—Pieces from four individual lengths of finished material. If the lot consists of less than four lengths, a piece shall be taken from each individual length.

Minimum Weight of Composite Sample.—150 g divided into three equal parts, one for the manufacturer, one for the purchaser, and one for an umpire, if necessary.

TABLE I.—MECHANICAL PROPERTIES[a] OF RODS AND BARS.

Condition and Diameter or Distance Between Parallel Surfaces, in.	Tensile Strength min, psi	Yield Strength (0.2 per cent offset), min, psi	Elongation in 2 in., min, per cent
NICKEL			
Cold-drawn (as drawn):			
Rounds, 1 and under	80 000	60 000	10[e]
Rounds, over 1 to 4, incl	75 000	60 000	15
Squares, hexagons, and rectangles, all sizes	65 000	40 000	25[e]
Hot-finished:			
All sections, all sizes	60 000	15 000	35[e]
Rings and disks[f]	...	...	...
Annealed			
Rods and bars, all sizes	55 000	15 000	40[e]
Rings and disks[g]	...	...	...
Forging quality (for reforging):			
All sizes	[b]	[b]	[b]
LOW-CARBON NICKEL			
Hot-finished:			
All sections, all sizes	50 000	10 000	40[e]
Annealed:			
All products, all sizes	50 000	10 000	40[e]

[a] For applicable rounding-off procedures, see Section 13(*b*).

[b] Forging quality rods are furnished to chemical requirements and surface inspection only. No tensile properties are required.

[c] For hot-finished flats $\frac{5}{16}$ in. and under in thickness the elongation shall be 25 per cent, min.

[d] See Section 13(*c*).

[e] Not applicable to diameters or cross-sections under $\frac{3}{32}$ in.

[f] Hardness B 45 to B 80, or equivalent.

[g] Hardness B 45 to B 70, or equivalent.

(*d*) Samples for check analyses, when requested after the date of placement of the order, shall be as agreed upon between the manufacturer and the purchaser.

Lots for Mechanical Testing

7. Unless otherwise specified, a lot shall consist of material from one heat of the same condition (temper), finish, and cross-section in a shipment, and in no case more than 30,000 lb in weight.

NOTE 2.—Where material cannot be identified by heat, a lot shall consist of not more than 500 lb of material in the same size and condition (temper).

Sampling for Mechanical Tests

8. (*a*) Samples of the material to provide test specimens for mechanical tests shall be taken from such locations in each lot as to be representative of that lot.

(*b*) When samples are to be taken after delivery, the purchaser of material ordered to cut lengths may arrange with the manufacturer to have an excess length furnished or request on the order additional material of adequate size to provide sample coupons for inspection purposes.

Mechanical Properties

9. The material shall conform to the requirements as to mechanical properties prescribed in Table I.

Hardness

10. There are no hardness requirements for this material except for hot-finished rings and disks. Where hardness values are desirable, they shall be as agreed upon between the manufacturer and the purchaser.

Test Specimens

11. (*a*) Tension test specimens shall be taken from finished material and tested in the direction of fabrication.

(*b*) All rod and bar shall be tested in full size when practicable. When a machined specimen becomes necessary, it shall be prepared to the form and dimensions of the test specimen shown in Fig. 8 in the Methods of Tension Testing of Metallic Materials (ASTM Designation: E 8). Flats that are too thin to obtain specimens per Fig. 8 of Methods E 8, and which are too wide to be pulled full size, shall be tested from machined specimens per Figs. 6 and 7 of Methods E 8.

(*c*) For material $1\frac{1}{2}$ in. and under in diameter or thickness, the axis of the test specimen shall coincide with the central axis of the piece. For material over $1\frac{1}{2}$ in. in diameter or thickness, the axis shall be located midway between the center and surface of the piece.

Number of Tests

12. Unless otherwise specified, one tension test shall be made on each lot, as defined in Section 7.

Methods of Testing and Chemical Analysis

13. (*a*) The chemical compositions and mechanical properties of the materials as enumerated in this specification shall be determined in case of disagreement, in accordance with the following methods of the American Society for Testing Materials:

Test	ASTM Designation[a]
Chemical Analysis	E 39
Tension	E 8
Brinell Hardness	E 10
Rockwell Hardness	E 18
Hardness Conversion	E 140
Rounding-off Procedure	E 29
Method of Sampling	E 55

[a] These designations refer to the following methods of testing:

E 39, Methods for Chemical Analysis of Nickel,

E 8, Methods of Tension Testing of Metallic Materials,

E 10, Methods of Test for Brinell Hardness Metallic Materials,

E 18, Methods of Test for Rockwell Hardness and Rockwell Superficial Hardness of Metallic Materials,

E 140, Hardness Conversion Tables for Metals (Relationship between Diamond Pyramid Hardness, Brinell Hardness and Rockwell Hardness),

E 29, Recommended Practices for Designating Significant Places in Specified Limits, and

E 55, Method of Sampling Wrought Non-Ferrous Metals and Alloys for Determination of Chemical Composition.

(*b*) For purposes of determining compliance with the specified limits for requirements of the properties listed in the following table, an observed value or a calculated value shall be rounded off as indicated below, in accordance with the rounding-off method of Recommended Practices E 29.

Test	Rounded-off Unit for Observed or Calculated Value
Chemical composition, hardness, and tolerances (when expressed in decimals)	nearest unit in the last right-hand place of figures of the specified limit.
Tensile strength, yield strength	nearest 1000 psi.
Elongation	nearest 1 per cent.

(*c*) In lieu of the offset method the minimum yield strength may be determined as the stress required to produce the elongation under load as calculated by the following formula:

$$X = \left(\frac{Y}{Z} + 0.002\right) \times \text{gage length in inches}$$

where:

X = the limiting extension under load, inches,
Y = specified yield strength at 0.2 per cent offset, from Table I, and
Z = modulus of elasticity (30,000,000 psi).

In case of dispute the offset method shall be used as the referee procedure.

NOTE 3.—In order that the hardness determinations may be in reasonably close agreement, the following procedure is suggested:

(*1*) For round rod, under ½ in. in diameter, hardness readings shall be taken on a flat surface prepared by filing or grinding approximately 1/64 in. from the outside surface of the rod.

(*2*) For round rod, ½ in. in diameter and larger, and for hexagons, squares and rectangles, all sizes, hardness readings shall be taken on a cross-section midway between the surface and center of the section.

Permissible Variations in Dimensions

14. (*a*) *Diameter, Thickness, or Width.*—The permissible variations from the specified dimensions as measured on the diameter or between parallel surfaces of cold-drawn rod and bar shall be as prescribed in Table II, and of hot-finished rod and bar as prescribed in Table III.

(*b*) *Out-of-Round.*—Hot-finished rounds and cold-drawn rounds (except "forging quality") in straight lengths, shall not be out-of-round by more than one-half the total permissible variations in diameter shown in Tables II and III, except for hot-finished rounds ½ in. in diameter and under, which may be out-of-round by the total permissible variations in diameter shown in Table III.

(*c*) *Corners.*—Cold-drawn hexagons, squares and rectangles will have practically exact angles and sharp corners.

TABLE II.—PERMISSIBLE VARIATIONS IN DIAMETER OR DISTANCE BETWEEN PARALLEL SURFACES OF COLD-DRAWN RODS AND BARS.

Specified Dimension, in.[a]	Permissible Variations Under Specified Dimension, in.[b]
Rounds:	
1/16 to 3/16, excl	0.002
3/16 to ½, excl	0.003
½ to 15/16, incl	0.002
Over 15/16 to 1 15/16, incl	0.003
Over 1 15/16 to 2½, incl	0.004
Over 2½ to 3, incl	0.005
Over 3 to 3½, incl	0.006
Over 3½ to 4, incl	0.007
Hexagons, Squares, Rectangles:	
1/16 to 3/16, excl	0.002
3/16 to 15/16, incl	0.003
Over 15/16 to 1½, incl	0.004
Over 1½ to 2, incl	0.005
Over 2 to 2¾, incl	0.006
Over 2¾ to 4, incl	0.007

[a] Dimensions apply to diameter of rounds, to distance across flats of hexagons and squares, and separately to width and thickness of rectangles.

[b] For the applicable rounding-off procedure, see Section 13(*b*).

(*d*) *Machining Allowances for Hot-Finished Materials.*—When the surfaces of hot-finished products are to be machined the allowances prescribed in Table IV are recommended for normal machining operations.

(*e*) *Length.*—The permissible variations in length of cold-drawn and hot-finished rod and bar shall be as prescribed in Table V.

Unless otherwise specified, random mill lengths will be furnished. Rods and bars ordered to random or nominal lengths will be furnished with either cropped or saw-cut ends; material ordered to cut lengths will be furnished with square saw-cut or machined ends. Where rod and bar are ordered in multiple lengths, ⅛ in. will be allowed for each multiple cut, unless otherwise specified.

(*f*) *Weight.*—The material covered by this specification shall be assumed to weigh 0.321 lb per cu in.

Straightness

15. (*a*) The permissible variations in straightness of cold-drawn rods and bars as determined by the departure from true straightness (throw in one revolution or depth of chord) shall be as prescribed in Table VI.

TABLE III.—PERMISSIBLE VARIATIONS IN DIAMETER OR DISTANCE BETWEEN PARALLEL SURFACES OF HOT-FINISHED RODS AND BARS.

Specified Dimension, in.[a]	Permissible Variations from Specified Dimension, in.[b]	
	Plus	Minus
Rod and bar, hot-finished:		
1 and under	0.016	0.016
Over 1 to 2, incl	0.031	0.016
Over 2 to 4, incl	0.047	0.031
Over 4	0.125	0.063
Round rod, hot-finished, semi-smooth machined, over 4 in	0.031	0
Round rod, hot-finished and rough-turned, 1 in. and over	0.031	0
Round rod, hot-finished, smooth-finish machined, over 4 in	0	0.005[c]
Forging quality rounds:[d]		
Under 1	0.005	0.005[d]
1 and over	0.031	0[d]

[a] Dimensions apply to diameter of rounds, to distance across flats of hexagons and squares, and separately to width and thickness of rectangles.

[b] For the applicable rounding-off procedure, see Section 13(*b*).

[c] Permissible variations available as plus 0.005 in., minus 0; or plus 0.0025 in., minus 0.0025 in. when so specified.

[d] Spot grinding may be permitted to remove minor surface defects. The depth of these spot ground areas shall not exceed 3 per cent of the diameter of the rod.

(*b*) The permissible variations in straightness of precision straightened cold-drawn round rod and shafting as determined by the departure from straightness (throw in one revolution) in lengths as indicated shall be as prescribed in Table VII.

(*c*) In determining straightness in the standard 42-in. distance between supports or, when specified, in determining straightness in lengths not in excess of those shown in Table VII, the rod shall be placed on a precision table equipped with ball-bearing rollers and a micrometer or dial indicator. The rod shall then be rotated slowly against the indicator, and the deviation from straightness in any portion of the rod between the supports shall not exceed the permissible variations prescribed in Tables VI and VII. The deviation from straightness (throw in one revolution) is defined as the difference between the maximum and minimum readings of the dial indicator in one complete revolution of the rod.

(*d*) The permissible variations in straightness of hot-finished rods and bars as determined by the departure from straightness (throw in one revolution or depth of chord) shall be as specified in Table VIII.

Special Requirements

16. (*a*) Special tolerances other than those specified herein shall be as agreed upon by the manufacturer and the purchaser.

TABLE IV.—NORMAL MACHINING ALLOWANCES FOR HOT-FINISHED MATERIAL.

Finish-Machined Dimensions, in. for Conditions as Indicated Below[a]	Normal Machining Allowance, in.			
	On Diameter, for Rounds	Across Flats, for Hexagons, Squares	For Rectangles	
			On Thickness	On Width
Hot-Finished:[b]				
Up to 7/8, incl	1/8	1/8	1/8	3/16
Over 7/8 to 1 7/8, incl	1/8	3/16	1/8	3/16
Over 1 7/8 to 2 7/8, incl	1/8	1/4	...	3/16
Over 2 7/8 to 3 13/16, incl	3/16	...	...	3/16
Over 3 13/16	7/16	...	...	3/8
Hot-Finished Rounds:				
Rough-Turned:[c]				
15/16 to 4, incl, in diameter	1/16	...	...	...
Over 4 to 12, incl, in diameter	1/8	...	...	...
Semi-Smooth Machined				
Over 4 to 10, incl	1/8[d]	...	...	...

[a] Dimensions apply to the diameter of rounds, distance across flats of squares and hexagons, and separately to width and thickness of rectangles.

[b] The allowances for hot-finished material in Table IV are recommended for rounds machined in lengths of 3 ft or less and for squares, hexagons and rectangles machined in lengths of 2 ft or less. Hot-finished material to be machined in longer lengths should be specified showing the finished cross-sectional dimension and the length in which the material will be machined in order that the manufacturer may supply material with sufficient oversize, including allowance for out-of-straightness.

[c] Applicable to 3 ft max length.

[d] Applicable to 30 ft max lengths.

TABLE V.—PERMISSIBLE VARIATIONS IN LENGTH OF RODS AND BARS.

Random mill lengths:	
Hot-finished	6 to 24 ft long with not more than 25 per cent by weight between 6 and 9 ft, except for sections weighing over 25 lb per ft, and smooth forged products, all sections, short lengths down to 2 ft may be furnished.
Cold-drawn	6 to 20 ft long with not more than 25 per cent, by weight between 6 and 10 ft.
Multiple lengths	Furnished in multiples of a specified unit length, within the length limits indicated above. For each multiple, an allowance of ¼ in. will be made for cutting, unless otherwise specified. At the manufacturer's option, individual specified unit lengths may be furnished.
Nominal lengths	Specified nominal lengths having a range of not less than 2 ft, with no short lengths allowed.[a]
Cut lengths	A specified length to which all rods will be cut with a permissible variation of plus 1/16 in., minus 0 for sizes 8 in. and less in diameter or distance across flats. For larger sizes, the permissible variation shall be plus ¼ in., minus 0.

[a] For cold-drawn rods and bars under ½ in. in diameter or distance across flats ordered to nominal or stock lengths with a 2-ft range, at least 93 per cent of such material shall be within the range specified, the balance may be in shorter lengths but in no case shall lengths less than 4 ft be furnished.

(*b*) Special variations in analysis, test procedures, tolerances, mechanical properties and quality requirements not covered by this specification shall be as agreed upon by the manufacturer and the purchaser.

(*c*) When material is intended for nuclear applications and other critical end uses, the manufacturer shall be notified at the time of placement of the inquiry or order to determine if material of quality and inspection procedures normally employed for commercial material to this specification are adequate. In the event that more critical quality or more rigid inspection standards are indicated, the manufacturer and the purchaser shall agree upon such standards prior to production.

Workmanship and Finish

17. The material shall be uniform in quality and condition, smooth, commercially straight or flat, and free from injurious defects.

Marking

18. Unless otherwise specified, each bundle or shipping container shall be marked with the name of the material, this specification number, the size, gross, tare and net weight, consignor and consignee address, contract or order number, or such other information as may be defined in the contract or order.

Certification and Inspection

19. (*a*) Unless otherwise agreed upon between the manufacturer and the purchaser, certification shall be based on one of the options described in Paragraphs (*b*) and (*c*). The option desired shall be specified on the individual purchase order (Section 2 (*f*)). In the event that neither of the above options is specified, the basis for acceptance or rejection shall be based on the provisions described in Paragraph (*b*).

(*b*) *Certificate of Compliance.*—The Certificate of Compliance shall consist of the results of the chemical (ladle) analyses of each heat in a shipment and a statement to the effect that material complies with requirements of the specification, based on available production data. No mechanical properties will be furnished on such certificates.

NOTE 4.—In the event results of both chemical analyses and mechanical property tests are desired see Section 19(*c*).

TABLE VI.—PERMISSIBLE VARIATIONS IN STRAIGHTNESS OF COLD-DRAWN RODS AND BARS.

Specified Diameter or Distance Between Parallel Surfaces, in.	Permissible Variations in Lengths Indicated, in.
Rounds:	throw in one revolution:
15/16 and under	0.020 in 42-in. length
Over 15/16 to 4, incl	0.015 in 42-in. length
Squares, hexagons, rectangles:	depth of chord:
All sizes	0.025 per foot of length

Test	Rounded-off Unit for Observed or Calculated Value
Chemical composition, hardness, and tolerances (when expressed in decimals)	nearest unit in the last right-hand place of figures of the specified limit.
Tensile strength, yield strength	nearest 1000 psi.
Elongation	nearest 1 per cent.

(*c*) In lieu of the offset method the minimum yield strength may be determined as the stress required to produce the elongation under load as calculated by the following formula:

$$X = \left(\frac{Y}{Z} + 0.002\right) \times \text{gage length in inches}$$

where:

X = the limiting extension under load, inches,
Y = specified yield strength at 0.2 per cent offset, from Table I, and
Z = modulus of elasticity (30,000,000 psi).

In case of dispute the offset method shall be used as the referee procedure.

NOTE 3.—In order that the hardness determinations may be in reasonably close agreement, the following procedure is suggested:

(*1*) For round rod, under ½ in. in diameter, hardness readings shall be taken on a flat surface prepared by filing or grinding approximately 1/16 in. from the outside surface of the rod.

(*2*) For round rod, ½ in. in diameter and larger, and for hexagons, squares and rectangles, all sizes, hardness readings shall be taken on a cross-section midway between the surface and center of the section.

Permissible Variations in Dimensions

14. (*a*) *Diameter, Thickness, or Width.*—The permissible variations from the specified dimensions as measured on the diameter or between parallel surfaces of cold-drawn rod and bar shall be as prescribed in Table II, and of hot-finished rod and bar as prescribed in Table III.

(*b*) *Out-of-Round.*—Hot-finished rounds and cold-drawn rounds (except "forging quality") in straight lengths, shall not be out-of-round by more than one-half the total permissible variations in diameter shown in Tables II and III, except for hot-finished rounds ½ in. in diameter and under, which may be out-of-round by the total permissible variations in diameter shown in Table III.

(*c*) *Corners.*—Cold-drawn hexagons, squares and rectangles will have practically exact angles and sharp corners.

TABLE II.—PERMISSIBLE VARIATIONS IN DIAMETER OR DISTANCE BETWEEN PARALLEL SURFACES OF COLD-DRAWN RODS AND BARS.

Specified Dimension, in.[a]	Permissible Variations Under Specified Dimension, in.[b]
Rounds:	
1/16 to 3/16, excl	0.002
3/16 to ½, excl	0.003
½ to 1 5/16, incl	0.002
Over 1 5/16 to 1 15/16, incl	0.003
Over 1 15/16 to 2½, incl	0.004
Over 2½ to 3, incl	0.005
Over 3 to 3½, incl	0.006
Over 3½ to 4, incl	0.007
Hexagons, Squares, Rectangles:	
1/16 to 3/16, excl	0.002
3/16 to 1 5/16, incl	0.003
Over 1 5/16 to 1½, incl	0.004
Over 1½ to 2, incl	0.005
Over 2 to 2¾, incl	0.006
Over 2¾ to 4, incl	0.007

[a] Dimensions apply to diameter of rounds, to distance across flats of hexagons and squares, and separately to width and thickness of rectangles.

[b] For the applicable rounding-off procedure, see Section 13(*b*).

(*d*) *Machining Allowances for Hot-Finished Materials.*—When the surfaces of hot-finished products are to be machined the allowances prescribed in Table IV are recommended for normal machining operations.

(*e*) *Length.*—The permissible variations in length of cold-drawn and hot-finished rod and bar shall be as prescribed in Table V.

Unless otherwise specified, random mill lengths will be furnished. Rods and bars ordered to random or nominal lengths will be furnished with either cropped or saw-cut ends; material ordered to cut lengths will be furnished with square saw-cut or machined ends. Where rod and bar are ordered in multiple lengths, ¼ in. will be allowed for each multiple cut, unless otherwise specified.

(*f*) *Weight.*—The material covered by this specification shall be assumed to weigh 0.321 lb per cu in.

Straightness

15. (*a*) The permissible variations in straightness of cold-drawn rods and bars as determined by the departure from true straightness (throw in one revolution or depth of chord) shall be as prescribed in Table VI.

TABLE III.—PERMISSIBLE VARIATIONS IN DIAMETER OR DISTANCE BETWEEN PARALLEL SURFACES OF HOT-FINISHED RODS AND BARS.

Specified Dimension, in.[a]	Permissible Variations from Specified Dimension, in.[b]	
	Plus	Minus
Rod and bar, hot-finished:		
1 and under	0.016	0.016
Over 1 to 2, incl	0.031	0.016
Over 2 to 4, incl	0.047	0.031
Over 4	0.125	0.063
Round rod, hot-finished, semi-smooth machined, over 4 in	0.031	0
Round rod, hot-finished and rough-turned, 1 in. and over	0.031	0
Round rod, hot-finished, smooth-finish machined, over 4 in	0	0.005[c]
Forging quality rounds:[d]		
Under 1	0.005	0.005[d]
1 and over	0.031	0[d]

[a] Dimensions apply to diameter of rounds, to distance across flats of hexagons and squares, and separately to width and thickness of rectangles.

[b] For the applicable rounding-off procedure, see Section 13(*b*).

[c] Permissible variations available as plus 0.005 in., minus 0; or plus 0.0025 in., minus 0.0025 in. when so specified.

[d] Spot grinding may be permitted to remove minor surface defects. The depth of these spot ground areas shall not exceed 3 per cent of the diameter of the rod.

(*b*) The permissible variations in straightness of precision straightened cold-drawn round rod and shafting as determined by the departure from straightness (throw in one revolution) in lengths as indicated shall be as prescribed in Table VII.

(*c*) In determining straightness in the standard 42-in. distance between supports or, when specified, in determining straightness in lengths not in excess of those shown in Table VII, the rod shall be placed on a precision table equipped with ball-bearing rollers and a micrometer or dial indicator. The rod shall then be rotated slowly against the indicator, and the deviation from straightness in any portion of the rod between the supports shall not exceed the permissible variations prescribed in Tables VI and VII. The deviation from straightness (throw in one revolution) is defined as the difference between the maximum and minimum readings of the dial indicator in one complete revolution of the rod.

(*d*) The permissible variations in straightness of hot-finished rods and bars as determined by the departure from straightness (throw in one revolution or depth of chord) shall be as specified in Table VIII.

Special Requirements

16. (*a*) Special tolerances other than those specified herein shall be as agreed upon by the manufacturer and the purchaser.

(*b*) Special variations in analysis, test procedures, tolerances, mechanical properties and quality requirements not covered by this specification shall be as agreed upon by the manufacturer and the purchaser.

(*c*) When material is intended for nuclear applications and other critical end uses, the manufacturer shall be notified at the time of placement of the inquiry or order to determine if material of quality and inspection procedures normally employed for commercial material to this specification are adequate. In the event that more critical quality or more rigid inspection standards are indicated, the manufacturer and the purchaser shall agree upon such standards prior to production.

TABLE IV.—NORMAL MACHINING ALLOWANCES FOR HOT-FINISHED MATERIAL.

Finish-Machined Dimensions, in. for Conditions as Indicated Below[a]	Normal Machining Allowance, in.			
	On Diameter, for Rounds	Across Flats, for Hexagons, Squares	For Rectangles	
			On Thickness	On Width
Hot-Finished:[b]				
Up to 7/8, incl	1/8	1/8	1/8	3/16
Over 7/8 to 1 7/8, incl	1/8	3/16	1/8	3/16
Over 1 7/8 to 2 7/8, incl	1/8	1/4	...	3/16
Over 2 7/8 to 3 13/16, incl	3/16	...	...	3/16
Over 3 13/16	3/16	...	...	3/8
Hot-Finished Rounds:				
Rough-Turned:[c]				
15/16 to 4, incl, in diameter	1/16	...	...	...
Over 4 to 12, incl, in diameter	1/8	...	...	...
Semi-Smooth Machined				
Over 4 to 10, incl	1/8[d]	...	...	...

[a] Dimensions apply to the diameter of rounds, distance across flats of squares and hexagons, and separately to width and thickness of rectangles.

[b] The allowances for hot-finished material in Table IV are recommended for rounds machined in lengths of 3 ft or less and for squares, hexagons and rectangles machined in lengths of 2 ft or less. Hot-finished material to be machined in longer lengths should be specified showing the finished cross-sectional dimension and the length in which the material will be machined in order that the manufacturer may supply material with sufficient oversize, including allowance for out-of-straightness.

[c] Applicable to 3 ft max length.

[d] Applicable to 30 ft max lengths.

TABLE V.—PERMISSIBLE VARIATIONS IN LENGTH OF RODS AND BARS.

Random mill lengths:	
Hot-finished	6 to 24 ft long with not more than 25 per cent by weight between 6 and 9 ft, except for sections weighing over 25 lb per ft, and smooth forged products, all sections, short lengths down to 2 ft may be furnished.
Cold-drawn	6 to 20 ft long with not more than 25 per cent, by weight between 6 and 10 ft.
Multiple lengths	Furnished in multiples of a specified unit length, within the length limits indicated above. For each multiple, an allowance of ¼ in. will be made for cutting, unless otherwise specified. At the manufacturer's option, individual specified unit lengths may be furnished.
Nominal lengths	Specified nominal lengths having a range of not less than 2 ft, with no short lengths allowed.[a]
Cut lengths	A specified length to which all rods will be cut with a permissible variation of plus 1/8 in., minus 0 for sizes 8 in. and less in diameter or distance across flats. For larger sizes, the permissible variation shall be plus ¼ in., minus 0.

[a] For cold-drawn rods and bars under ½ in. in diameter or distance across flats ordered to nominal or stock lengths with a 2-ft range, at least 93 per cent of such material shall be within the range specified, the balance may be in shorter lengths but in no case shall lengths less than 4 ft be furnished.

Marking

18. Unless otherwise specified, each bundle or shipping container shall be marked with the name of the material, this specification number, the size, gross, tare and net weight, consignor and consignee address, contract or order number, or such other information as may be defined in the contract or order.

Certification and Inspection

19. (*a*) Unless otherwise agreed upon between the manufacturer and the purchaser, certification shall be based on one of the options described in Paragraphs (*b*) and (*c*). The option desired shall be specified on the individual purchase order (Section 2 (*f*)). In the event that neither of the above options is specified, the basis for acceptance or rejection shall be based on the provisions described in Paragraph (*b*).

(*b*) *Certificate of Compliance.*—The Certificate of Compliance shall consist of the results of the chemical (ladle) analyses of each heat in a shipment and a statement to the effect that material complies with requirements of the specification, based on available production data. No mechanical properties will be furnished on such certificates.

NOTE 4.—In the event results of both chemical analyses and mechanical property tests are desired see Section 19(*c*).

TABLE VI.—PERMISSIBLE VARIATIONS IN STRAIGHTNESS OF COLD-DRAWN RODS AND BARS.

Specified Diameter or Distance Between Parallel Surfaces, in.	Permissible Variations in Lengths Indicated, in.
Rounds:	throw in one revolution:
15/16 and under	0.020 in 42-in. length
Over 15/16 to 4, incl	0.015 in 42-in. length
Squares, hexagons, rectangles:	depth of chord:
All sizes	0.025 per foot of length

TABLE VII.—PERMISSIBLE VARIATIONS IN STRAIGHTNESS OF PRECISION-STRAIGHTENED COLD-DRAWN NICKEL SHAFTING.

Specified Diameter of Shafting, in.	Standard Distance Between Supports	Permissible Variations (Throw in One Revolution) from Straightness, in.
½ to 15/16, incl	42 in.	0.005
Over 15/16 to 1 15/16, incl	42 in.	0.006
Over 1 15/16 to 2½, incl	42 in.	0.007
Over 2½ to 4, incl	42 in.	0.008
¾ to 15/16, incl	specified lengths of 3 to 10 ft	0.004 plus 0.0025 for each foot or fraction thereof in excess of 3 ft.
Over 15/16 to 4, incl	specified lengths of 20 ft. and less	0.005 plus 0.0015 for each foot or fraction thereof in excess of 3 ft.

TABLE VIII.—PERMISSIBLE VARIATIONS IN STRAIGHTNESS OF HOT-FINISHED RODS AND BARS.[a]

Condition and Finish	Permissible Variations, in.
Rods and bars, hot-finished	0.050[b]
Round rods, hot-finished, ground or rough turned	0.050[c]
Round rods, hot-finished, semi-smooth machined	0.0031[d,e]
Round rods, hot-finished, smooth machined	0.0015[d]

[a] Not applicable to forging quality rods.

[b] The maximum curvature (depth of chord) shall not exceed the values indicated multiplied by the length in feet.

[c] The throw in one revolution in any 3 ft of length or fraction thereof.

[d] The throw in one revolution in any 20 ft of length, or fraction thereof.

[e] For shafts over 20 to 30 ft, the maximum deviation from straightness (throw in one revolution) will not exceed 0.062 in. over the entire length when supported at the ends.

(*c*) *Test Reports.*—Test Reports shall consist of a statement to the effect that material complies with the requirements of the specification and the manufacturer shall also include in the Test Report the results of chemical (ladle) analyses of each heat and the results of mechanical property tests for each lot of materials furnished.

NOTE 5.—Where material is intended for ASME Boiler and Pressure Vessel Code or other code requirements, it shall be the responsibility of the purchaser to determine whether a Certificate of Compliance (Section 19(*b*)) will be acceptable to the responsible inspector or code authority or whether, in such instances, a Test Report (Section 19(*c*)) will be required.

(*d*) *Samples for Check Analysis.*—When, in addition to the above options on certification, the purchaser desires to make check analyses, sufficient additional material shall be ordered to provide samples for such check analyses. Analyses shall be made in the purchaser's laboratory or elsewhere at the expense of the purchaser.

(*e*) *Purchaser's Inspection at Place of Manufacture.*—When specified on the purchase order, inspection by the purchaser's representative may be made at the place of manufacture prior to shipment. In such cases, the purchaser or his representative shall state which tests he desires to witness. The manufacturer shall give the purchaser ample notice in writing as to when tests shall be conducted so that the purchaser's representative may witness any tests (excluding check analyses) that he may desire. Unless otherwise agreed, if the purchaser's representative does not present himself at the manufacturer's plant within 14 days after the notified date set for testing, the manufacturer shall consider mill inspection as having been waived, shall proceed with his own testing, and shall furnish the purchaser with a Certificate of Compliance or a Test Report (Paragraphs (*b*) and (*c*)), whichever has been agreed upon between the inspector and the manufacturer.

The manufacturer shall afford the inspector representing the purchaser all reasonable facilities to satisfy him that the material is being furnished in accordance with this specification. Where such plant inspection may involve unusual handling, such as unpacking and repacking, retesting and reinspection and other unusual operations resulting in undue loss of time and production, the manufacturer shall so notify the purchaser.

Rejection

20. Material not conforming to this specification or to authorized modifications thereof shall be subject to rejection.

Rehearing

21. Samples tested in accordance with this specification that represent rejected material shall be preserved for not less than three weeks from the date of the test report. In case of dissatisfaction with the results of the tests, the manufacturer may make claim for a rehearing within that time.

APPENDIX I

The various conditions (tempers) and finishes in which nickel and low-carbon nickel rods and bars are procurable are as indicated below.

Low-carbon nickel is intended essentially for fused caustic and other fused salts and for temperatures above 600 F. For such applications the manufacturer should be consulted.

(*1*) *Hot-Finished.*—With a tightly adherent, black, mill oxide surface.

(*2*) *Hot-Finished, Rough-Turned.*—Similar to (*1*) except rough turned with a broad nosed tool similar to a bar peeling operation and thus may not be straight. Intended generally for machining where an overhauled surface is desired, essentially for machined step down shafts or parts machined in short lengths of 3 ft or less.

(*3*) *Hot-Finished, Semi-Smooth Machined.*—Broad nosed or lathe turned and straightened as per diameter and straightness tolerances specified herein. Intended generally where parts are to be subsequently smooth finish machined.

(*4*) *Hot-Finished, Smooth-Finish Machined.*—Lathe machined to tolerances and straightness as specified herein with a smooth finish roughly comparable with rms finish No. 20 to 30. Intended generally for machined parts where minimum subsequent finish machining is desired.

(*5*) *Hot-Finished, Forging Quality.*—Rough turned and spot ground, as necessary, for sizes 1 in. in diameter and over; rough ground and spot ground for sizes under 1 in. in diameter. Material is selected from heats of known, good hot malleability.

NOTE.—For sizes 4 in. in diameter and less, cold-drawn rod may be used also for forging by virtue of the fact such rod have been overhauled for removal of mechanical surface defects prior to cold drawing. In such cases, the user should run pilot forging tests to insure himself that such material has the desired hot malleability range.

(*6*) *Hot-Finished, Annealed.*—Soft with a tightly adherent oxide that may vary from dark to light.

(*7*) *Hot-Finished, Annealed and Pickled.*—Same as (*6*) above except descaled for removal of mill oxide. Provides for better surface inspection than does hot finished material and often employed where welding is involved where removal of mill oxide is desired.

NOTE.—Annealing prior to pickling is required in order to reduce the mill oxide since uniform pickling of an unreduced oxide is difficult.

(*8*) *Cold-Drawn, As-Drawn.*—Hot-finished, overhauled, cold-drawn and straightened with a smooth bright finish.

(*9*) *Cold-Drawn, Annealed.*—Hot-finished overhauled, cold-drawn and straightened. Annealed for softness and with a dull matte finish.

APPENDIX II

Material is available commercially in the following sizes. These are for information only as they are subject to change. The manufacturers should be consulted for the latest information available

Condition and Form	Diameter or Distance Across Flats, in.
ROD (ROUNDS)	
Hot-finished:	
As hot-finished	¼ to 4½, incl
Semi-smooth machined	Over 4 to 10, incl
Smooth-finished machined	Over 4 to 10, incl
Rough-turned or ground[a]	½ to 12, incl
Cold-drawn	3/16 to 4, incl
BAR	
Hot-finished:	
Rectangles	⅛ to 6, incl by ½ to 10, incl
Squares	⅜ to 6, incl
Hexagons	⅜ to 8, incl
Cold-drawn:	
Rectangles:	
Thicknesses	1¾ and under
Widths	4 and under
Squares	2⅛ and under
Hexagons	2 and under

[a] For forging quality material, spot grinding is permitted; however, when machining quality is specified, spot grinding is not permitted.

SPECIFICATION FOR NICKEL SEAMLESS PIPE AND TUBE

SB-161

(IDENTICAL WITH ASTM SPECIFICATION B 161-61 EXCEPT THAT THE CONVERTER SIZES HAVE BEEN DELETED)

Scope

1. (*a*) This specification covers nickel and low-carbon nickel in cold-drawn (see Paragraph (*b*)) seamless pipe and tube in one grade and two carbon levels (see Section 5), and intended for general corrosive service and for mechanical applications, in sizes 8⅝ in. and under in outside diameter, and with wall thicknesses of 0.500 in. and under. Provision is made for the low-carbon nickel for corrosive and elevated temperature applications where such material may be preferred to commercially pure, wrought nickel (Appendix I). Pipe is available in various schedules (Appendix II). Tube may be specified to two dimensions only (length excepted) as follows:

(*1*) Outside diameter and *average* wall (preferred) (Note 1),

(*2*) Outside diameter and inside diameter (Note 2), or

(*3*) Inside diameter and *average* wall (Note 2).

NOTE 1.—Tube produced to outside diameter and *minimum* wall may be furnished upon agreement between the manufacturer and the purchaser.

NOTE 2.—Tube is available commercially in a wide range of outside diameters and wall thicknesses. When produced to outside diameter and inside diameter and to inside diameter and *average* wall, the range of sizes is more limited and the manufacturer should be consulted as to whether dies and tools are available or whether the sizes desired will necessitate production of special dies and tools.

(*b*) *Definitions.*—The following definitions will apply:

(*1*) *Tube.*—A hollow product of round or any other cross-section having a continuous periphery.

(*2*) *Pipe.*—Seamless tube conforming to the particular dimensions commercially known as "standard pipe sizes" (Appendix II).

(*3*) *Average Diameter.*—The average diameter of a tube is the average of the maximum and minimum outside diameters, or the maximum and minimum inside diameters, as determined at any one cross-section of the tube.

(*c*) Hot-finished (extruded) tube is available in some of the sizes provided for in this specification and also in larger diameters and heavier wall thicknesses than indicated in Paragraph (*a*). The surface condition, properties and permissible tolerances in this specification are not applicable to such material, and the manufacturer should be consulted.

(*d*) For tube intended for condenser, and heat-exchanger service, reference should be made to the Specification for Seamless Nickel and Nickel Alloy Condenser and Heat-Exchanger Tube (ASTM Designation: B 163).

(*e*) Material is available in the following conditions (tempers) and finishes (Appendix I):

(*1*) Annealed,

(*2*) Stress-relieved,

(*f*) It should be understood that this specification is general. Provision is made herein for material suitable for hot- and cold-working operations, machining, welding and other common methods of fabrication. Since the material may be used for purposes where the requirements of the operations are too particular to be prescribed in general specifications, it is advisable in these instances for the purchaser to submit samples or detailed information to the manufacturer and secure an adjustment of processing to suit the conditions for which the material is intended (see Section 15).

Basis of Purchase

2. Orders for material under this specification shall include information with respect to the following (see Appendix I) and shall state whether nickel or low-carbon nickel is desired:

(*a*) *Condition* (*Temper*) (Table I and Appendix I).

(*b*) *Finish* (Appendix I)

(*c*) *Dimensions:*

(*1*) *Tube.*—Outside diameter, *average* wall thickness (in inches, not gage number), and length. (See Notes 1 and 2 in Section 1 (*a*), for *minimum* wall tube and for tube ordered to outside diameter and inside diameter or to inside diameter and *average* wall.)

(*2*) *Pipe.*—Iron pipe size and schedule (Appendix II).

(*d*) *Fabrication Details.*—Not mandatory but helpful to the manufacturer:

(*1*) *Cold Bending or Coiling.*

(*2*) *Hot Forming* (Section 4 (*d*)).

(*3*) *Welding or Brazing.*—Process to be employed.

(*4*) *Pressure Requirements* (Section 10).—Test pressure (other than 1,000 psi).

(*5*) *Machining.*—Indicate finished size and length in which to be machined and whether to be chucked to outside diameter or inside diameter.

(*6*) *Ends.*—Unless otherwise specified, plain ends cut and deburred will

be furnished. If threaded ends or ends beveled for welding are desired, give details.

(*e*) *Special Requirements.*—State nature and detail (Section 15).

(*f*) *Certification and Inspection.*—State at the time the order is placed which of the following options, if any, is desired:

(*1*) Furnish *Certificate of Compliance* (includes chemical analyses and certification of compliance but does not include mechanical properties, (Section 18 (*b*)).

(*2*) Furnish *Test Reports*, (includes chemical analyses and mechanical properties (Section 18 (*c*)).

(*3*) *Samples for Check Analysis.*—Whether samples for check analysis shall be furnished (See Section 18 (*d*)).

(*4*) *Inspection at Place of Manufacture.*—Which tests are to be witnessed (Section 18 (*e*)).

Material

3. The material shall be of such quality that the finished product shall have the chemical composition, properties and characteristics described in this specification.

Manufacture

4. (*a*) Pipe and tube shall be produced by hot working, annealing, pickling, grinding, cold working, or by any combination of these processes.

(*b*) Pipe and tube shall be produced to the condition (temper), finish, and dimensions specified.

(*c*) When material is intended for cold coiling or bending it shall be so specified on the order so that material suitable for the intended application may be furnished (see Appendix I).

(*d*) When material is specified "hot-forming quality," the manufacturer will furnish material from heats of good, known hot malleability.

Chemical Composition

5. The material shall conform to the following requirements as to chemical composition:[a]

	Nickel	Low-Carbon Nickel
Nickel,[b] min, per cent	99.0	99.0
Copper, max, per cent	0.25	0.25
Iron, max, per cent	0.40	0.40
Manganese, max, per cent	0.35	0.35
Carbon, max, per cent	0.15	0.02
Silicon, max, per cent	0.35	0.35
Sulfur, max, per cent	0.01	0.01

[a] For the applicable rounding-off procedure, see Section 13(*b*).

[b] Cobalt counting as nickel.

Samples for Chemical Analysis

6. (*a*) Unless otherwise agreed upon by the manufacturer and the purchaser, heat (ladle) analyses furnished by the manufacturer shall be accepted as defining the composition of the material furnished.

(*b*) If samples for check analysis are desired, they shall be so specified by the purchaser at the time of placement of the order. Samples shall be taken from material representative of each 5000 lb, or fraction thereof, of the finished material, and shall conform to the requirements of Section 5.

(*c*) Such samples for chemical analysis shall be taken in accordance with the procedure described in the Method of Sampling Wrought Non-Ferrous Metals and Alloys for Determination of Chemical Composition (ASTM Designation: E 55). The lot size, portion size and selection of pieces shall be as follows:

Lot Size.—5,000 lb, or fraction thereof, of finished material.

Portion Size.—Pieces from four individual lengths of finished material. If the lot consists of less than four lengths, a piece shall be taken from each individual length.

Minimum Weight of Composite Sample.—150 g divided into three equal parts, one for the manufacturer, one for the purchaser, and one for an umpire, if necessary.

(*d*) Samples for check analyses, when requested after the date of placement of the order, shall be as agreed upon between the manufacturer and the purchaser.

Lots for Mechanical Testing

7. Unless otherwise specified, a lot for mechanical testing of pipe or tube shall consist of all material from one heat in the same condition (temper) and the same specified cross-section in a shipment and in no case more than 25,000 lb.

NOTE 3.—Where material cannot be identified by heat, a lot shall consist of not more than 500 lb of material in the same condition (temper) and size.

Sampling for Mechanical Tests

8. (*a*) Samples of the material to provide test specimens for mechanical tests shall be taken from such locations in each lot as to be representative of that lot.

(*b*) When samples are to be taken after delivery, the purchaser of material ordered to cut lengths may arrange with the manufacturer to have an excess length furnished or request on the order additional material of adequate size to provide sample coupons for inspection purposes.

Mechanical Properties

9. The material shall conform to the requirements as to mechanical properties prescribed in Tables I and IV, as applicable.

Hydrostatic Test

10. (*a*) Each pipe or tube with an outside diameter ⅛ in. and larger and tubes with wall thicknesses of 0.015 in. and over shall be tested by the manufacturer to an internal hydrostatic pressure of 1,000 psi provided that the fiber stress calculated in accordance with the following formula does not exceed the allowable fiber stress, *S*, indicated below:

$$P = \frac{2St}{D}$$

where:

P = hydrostatic test pressure, psi,

S = allowable fiber stress for material in the condition furnished, as follows:

	Nickel	Low-Carbon Nickel
Annealed:		
5 in. outside diameter and under	10 000 psi	8 000 psi
Over 5 in. outside diameter	8 000 psi	6 700 psi
Stress relieved:		
All sizes	16 200 psi	15 000 psi

t = minimum wall thickness in inches; equal to the specified *average* wall minus the permissible "minus" wall tolerance, Table II, or the specified *minimum* wall thickness and

D = outside diameter of the tube in inches.

(*b*) When so agreed upon between the manufacturer and the purchaser, pipe or

TABLE I.—MECHANICAL PROPERTIES[a] OF PIPE AND TUBE.

Condition and Size	Tensile Strength, min, psi		Yield Strength (0.2 per cent offset),[c] min, psi		Elongation in 2 in., min, per cent	
	Nickel	Low-Carbon Nickel	Nickel	Low-Carbon Nickel	Nickel	Low-Carbon Nickel
Annealed:						
5 in. and under outside diameter	55 000	50 000	15 000	12 000	40	40
Over 5 in. in outside diameter	55 000	50 000	12 000	10 000	40	40
Stress-relieved:						
All sizes	65 000	60 000	40 000	30 000	15	15
Hot-forming quality (as drawn):						
All sizes	[d]	[d]	[d]	[d]	[d]	[d]

[a] For the applicable rounding-off procedure, see Section 13(b).
[c] See Section 13 (c).
[d] "Hot forming quality" pipe and tubing is furnished to chemical requirements and surface inspection only. No tensile properties are required.

tube may be tested to 1½ times the above allowable fiber stress provided such a requirement does not require testing to a hydrostatic test pressure in excess of 5,500 psi.

Test Specimens

11. (*a*) Tension test specimens shall be taken from finished material and tested in the direction of fabrication.

(*b*) Whenever practicable, all pipe and tube shall be tested in full size. If machined specimens are required, such specimens shall be prepared in accordance with Figs. 12 and 13 of the Methods of Tension Testing of Metallic Materials (ASTM Designation: E 8).

Number of Tests

12. Unless otherwise specified, one tension test shall be made on each lot of pipe and tube as defined in Section 7.

Methods of Test and Chemical Analysis

13. (*a*) The chemical composition and mechanical properties of the material as enumerated in this specification shall be determined, in case of disagreement, in accordance with the following methods of the American Society for Testing Materials:

Test	ASTM Designation[a]
Chemical Analysis	E 39
Tension	E 8
Rounding-Off Procedure	E 29
Method of Sampling	E 55
Rockwell Hardness	E 18
Hardness Conversion	E 140

[a] These designations refer to the following methods of testing:
E 39, Methods for Chemical Analysis of Nickel,
E 8, Methods of Tension Testing of Metallic Materials,
E 29, Recommended Practices for Designating Significant Places in Specified Limiting Values,
E 55, Method of Sampling Wrought Non-Ferrous Metals and Alloys for Determination of Chemical Composition,
E 18, Methods of Test for Rockwell Hardness and Rockwell Superficial Hardness of Metallic Materials, and
E 140, Hardness Conversion Tables for Metals (Relationship Between Diamond Pyramid Hardness, Brinell Hardness, and Rockwell Hardness).

(*b*) For purposes of determining compliance with the specified limits for requirements of the properties listed in the following table, an observed value or a calculated value shall be rounded off as indicated below, in accordance with the rounding-off method of the Recommended Practices E 29:

Test	Rounded-off Unit for Observed or Calculated Value
Chemical composition, hardness, and tolerances (when expressed in decimals)	nearest unit in the last right-hand place of figures of the specified limit.
Tensile strength, yield strength	nearest 1000 psi.
Elongation	nearest 1 per cent.

(*c*) In lieu of the offset method, the minimum yield strength may be determined as the stress required to produce the elongation under load as calculated by the following formula:

$$X = \left(\frac{Y}{Z} + 0.002\right) \times \text{gage length in inches}$$

where:

X = limiting extension under load in inches,
Y = specified yield strength at 0.2 per cent offset, from Table I and
Z = modulus of elasticity (30,000,000 psi).

In case of dispute the offset method shall be used as the referee procedure.

Permissible Variations in Dimensions and Weight

14. (*a*) *Diameter and Wall Thickness.*—The permissible variations in the outside and inside diameter and wall thickness of pipe and tube shall not exceed those prescribed in Table II.

(*b*) Permissible variations given in Tables II are applicable only to two dimensions. Thus, if outside diameter and wall are specified, the inside diameter may not conform to the permissible variations shown. Similarly, if outside diameter and inside diameter are specified, the wall may not conform to the permissible variations shown.

(*c*) *Length.*—When pipe or tube is ordered cut-to-length, the length shall not be less than that specified, but a variation of plus ⅛ in. will be permitted, except that for lengths over 30 ft, a variation of plus ¼ in. will be permitted.

(*d*) *Straightness.*—Material shall be reasonably straight and free from bends or kinks.

(*e*) *Weight.*—No lot of *average* wall tubes shall exceed the calculated weight by more than 10 per cent for tubes 4½ in. and under in outside diameter and not more than 12½ per cent for tubes over 4½ in. in outside diameter. The material covered by this specification shall be assumed to weigh 0.321 lb per cu in.

Special Requirements

15. (*a*) Special tolerances other than those specified herein shall be as agreed upon by the manufacturer and the purchaser.

(*b*) Special variations in analysis, test procedures, mechanical properties, and quality requirements not covered by this specification shall be as agreed upon by the manufacturer and the purchaser.

(*c*) Where material is intended for nuclear applications and other critical end uses, the manufacturer shall be notified at the time of placement of the inquiry or order to determine if material of quality and inspection procedures normally employed for commercial material to this specification are adequate. In the event that more critical quality or more rigid inspection standards are indicated, the manufacturer and the purchaser shall agree upon such standards prior to production.

Workmanship and Finish

16. The material shall be uniform in quality and temper, smooth, commercially straight, and free from injurious defects.

Marking

17. Unless otherwise specified, each bundle or shipping container shall be marked with the name of the material, this specification number, the size, gross, tare and net weight, consignor and consignee address, contract or order number, or such other information as may be defined in the contract or order.

Certification and Inspection

18. (*a*) Unless otherwise agreed upon between the manufacturer and the purchaser, certification shall be based on one of the options described in Paragraphs (*b*) and (*c*). The option desired shall be specified on the individual purchase order (Section 2 (*f*)). In the event that neither of the options is specified, the basis for acceptance or rejection shall be based on the provisions described in Paragraph (*b*).

(*b*) *Certificate of Compliance.*—The Certificate of Compliance shall consist of the results of the chemical (ladle) analyses of each heat in the shipment and a statement to the effect that material complies with requirements of the specification, based on available production data. No mechanical properties will be furnished on such certificates.

NOTE 4.—In the event results of both chemical analyses and mechanical property tests are desired, see Section 18(*c*).

(*c*) *Test Reports.*—Test Reports shall consist of a statement to the effect that material complies with the requirements of the specification and the manufacturer shall also include in the Test Report the results of chemical (ladle) analyses of each heat and the results of mechanical property tests for each lot of materials furnished.

NOTE 5.—Where material is intended for ASME Boiler and Pressure Vessel Code or other code requirements, it shall be the responsibility of the purchaser to determine whether a Certificate of Compliance (Section 18(*b*)) will be acceptable to the responsible inspector or code authority or whether, in such instances a Test Report (Section 18(*c*)) will be required.

(*d*) *Samples for Check Analysis.*—When, in addition to the above options on certification, the purchaser desires to make check analyses, sufficient additional material shall be ordered to provide samples for such check analyses. Analyses shall be made in the purchaser's laboratory or elsewhere at the expense of the purchaser.

(*e*) *Purchaser's Inspection at Place of Manufacture.*—When so specified, inspection by the purchaser's representative may be made at the place of manufacture prior to shipment. In such cases, the purchaser or his representative shall state which tests he desires to witness. The manufacturer shall give the purchaser ample notice in writing as to when tests shall be conducted so that the purchaser's representative may witness any tests (excluding check analyses) that he may desire. Unless otherwise agreed upon, if the purchaser's representative does not present himself at the manufacturer's plant within 14 days after the notified date set for testing, the manufacturer shall consider mill inspection as having been waived, shall proceed with his own testing, and shall furnish the purchaser with a Certificate of Compliance or a Test Report (Section 18 (*b*) and (*c*)), whichever has been agreed upon between the inspector and the manufacturer.

The manufacturer shall afford the inspector representing the purchaser all reasonable facilities to satisfy him that

TABLE II.—PERMISSIBLE VARIATIONS[a, b, c, d, e] IN OUTSIDE AND INSIDE DIAMETER AND WALL THICKNESS (AVERAGE WALL).

Specified Outside Diameter or Calculated Nominal Outside Diameter, in. (When Ordered to Inside Diameter and Average Wall)	Permissible Variations			
	Outside Diameter[a] or Inside Diameter,[b, c] in.		Wall Thickness,[e] per cent	
	Plus	Minus	Plus	Minus
Over 0.400 to ⅝, excl.	0.005	0[d]	12.5	12.5
⅝ to 1½, incl.	0.005	0.005	10	10
Over 1½ to 4½, incl.	0.010	0.010	10	10
Over 4½ to 6, incl.	0.015	0.015	12.5	12.5
Over 6 to 7½, incl.	0.020	0.020	12.5	12.5
Over 7½ to 8⅝, incl.	0.025	0.025	12.5	12.5

[a] The permissible variations in the above table apply to individual measurements, including out-of-roundness (ovality), except for the following conditions:
Thin-Wall Pipe and Tube.—For thin-wall pipe and tube having a nominal wall thickness of 3 per cent or less of the nominal outside diameter, in all conditions (temper), the mean outside diameter or mean inside diameter shall conform to the permissible variations of the above table and individual measurements (including ovality) shall conform to the plus and minus values of the table, with the values increased by 0.5 per cent of the nominal outside diameter.
Annealed Pipe and Tube Over 4½ in. in Nominal Outside Diameter.—For annealed pipe and tubing over 4½ in. in nominal outside diameter with a nominal wall thickness greater than 3 per cent of the nominal outside diameter, the mean outside diameter or mean inside diameter shall conform to the permissible variations of the above table and individual measurements shall not exceed twice the permissible variations of the above table.
[b] For pipe and tube, in all tempers, with an inside diameter of less than ½ in. which cannot be successfully drawn over a mandrel, the inside diameter shall be governed by the outside diameter and the wall thickness variations.
[c] For pipe and tube in all tempers with an inside diameter less than 50 per cent of the outside diameter, which cannot be successfully drawn over a mandrel, the inside diameter may vary over or under by an amount equal to 10 per cent of the nominal wall thickness and the wall thickness may vary plus or minus 12.5 per cent.
[d] When inside diameter is specified, tubes with an inside diameter of ½ in. or over and with an outside diameter of under ⅝ in. shall have a permissible variation in inside diameter of plus and minus 0.005 in.
[e] *Eccentricity.*—The variation in wall thickness in any one cross-section of any one pipe or tube shall not exceed plus or minus 10 per cent of the actual (measured) average wall of that section (defined as the average of the thickest and the thinnest wall in that section).

the material is being furnished in accordance with this specification. Where such plant inspection may involve unusual handling such as unpacking and repacking, retesting and reinspection and other unusual operations resulting in undue loss of time and production, the manufacturer shall so notify the purchaser.

Rejection

19. Material not conforming to this specification or to authorized modifications will be subject to rejection.

Rehearing

20. Samples tested in accordance with this specification that represent rejected material shall be preserved for not less than three weeks from the date of the test report. In case of dissatisfaction with the results of the tests, the manufacturer may make claim for a rehearing within that time.

APPENDIX I

The various conditions and finishes in which nickel and low-carbon nickel cold-drawn, seamless pipe and tube are procurable are as indicated below. Low-carbon nickel is intended essentially for fused caustic and other fused salts and for temperatures above 600 F. For such applications the manufacturer should be consulted.

(*1*) *Annealed.*—Soft, with a dull matte finish suitable for cold coiling or bending.

(*2*) *Stress-Relieved.*—Thermally treated below the annealing temperature to relieve the major portion of the internal stresses resulting from cold drawing, with a thin, light to medium dark surface except that for light wall tube (other than pipe sizes) in sizes ⅛ to 1¼ in. in outside diameter and in all wall thicknesses under ⅛ in. in outside diameter, material may have a bright finish.

NOTE.—Stress-relieved tube to this Specification B 161 is not recommended for rolling or expanding into tube sheets, as it is harder and has less ductility than "stress-relieved" condenser tube provided for in the Specification for Seamless Nickel and Nickel Alloy Condenser, and Heat-Exchanger Tubes (ASTM Designation: B 163). When intended for cold coiling or bending, stress-relieved tube is limited to bending to fairly liberal radii.

(*3*) *Stress Equalized.*—This product was formerly provided for in Specification B 161–49 T *but is no longer furnished commercially.* Available on special inquiry only.

(*4*) *Hot-Forming Quality.*—Cold-drawn, with a smooth, bright, as-drawn surface. Material is selected from heats of known good hot malleability. At the manufacturer's option, material may be smooth spot-ground for removal of minor surface imperfections.

APPENDIX II

The following schedules of cold-drawn, seamless, nickel-copper alloy pipe are regularly available. Other schedules may be furnished, and the manufacturer should be consulted. This table is published for information only.

TABLE III.—PIPE SCHEDULES.[a]

Nominal Pipe Size, in.	Outside Diameter, in.	Nominal Wall Thickness, in.			
		Schedule Number 5	Schedule Number 10	Schedule Number 40	Schedule Number 80
⅛	0.405	...	0.049	0.068	0.095
¼	0.540	...	0.065	0.088	0.119
⅜	0.675	...	0.065	0.091	0.126
½	0.840	0.065	0.083	0.109	0.147
¾	1.050	0.065	0.083	0.113	0.154
1	1.315	0.065	0.109	0.133	0.179
1¼	1.660	0.065	0.109	0.140	0.191
1½	1.900	0.065	0.109	0.145	0.200
2	2.375	0.065	0.109	0.154	0.218
2½	2.875	0.083	0.120	0.203	0.276
3	3.500	0.083	0.120	0.216	0.300
3½	4.000	0.083	0.120	0.226	0.318
4	4.500	0.083	0.120	0.237	0.337
5	5.563	0.109	0.134	0.258	0.375
6	6.625	0.109	0.134	0.280	0.432
8	8.625	...	...	0.322	0.500

[a] The pipe schedules shown above conform with standards adopted by the American Standards Association.

SPECIFICATION FOR NICKEL PLATE, SHEET, AND STRIP

SB-162

(IDENTICAL WITH ASTM SPECIFICATION B 162-61 EXCEPT THAT THE HARDENED GRADES OF COLD-ROLLED SHEET AND STRIP HAVE BEEN DELETED)

Scope

1. (*a*) This specification covers rolled nickel in one grade and two carbon levels as shown in Section 5. Provision is made for the low-carbon nickel for corrosive and elevated temperature applications where such material may be preferred to commercially wrought pure nickel (see Appendix I).

(*b*) *Definitions.*—The following definitions shall apply unless otherwise agreed upon between the manufacturer and the purchaser:

Definition	Thickness, in.	Width, in.
Hot-rolled plate (Note 1)	3/16 and over (Table III and IV)	(Note 3) (Table VI)
Hot-rolled sheet (Note 1)	0.018 to 0.250, incl (Table V)	(Table VIII)
Cold-rolled sheet (Note 2)	0.018 to 0.250, incl (Table V)	(Table VIII)
Cold-rolled strip (Note 2)	0.005 to 0.125, incl (Table V)	(Table VIII)

NOTE 1.—Unless otherwise specified, material 1/16 to ¼ in., incl, in thickness may be furnished as sheet or plate at the manufacturer's option, providing the material meets the specification requirements for the condition ordered.

NOTE 2.—Unless otherwise specified, material 14 in. and under in width may be furnished as sheet or strip at the manufacturer's option, providing the material meets the specification requirements for the condition ordered.

NOTE 3.—At the manufacturer's option, hot-rolled plate, in widths 10 in. and under, may be furnished as hot-finished rectangles with sheared or cut edges in accordance with the Specification for Nickel Rod and Bar (ASTM Designation: B 160), providing the mechanical property requirements of Specification B 162 are met.

(*c*) It should be understood that this specification is general. Provision is made herein for material suitable for the general run of drawing, forming, stamping, bending, joining operations, and all other common methods of fabrication. Since the material may be used for purposes where the requirements of the operations are too particular to be prescribed in a general specification, it is advisable in these instances for the purchaser to submit samples or detailed information to the manufacturer and secure an adjustment of processing to suit the conditions for which the material is intended (see Section 22).

Basis of Purchase

2. Orders for material under this specification shall include information with respect to the following and shall state whether nickel or low-carbon nickel is desired. Nickel will be furnished unless low-carbon nickel is specified.

(*a*) *Condition (Temper).*—Tables I and II and Appendix I.

(*b*) *Finish.*—Appendix I.

(*c*) *Dimensions.*—Thickness (in decimals of an inch, not gage number) (Appendix II), width and length (inch or fraction).

(*d*) *Optional Requirements:*

(*1*) *Strip.*—Whether to be furnished in coil, in cut straight lengths, or in random straight lengths.

(*2*) *Strip.*—Whether to be furnished with commercial slit edge, or square edge or round edge.

NOTE 4.—For strip under 0.025 in. in thickness, state whether grain size other than those shown in Table II is desired.

(*3*) *Plate.*—Whether to be furnished specially flattened (Section 21(*b*)); also how plate is to be cut (Tables VI and IX).

(*e*) *Fabrication Details.*—Not mandatory but are helpful to the manufacturer:

(*1*) *Welding or Brazing.*—Process to be employed.

(*2*) *Plate.*—Whether material is to be hot-formed.

(*f*) *Special Requirements.*—State nature and details of requirements (Section 22).

(*g*) *Certification and Inspection.*—State at the time the order is placed which of the following options, if any, is desired:

(*1*) Furnish *Certificate of Compliance* (includes chemical analyses and certification of compliance but does not include mechanical properties (Section 25 (*b*)).

(*2*) Furnish *Test Reports* (includes chemical analyses and mechanical properties (Section 25 (*c*)).

(*3*) *Samples for Check Analysis.*—Whether samples for check analysis should be furnished (Section 25 (*d*)).

(*4*) *Inspection at Place of Manufacture.*—Which tests are to be witnessed (Section 25 (*e*)).

Material

3. The material shall be of such quality that the finished product shall have the chemical composition, properties and characteristics described in this specification.

Manufacture

4. (*a*) Plate, sheet, and strip shall be produced by hot-working, annealing, pickling, cold-working, reannealing, and polishing, or by any combination of these processes.

(*b*) Plate, sheet, and strip shall be produced to the condition (temper), finish, and dimensions specified.

Chemical Composition

5. The material shall conform to the following requirements as to chemical composition:[a]

	Nickel	Low-Carbon Nickel
Nickel,[b] min., per cent	99.0	99.0
Copper, max., per cent	0.25	0.25
Iron, max., per cent	0.40	0.40
Manganese, max., per cent	0.35	0.35
Carbon, max., per cent	0.15	0.02
Silicon, max., per cent	0.35	0.35
Sulfur, max., per cent	0.01	0.01

[a] For the applicable rounding-off procedures, see Section 14 (*b*).
[b] Cobalt counting as nickel.

Samples for Chemical Analysis

6. (*a*) Unless otherwise agreed upon by the manufacturer and the purchaser, heat (ladle) analyses furnished by the manufacturer shall be accepted as defining the composition of the material furnished.

(*b*) If samples for check analysis are desired, they shall be so specified by the purchaser, at the time of placement of the order. Samples shall be taken from material representative of each 5000 lb., or fraction thereof, of the finished material, and shall conform to the requirements of Section 5.

(*c*) Such samples for chemical analysis shall be taken in accordance with the procedure described in the Method of Sampling Wrought Non-Ferrous Metals and Alloys for Determination of Chemical Composition (ASTM Designation: E 55). The lot size, portion size and selection of pieces shall be as follows:

Lot Size.—5,000 lb, or fraction thereof, of finished material.

Portion Size.—Pieces from four individual lengths of finished material. If the lot consists of less than four lengths, a piece shall be taken from each individual length.

Minimum Weight of Composite Sample.—150 g divided into three equal parts, one for the manufacturer, one for the purchaser, and one for an umpire, if necessary.

(*d*) Samples for check analyses, when requested after the date of placement of the order, shall be as agreed upon between the manufacturer and the purchaser.

Lots for Mechanical Testing

7. Unless otherwise specified, a lot for mechanical testing shall be defined as follows:

Plate.—A lot of plate shall consist of the products resulting from the rolling of one heat of material in the same condition (temper) and specified thickness.

Sheet and Strip.—A lot of sheet or strip shall consist of material from one heat in the same form (sheet or strip), condition (temper), finish, and specified thickness but in no case more than 25,000 lb.

NOTE 5.—Where material cannot be identified by heat, a lot shall consist of not more than 500 lb of material in the same thickness and condition, except that for plates weighing over 500 lb only one specimen shall be taken.

Sampling for Mechanical Tests

8. (*a*) Samples of the material to provide test specimens for mechanical tests shall be taken from such locations in each lot as to be representative of that lot.

(*b*) When samples are to be taken after delivery, the purchaser of material ordered to cut lengths may arrange with the manufacturer to have an excess length furnished or request on the order additional material of adequate size to provide sample coupons for inspection purposes.

Mechanical Properties

9. The material shall conform to the requirements as to mechanical properties prescribed in Table I.

Hardness

10. Material tested in a single thickness shall conform to the Rockwell or equivalent hardness requirements prescribed in Tables I and II, as applicable, with the exception that hardness values in Table I are informative only for those conditions of plate, sheet and strip for which tensile requirements have been specified.

NOTE 6.—For hardness conversions, see the Standard Hardness Conversion Tables for Metals (Relationship Between Diamond Pyramid Hardness, Brinell Hardness, and Rockwell Hardness) (ASTM Designation: E 140).

NOTE 7.—Caution should be observed in using the Rockwell test on thin material, as the results may be affected by the specimen thickness. For thickness under 0.050 in, the use of the Rockwell superficial or the Vickers hardness test is suggested. For thicknesses of 0.005 to 0.015 in., incl, the Vickers hardness test should be used.

Grain Size and Hardness of Deep Drawing Quality and Spinning Quality Sheet and Strip (See Appendix I)

11. "Deep drawing quality" and "spinning quality" sheet and strip shall conform to the grain sizes as illustrated in Plate I of the Methods for Determining the Average Grain Size of Metals (ASTM Designation: E 112). The requirements shall be as indicated in Table II.

Test Specimens

12. (*a*) Tension test specimens from material $\frac{3}{4}$ in. and under in thickness shall be of the full thickness of the material, and shall be machined to the form and dimensions shown in Fig. 7 of the Methods of Tension Testing of Metallic Materials (ASTM Designation: E 8).

(*b*) Tension test specimens from material over $\frac{3}{4}$ in. in thickness may be of the full thickness of the material, machined to the form and dimensions shown in Fig. 6 of Methods E 8, except that the elongation shall be measured for the 2-in. gage length that includes the fracture. In case of dispute the referee method shall be to prepare specimens by machining to the form and dimensions shown in Fig. 8 of Methods E 8.

(*c*) Tension test specimens from plate, sheet, and strip shall be taken transverse to the direction of rolling when width will permit.

Number of Tests

13. (*a*) *Tension Tests.*—Unless otherwise specified, one tension test shall be made on each lot of material as defined in Section 7.

(*b*) *Hardness Tests.*—Unless otherwise specified, hardness tests need not be made where hardness requirements are designated to be "for information only." Unless otherwise specified, where hardness values are shown as "mandatory" requirements, at least two, and not more than six, hardness readings shall be made on individual specimens in any lot, as defined in Section 7.

(*c*) *Grain Size.*—Unless otherwise specified, grain size tests shall be made only on "deep-drawing" and "spinning quality" sheet and strip. In such cases, one grain size test shall be made on each lot of material as defined in Section 7.

TABLE I.—MECHANICAL PROPERTIES[a] FOR PLATE, SHEET, AND STRIP.
All thicknesses and sizes unless otherwise indicated.

Material and Condition	Tensile Strength, min, psi	Yield Strength[b] (0.2 per cent offset), min, psi	Elongation in 2 in., min, per cent	Rockwell Hardness (B Scale)[c]
HOT-ROLLED PLATE				
Nickel, annealed	55 000	15 000	40	90 to 140[e]
Low-carbon nickel, annealed	50 000	12 000	40	75 to 135[e]
Nickel, as rolled[d]	55 000	20 000	35	100 to 150[e]
Low-carbon nickel, as rolled[d]	50 000	12 000	35	75 to 140[e]
HOT-ROLLED SHEET				
Nickel, annealed	55 000	15 000	40	70 max
Low-carbon nickel, annealed	50 000	12 000	40	62 max
COLD-ROLLED SHEET				
Nickel, annealed[f]	55 000	15 000	40	70 max
Low-carbon nickel, annealed[f]	50 000	12 000	40	62 max
COLD-ROLLED STRIP[h]				
Nickel, annealed[f]	55 000[g]	15 000	40[g]	64 max
Low-carbon nickel, annealed[f]	50 000[g]	12 000	40[g]	55 max

[a] For applicable rounding-off procedures, see Section 14(*b*).
[b] Yield strength requirements do not apply to material under 0.020 in. in thickness. See Section 14(*c*).
[c] Hardness values (Rockwell, Brinell or equivalent) are informative only and are not to be construed as the basis for acceptance or rejection for those conditions for which tensile requirements are specified. For other conditions hardness requirements are mandatory.
[d] As-rolled plate specified "suitable for hot forming" shall be furnished from heats of known good hot-malleability characteristics (Appendix I, Section (*A2*)). There are no applicable tensile or hardness requirements for such material.
[e] Numbers shown are Brinell hardness values and are informative only. They are not to be construed as the basis for acceptance or rejection.
[f] For deep drawing and spinning quality, see Sections 10, 11 and Table II.
[g] Not applicable for thickness under 0.010 in.
[h] Accurate hardness determinations are difficult to make on strip under 0.005 in. in thickness and are not recommended (See Note 7).

Methods of Test and Chemical Analysis

14. (*a*) The chemical compositions and mechanical properties of the material as enumerated in this specification shall be determined, in case of disagreement, in accordance with the following methods of the American Society for Testing Materials:

Test	ASTM Designation[a]
Chemical Analysis	E 39
Tension	E 8
Brinell Hardness	E 10
Rockwell Hardness	E 18
Hardness Conversion	E 140
Grain Size	E 112
Rounding-off Procedure	E 29
Method of Sampling	E 55
Spring-back	F 155

[a] These designations refer to the following methods of testing:
E 39, Methods for Chemical Analysis of Nickel,
E 8, Methods of Tension Testing of Metallic Materials,
E 10, Method of Test for Brinell Hardness of Metallic Materials,
E 18, Methods of Test for Rockwell Hardness and Rockwell Superficial Hardness of Metallic Materials,
E 140, Hardness Conversion Tables for Metals (Relationship Between Diamond Pyramid Hardness, Brinell Hardness, and Rockwell Hardness),
E 112, Methods for Estimating the Average Grain Size of Metals,
E 29, Recommended Practices for Designating Significant Places in Specified Limiting Values,
E 55, Method of Sampling Wrought Non-Ferrous Metals and Alloys for Determination of Chemical Composition, and
F 155, Method of Test for Temper of Strip and Sheet Metals for Electronic Devices.

(*b*) For purposes of determining compliance with the specified limits for requirements of the properties listed in the following table, an observed value or a calculated value shall be rounded off as indicated below, in accordance with the rounding-off method of the Recommended Practices for Designating Significant Places in Specified Limiting Values (ASTM Designation: E 29).

Test	Rounded-off Unit for Observed or Calculated Value
Chemical composition, hardness, and tolerances (when expressed in decimals)	nearest unit in the last right-hand place of figures of the specified limit.
Tensile strength, yield strength	nearest 1000 psi.
Elongation	nearest 1 per cent
Grain size:	
0.060 mm (0.0024 in.) or larger	nearest multiple of 0.005 mm (0.0002 in.)
less than 0.060 mm (0.0024 in.)	nearest multiple of 0.002 mm (0.0001 in.)

(*c*) In lieu of the offset method, the minimum yield strength may be determined as the stress required to produce the elongation under load as calculated by the following formula:

$$X = \left(\frac{Y}{Z} + 0.002\right) \times \text{gage length in inches}$$

where:

X = limiting extension under load in inches,
Y = specified yield strength at 0.2 per cent offset, from Table I, and
Z = modulus of elasticity (30,000,000 psi).

In case of dispute the offset method shall be used as the referee procedure.

(*d*) The measurement of grain size may be carried out by the planimetric method, the comparison method or the intercept method described in Methods E 112. However, in case of disagreement the "referee" method for determining grain size shall be the planimetric method.

Permissible Variations in Thickness and Weight

15. (*a*) The material covered by this specification shall be assumed to weigh 0.321 lb per cu in.

(*b*) *Plate.*—For plates up to 2 in., incl, in thickness the permissible variation under the specified thickness and permissible excess in overweight shall not exceed the amounts prescribed in Table III. For plates over 2 in. in thickness the permissible variations over the specified thickness shall not exceed the amounts prescribed in Table IV.

(*c*) *Sheet and Strip.*—The permissible variations in thickness of sheet and strip shall be as prescribed in Table V. The

TABLE II.—GRAIN SIZE[a] AND HARDNESS[a] FOR COLD-ROLLED, DEEP-DRAWING AND SPINNING QUALITY SHEET AND STRIP.

Thickness, in.	Calculated Diameter of Average Grain Section, max		Corresponding ASTM Micro-Grain Size No.	Rockwell B[b] Hardness, max
	mm	in.		
Nickel Sheet[f] (56 in. Wide and Under)				
0.050 and less	0.110	0.0043	3.5	64
Over 0.050 to 0.250, incl.	0.120	0.0047	3.0	64
Nickel Strip[e] (All Widths)				
0.005[c] to 0.010, incl.	0.025	0.0010	7.5[d]	70[d]
Over 0.010 to 0.024, incl.	0.065	0.0026	5.0	68
Over 0.024 to 0.125, incl.	0.110	0.0043	3.5	64
Low-Carbon Nickel Strip[e] (All Widths)				
0.005[c] to 0.010, incl.	0.030	0.0012	7.0[d]	66[d]
Over 0.010 to 0.024, incl.	0.075	0.0030	4.5	64
Over 0.024 to 0.125, incl.	0.110	0.0043	3.5	55

[a] See Section 14(*b*) for the applicable rounding-off procedure.
[b] For Rockwell or equivalent hardness conversions see ASTM Hardness Conversion Tables E 140.
[c] For ductility evaluations for strip under 0.005 in. in thickness the springback test such as that described in the Method of Test for Temper of Strip and Sheet Metals for Electronic Devices (ASTM designation: F 155) is often used and the manufacturer should be consulted.
[d] Accurate grain size and hardness determinations are difficult to make on strip under 0.005 in. in thickness and are not recommended (See Note 7).
[e] Grain size and hardness requirements other than those indicated above shall be as agreed upon between purchaser and manufacturer.
[f] There are no applicable grain size requirements for low-carbon nickel sheet. The hardness of low-carbon nickel sheet shall be not over Rockwell B 55, or equivalent.

thickness of strip and sheet shall be measured with the micrometer spindle $\frac{3}{8}$ in. or more from any edge for material 1 in. or over in width and at any place on strip under 1 in. in width.

Permissible Variations in Width or Diameter

16. (*a*) *Plate.*—The permissible variations in width of rectangular plates and diameter of circular plates shall be as prescribed in Tables VI and VII.

(*b*) *Sheet and Strip.*—The permissible variations in width for sheet and strip shall be as prescribed in Table VIII.

Permissible Variations in Length

17. (*a*) Sheet and strip of all sizes may be ordered to cut lengths, in which case a variation of $\frac{1}{8}$ in. over the specified length shall be permitted.

(*b*) Permissible variations in the length of rectangular plate shall be as prescribed in Table IX.

Straightness

18. (*a*) The edgewise curvature (depth of chord) of flat sheet, strip and plate shall not exceed 0.05 in. multiplied by the length in feet.

(*b*) Straightness for coiled strip material is subject to agreement between the manufacturer and the purchaser.

Edges

19. (*a*) When finished edges of strip are specified in the contract or order, the following descriptions shall apply:

Square-Edge Strip shall be supplied with finished edges, with sharp, square corners, without bevel or rounding.

Round-Edge Strip shall be supplied with finished edges, semi-circular in form, the diameter of the circle forming the edge being equal to the strip thickness.

(*b*) When no description of any required form of strip edge is given, it shall be understood that edges such as would result from slitting or shearing will be acceptable.

TABLE III.—PERMISSIBLE VARIATIONS IN THICKNESS AND OVERWEIGHT OF RECTANGULAR PLATES.

Note.—All plates shall be ordered to thickness and not to weight per square foot. No plates shall vary more than 0.01 in. under the thickness ordered, and the overweight of each lot[c] in each shipment shall not exceed the amount given in the table below. Spot grinding is permitted to remove surface imperfections, such spots not to exceed 0.01 in. under the specified thickness.

Specified Thickness, in.	Permissible Excess in Average Weight[b,c] per Square Foot of Plates for Widths Given in Inches, Expressed in Percentage of Nominal Weights									
	Under 48	48 to 60, excl	60 to 72, excl	72 to 84, excl	84 to 96, excl	96 to 108, excl	108 to 120, excl	120 to 132, excl	132 to 144, excl	144 to 160, incl
$\frac{3}{16}$ to $\frac{5}{16}$, excl.	9.0	10.5	12.0	13.5	15.0	16.5	18.0	...	...	...
$\frac{5}{16}$ to $\frac{3}{8}$, excl.	7.5	9.0	10.5	12.0	13.5	15.0	16.5	18.0	...	...
$\frac{3}{8}$ to $\frac{7}{16}$, excl.	7.0	7.5	9.0	10.5	12.0	13.5	15.0	16.5	18.0	19.5
$\frac{7}{16}$ to $\frac{1}{2}$, excl.	6.0	7.0	7.5	9.0	10.5	12.0	13.5	15.0	16.5	18.0
$\frac{1}{2}$ to $\frac{5}{8}$, excl.	5.0	6.0	7.0	7.5	9.0	10.5	12.0	13.5	15.0	16.5
$\frac{5}{8}$ to $\frac{3}{4}$, excl.	3.0	3.5	4.0	4.5	5.0	6.0	7.0	8.0	9.0	10.5
$\frac{3}{4}$ to 1, excl.	2.5	3.0	3.5	4.0	4.5	5.0	6.0	7.0	8.0	9.0
1 to 2, incl.	2.5	2.5	3.0	3.5	4.0	4.5	5.0	6.0	7.0	8.0

[a] The term "lot" applied to the above table means all of the plates of each group width and each group thickness.
[b] The permissible overweight for lots of circular and sketch plates shall be 25 per cent greater than the amounts given in the above table.
[c] The weight of individual plates shall not exceed the nominal weight by more than 1¼ times the amount given in the table and footnote b.

TABLE IV.—PERMISSIBLE VARIATIONS IN THICKNESS FOR RECTANGULAR PLATES OVER 2 IN. IN THICKNESS.

Specified Thickness, in.	Permissible Variations, in. over Specified Thickness for Widths Given, in.					
	To 36, excl.	36 to 60, excl	60 to 84, excl	84 to 120, excl	120 to 132, excl	132 and over
Over 2 to 3, excl.	$\frac{1}{16}$	$\frac{3}{32}$	$\frac{7}{64}$	$\frac{1}{8}$	$\frac{1}{8}$	$\frac{9}{64}$
3 to 4, incl.	$\frac{5}{64}$	$\frac{3}{32}$	$\frac{7}{64}$	$\frac{1}{8}$	$\frac{1}{8}$	$\frac{9}{64}$

Note.—Permissible variation under specified thickness, 0.01 in.

TABLE V.—PERMISSIBLE VARIATIONS IN THICKNESS[a] OF SHEET AND STRIP.
All Dimensions in Inches.

Specified Thickness, in.	Permissible Variations in Thickness for Widths Given			
Sheet				
	Hot-Rolled		Cold-Rolled	
	48 and Under	Over 48 to 60, incl	48 and Under	Over 48 to 60, incl
	Plus and Minus	Plus and Minus	Plus and Minus	Plus and Minus
0.018 to 0.025, incl.	0.003	0.004	0.002	0.003
Over 0.025 to 0.034, incl.	0.004	0.005	0.003	0.004
Over 0.034 to 0.043, incl.	0.005	0.006	0.004	0.005
Over 0.043 to 0.056, incl.	0.005	0.006	0.004	0.005
Over 0.056 to 0.070, incl.	0.006	0.007	0.005	0.006
Over 0.070 to 0.078, incl.	0.007	0.008	0.006	0.007
Over 0.078 to 0.093, incl.	0.008	0.009	0.007	0.008
Over 0.093 to 0.109, incl.	0.009	0.010	0.007	0.009
Over 0.109 to 0.125, incl.	0.010	0.012	0.008	0.010
Over 0.125 to 0.140, incl.	0.012	0.014	0.008	0.010
Over 0.140 to 0.171, incl.	0.014	0.016	0.009	0.012
Over 0.171 to 0.187, incl.	0.015	0.017	0.010	0.013
Over 0.187 to 0.218, incl.	0.017	0.019	0.011	0.015
Over 0.218 to 0.234, incl.	0.018	0.020	0.012	0.016
Over 0.234 to 0.250, incl.	0.020	0.022	0.013	0.018

	All Widths
	Plus and Minus
Cold-Rolled Strip	
Under 0.006	10[b]
0.006 to 0.015, incl.	0.001
Over 0.015 to 0.050, incl.	0.0015
Over 0.050 to 0.093, incl.	0.0025
Over 0.093 to 0.125, incl.	0.004

[a] Measured ⅜ in. or more from any edge except for strip under 1 in. in width which is measured at any place.
[b] Expressed as per cent of nominal thickness.

TABLE VI.—PERMISSIBLE VARIATIONS IN WIDTH[a] OF SHEARED AND ABRASIVE CUT RECTANGULAR PLATE.[b]

Specified Thickness, in.	Permissible Variations in Width for Widths, Given, in.									
	Up to 30, incl		Over 30 to 72, incl		Over 72 to 108, incl		Over 108 to 144, incl		Over 144 to 160, incl	
	Plus	Minus	Plus	Minus	Plus	Minus	Plus	Minus	Plus	Minus
Sheared:[c]										
$\frac{3}{16}$ to $\frac{5}{16}$, excl.	$\frac{3}{16}$	$\frac{1}{8}$	$\frac{1}{4}$	$\frac{1}{8}$	$\frac{3}{8}$	$\frac{1}{8}$	$\frac{1}{2}$	$\frac{1}{8}$	...	...
$\frac{5}{16}$ to $\frac{1}{2}$, excl.	$\frac{1}{4}$	$\frac{1}{8}$	$\frac{3}{8}$	$\frac{1}{8}$	$\frac{3}{8}$	$\frac{1}{8}$	$\frac{1}{2}$	$\frac{1}{8}$	$\frac{5}{8}$	$\frac{1}{2}$
$\frac{1}{2}$ to $\frac{3}{4}$, excl.	$\frac{3}{8}$	$\frac{1}{8}$	$\frac{3}{8}$	$\frac{1}{8}$	$\frac{1}{2}$	$\frac{1}{8}$	$\frac{5}{8}$	$\frac{1}{8}$	$\frac{3}{4}$	$\frac{1}{8}$
$\frac{3}{4}$ to 1, excl.	$\frac{1}{2}$	$\frac{1}{8}$	$\frac{1}{2}$	$\frac{1}{8}$	$\frac{5}{8}$	$\frac{1}{8}$	$\frac{3}{4}$	$\frac{1}{8}$	$\frac{7}{8}$	$\frac{1}{8}$
1 to 1¼, incl.	$\frac{5}{8}$	$\frac{1}{8}$	$\frac{5}{8}$	$\frac{1}{8}$	$\frac{3}{4}$	$\frac{1}{8}$	$\frac{7}{8}$	$\frac{1}{8}$	1	$\frac{1}{8}$
Abrasive cut:[d, e]										
$\frac{3}{16}$ to 1½, incl.	$\frac{1}{16}$	$\frac{1}{16}$	$\frac{1}{16}$	$\frac{1}{16}$	$\frac{1}{16}$	$\frac{1}{16}$	$\frac{1}{16}$	$\frac{1}{16}$	$\frac{1}{16}$	$\frac{1}{16}$
Over 1½ to 4, incl.	$\frac{1}{8}$	$\frac{1}{8}$	$\frac{1}{8}$	$\frac{1}{8}$	$\frac{1}{8}$	$\frac{1}{8}$	$\frac{1}{8}$	$\frac{1}{8}$	$\frac{1}{8}$	$\frac{1}{8}$

[a] Permissible variations in width for powder or inert arc cut plate shall be as agreed upon between the manufacturer and the purchaser.
[b] Permissible variations in machined, powder or inert arc cut circular plate shall be as agreed upon between the manufacturer and the purchaser.
[c] The minimum sheared width is 10 in. for material ¾ in. and under in thickness and 20 in. for material over ¾ in. in thickness.
[d] The minimum abrasive cut width is 2 in. and increases to 4 in. for thicker plates.
[e] These tolerances are applicable to lengths of 240 in., max. For lengths over 240 in. an additional $\frac{1}{16}$ in. is permitted, both plus and minus.

(*c*) Sheet shall have sheared edges.

(*d*) Plate shall have sheared or cut (machined, abrasive cut, powder cut or inert arc cut) edges, as specified.

Squareness (Sheet)

20. For sheets of all thicknesses, the angle between adjacent sides shall be 90 ± 0.15 deg ($\frac{3}{16}$ in. in 24 in.).

Flatness

21. (*a*) There shall be no flatness requirements for "deep drawing quality," and "spinning quality" sheet and strip (see Appendix I, Sections (*C*) and (*D*), as applicable).

(*b*) Standard flatness tolerances for plate shall conform to the requirements of Table X. "Specially flattened" plate, when so specified, shall have permissible variations in flatness as agreed upon between the manufacturer and the purchaser.

Special Requirements

22. (*a*) Special tolerances other than those specified herein shall be as agreed upon by the manufacturer and the purchaser.

(*b*) Special analyses, test procedures, mechanical properties, and quality requirements not covered by this specification shall be as agreed upon by the manufacturer and the purchaser.

(*c*) When material is intended for nuclear applications and other critical end uses, the manufacturer shall be notified at the time of placement of the inquiry or order to determine if material of quality and inspection procedures normally employed for commercial material to this specification are adequate.

TABLE VII.—PERMISSIBLE VARIATIONS IN DIAMETER FOR SHEARED CIRCULAR PLATES.

Specified Diameter, in.	Permissible Variations Over Specified Diameter for Thickness Given, in.[a]
	To ⅜, incl
20 to 32, excl.	¼
32 to 84, excl.	$\frac{5}{16}$
84 to 108, excl.	⅜
108 to 140, incl.	$\frac{7}{16}$

[a] No permissible variations under.

TABLE VIII.—PERMISSIBLE VARIATIONS IN WIDTH OF SHEET AND STRIP.

Specified Thickness, in.	Specified Width, in.	Permissible Variations in specified width, in.	
		Plus	Minus
Sheet			
0.187 and under	2 and over	0.125	0
Over 0.187 to 0.250, incl.	6 and over	0.125	0
Strip (Slit Edges)			
Slit edge:[a]			
0.009 and under	All widths	0.005	0.005
Over 0.009 to 0.024, incl.	All widths	0.007	0.007
Over 0.024 to 0.075, incl.	14 and under	0.007	0.007
Over 0.075 to 0.100, incl.	14 and under	0.009	0.009
Over 0.100 to 0.125, incl.	14 and under	0.012	0.012

[a] Rolled round or square edge strip in thicknesses of 0.017 to 0.125 in., incl., in widths 3 in. and under, shall have permissible variations of ±0.005 in. Permissible variations for other sizes shall be as agreed upon between the manufacturer and the purchaser.

TABLE IX.—PERMISSIBLE VARIATIONS IN LENGTH[a] OF SHEARED AND ABRASIVE CUT[b] RECTANGULAR PLATE.[c]

Specified Thickness, in.	Permissible Variation in Length for Lengths Given, in.															
	Up to 60, incl		Over 60 to 96, incl		Over 96 to 120, incl		Over 120 to 240, incl		Over 240 to 360, incl		Over 360 to 450, incl		Over 450 to 540, incl		Over 540	
	Plus	Minus	Plus	Minus	Plus	Minus	Plus	Minus	Plus	Minus	Plus	Minus	Plus	Minus	Plus	Minus
Sheared:[d]																
3/16 to 5/16, excl.	3/16	1/8	1/4	1/8	3/8	1/8	1/2	1/8	5/8	1/8	3/4	1/8	7/8	1/8	7/8	1/8
5/16 to 1/2, excl.	3/8	1/8	1/2	1/8	1/2	1/8	1/2	1/8	5/8	1/8	3/4	1/8	7/8	1/8	1	1/8
1/2 to 3/4, excl.	1/2	1/8	1/2	1/8	5/8	1/8	5/8	1/8	3/4	1/8	7/8	1/8	1 1/8	1/8	1 3/8	1/8
3/4 to 1, excl.	5/8	1/8	5/8	1/8	5/8	1/8	3/4	1/8	7/8	1/8	1 1/8	1/8	1 3/8	1/8	1 5/8	1/8
1 to 1 1/4, incl.	3/4	1/8	3/4	1/8	3/4	1/8	7/8	1/8	1 1/8	1/8	1 3/8	1/8	1 5/8	1/8	...	...
Abrasive cut:[e]																
3/16 to 1 1/2, incl.	1/16	1/16	1/16	1/16	1/16	1/16	1/16	1/16	1/16	1/16	1/16	1/16	1/16	1/16	...	...
Over 1 1/2 to 4, incl.	1/8	1/8	1/8	1/8	1/8	1/8	1/8	1/8	1/8	1/8	1/8	1/8	1/8	1/8	...	...

[a] Permissible variations in length for powder or inert arc cut plate shall be as agreed upon between the manufacturer and the purchaser.
[b] Abrasive cut applicable to a maximum length of 144 or 400 in. depending on the thickness and width ordered.
[c] Permissible variations in machined, powder or inert arc cut circular plate shall be as agreed upon between the manufacturer and the purchaser.
[d] The minimum sheared length is 10 in.

In the event that more critical quality or more rigid inspection standards are indicated, the manufacturer and the purchaser shall agree upon such standards prior to production.

Workmanship and Finish

23. The material shall be uniform in quality and temper, smooth, commercially straight or flat, and free from injurious defects.

Marking

24. Unless otherwise specified, each bundle or shipping container shall be marked with the name of the material, this specification number, the size, gross, tare and net weight, consignor and consignee address, contract or order number, or such other information as may be defined in the contract or order.

Certification and Inspection

25. (*a*) Unless otherwise agreed upon between the manufacturer and purchaser, certification shall be based on one of the options described in Paragraphs (*b*) and (*c*). The option desired shall be specified on the individual purchase order (Section 2 (*g*)). In the event that neither of the above options is specified, the basis for acceptance or rejection shall be based on the provisions described in Paragraph (*b*).

(*b*) *Certificate of Compliance.*—The Certificate of Compliance shall consist of the results of the chemical (ladle) analyses of each heat in the shipment and a statement to the effect that material complies with requirements of the specification, based on available production data. No mechanical properties will be furnished on such certificates.

Note 8.—In the event results of both chemical analyses and mechanical property tests are desired, see Section 25(*c*).

(*c*) *Test Reports.*—Test Reports shall consist of a statement to the effect that material complies with the requirements of the specification and the manufacturer shall also include in the Test Report the results of chemical (ladle) analyses of each heat and the results of mechanical property tests for each lot of materials furnished.

Note 9.—Where material is intended for ASME Boiler and Pressure Vessel Code or other code requirements, it shall be the responsibility of the purchaser to determine whether a Certificate of Compliance (Section 25(*b*)) will be acceptable to the responsible inspector or code authority or whether, in such instances a Test Report (Section 25(*c*)) will be required.

(*d*) *Samples for Check Analysis.*—When, in addition to the above options on certification, the purchaser desires to make check analyses, sufficient additional material shall be ordered to provide samples for such check analyses. Analyses shall be made in the purchaser's laboratory or elsewhere at the expense of the purchaser.

(*e*) *Purchaser's Inspection at Place of Manufacture.*—When specified on the purchase order, inspection by the purchaser's representative may be made at the place of manufacture prior to shipment. In such cases, the purchaser or his representative shall state which tests he desires to witness. The manufacturer shall give the purchaser ample notice in writing as to when tests shall be conducted so that the purchaser's representative may witness any tests (excluding check analyses) that he may desire. Unless otherwise agreed upon, if the purchaser's representative does not present himself at the manufacturer's plant within 14 days after the notified

TABLE X.—PERMISSIBLE VARIATIONS FROM FLATNESS OF RECTANGULAR, CIRCULAR, AND SKETCH PLATES.

Specified Thickness, in.	Permissible Variations from a Flat Surface for Thickness and Widths Given, in.								
	To 48, excl	48 to 60, excl	60 to 72, excl	72 to 84, excl	84 to 96, excl	96 to 108, excl	108 to 120, excl	120 to 144, excl	144 and over
3/16 to 1/4, excl.	3/4	1 1/16	1 1/4	1 3/8	1 5/8	1 5/8	...	...	...
1/4 to 3/8, excl.	1 1/16	3/4	1 5/16	1 1/8	1 3/8	1 7/16	1 9/16	1 7/8	...
3/8 to 1/2, excl.	1/2	9/16	1 1/16	3/4	1 1/16	1 1/8	1 1/4	1 7/16	1 3/4
1/2 to 3/4, excl.	1/2	9/16	5/8	5/8	1 3/16	1 1/8	1 1/8	1 1/8	1 3/8
3/4 to 1, excl.	1/2	9/16	5/8	5/8	3/4	1 3/16	1 5/16	1	1 1/8
1 to 2, excl.	1/2	9/16	9/16	9/16	1 1/16	1 1/16	1 1/16	3/4	1
2 to 4, incl.	1/4	5/16	3/8	7/16	1/2	9/16	5/8	3/4	7/8

Note 1.—Permissible variations apply to plates up to 12 ft in length, or to any 12 ft of longer plates.
Note 2.—If the longer dimension is under 36 in. the permissible variation is not greater than 1/4 in.
Note 3.—The shorter dimension specified is considered the width, and the permissible variation in flatness across the width does not exceed the tabular amount for that dimension.
Note 4.—The maximum deviation from a flat surface does not customarily exceed the tabular tolerance for the longer dimension specified.

date set for testing, the manufacturer shall consider mill inspection as having been waived, shall proceed with his own testing, and shall furnish the purchaser with a Certificate of Compliance or a Test Report (Section 25 (*b*) and (*c*)), whichever has been agreed upon between the inspector and the manufacturer.

The manufacturer shall afford the inspector representing the purchaser all reasonable facilities to satisfy him that the material is being furnished in accordance with this specification. Where such plant inspection may involve unusual handling, such as unpacking and repacking, retesting and reinspection and other unusual operations resulting in undue loss of time and production, the manufacturer shall so notify the purchaser.

Rejection

26. Material not conforming to this specification or to authorized modifications thereof shall be subject to rejection.

Rehearing

27. Samples tested in accordance with this specification that represent rejected material shall be preserved for not less than three weeks from the date of the test report. In case of dissatisfaction with the results of the tests, the manufacturer may make claim for a rehearing within that time.

APPENDIX I

The various conditions and finishes in which nickel and low-carbon nickel plate, sheet and strip are procurable are as indicated below. These are subject to change and the manufacturer should be consulted for the latest information available. Low-carbon nickel is intended essentially for fused caustic and other fused salts and for temperatures above 600 F. For such applications, the manufacturer should be consulted.

(A) Plate, Hot-Rolled:

(*A1*) *Annealed Plate.*—Hot rolled and annealed with an oxide surface, and suitable for heavy cold forming. Available with a descaled surface, when so specified.

(*A2*) *As-Rolled Plate.*—As rolled with an oxide surface. Available with a descaled surface, when so specified. Suitable for flat work, mild forming or tube sheets. When intended for tube sheets, specify plates to be "specially-flattened." When intended for hot forming, this should be indicated on the purchase order so that the manufacturer may select material known to have good hot-malleability characteristics.

(B) Sheet, Hot-Rolled:

(*B1*) *Annealed and Pickled Sheet.*—Hot rolled and annealed with a pickled matte finish. Properties similar to (*C1*) but with broader thickness tolerances. Not suggested for applications where the finish of a cold-rolled sheet is considered essential, or for deep drawing or spinning.

(C) Sheet, Cold-Rolled:

(*C1*) *Annealed Sheet.*—Cold rolled, annealed and leveled with a dull or matte finish. A general purpose sheet.

(*C2*) *Spinning Quality Sheet.*—Similar to (*C1*), furnished to slightly lower hardness and to controlled grain size, with leveling omitted, with dull or matte finish.

Note.—Low-carbon nickel is usually preferred to nickel due to lower rate of work hardening.

(*C3*) *Deep Drawing Quality Sheet.*—Similar to (*C2*), lightly leveled to meet drawability requirements, with dull or matte finish. Tested for drawing characteristics.

Note.—Nickel is generally preferred to low-carbon nickel for deep drawing.

(D) Strip, Cold-Rolled:

(*D1*) *Annealed Strip.*—Cold rolled, annealed and leveled or coiled, with a bright finish.

(*D2*) *Spinning Quality Strip.*—Similar to (*D1*), except annealed to controlled grain size and hardness.

(*D3*) *Deep Drawing Quality Strip.*—Similar to (*D2*). Tested for drawing characteristics.

APPENDIX II

PREFERRED THICKNESS FOR WROUGHT NICKEL AND NICKEL-BASE ALLOY SHEET (0.250 IN. AND UNDER) AND STRIP (0.125 IN. AND UNDER.)

It is recommended that wherever possible material purchased to this specification be ordered in thicknesses listed as follows:

All values in inches

0.004	0.010	0.020	0.040	0.080	0.160
0.005	0.011	0.022	0.045	0.090	0.180
0.006	0.012	0.025	0.050	0.100	0.200
0.007	0.014	0.028	0.056	0.112	0.224
0.008	0.016	0.032	0.063	0.125	0.250
0.009	0.018	0.036	0.071	0.140	

SPECIFICATION FOR SEAMLESS NICKEL AND NICKEL ALLOY CONDENSER AND HEAT EXCHANGER TUBES

SB-163

(IDENTICAL WITH ASTM SPECIFICATION B 163-61T EXCEPT THAT THE CONVERTER SIZES HAVE BEEN DELETED)

Scope

1. (*a*) This specification covers seamless cold-drawn tubes of nickel and nickel alloys, as shown in Table I, for use in condenser and heat-exchanger service.

(*b*) Provision is made for two carbon levels in nickel (only) in order that the low-carbon nickel may be selected for corrosive and elevated temperature applications where it may be preferred to that of commercially pure, wrought nickel (see Appendix I).

(*c*) The sizes covered by this specification are 3 in. and under in outside diameter with *minimum* wall thicknesses of 0.148 in. and under, and with *average* wall thicknesses of 0.165 in. and under. Since provision is made for both *minimum* wall and *average* wall tubing the purchaser *must* state which wall is desired.

(*d*) Tubes shall be specified to two dimensions only, for example, outside diameter and *minimum* wall thickness or outside diameter and *average* wall thickness. The inside diameter shall not be specified.

(*e*) Unless otherwise specified, tubes shall be furnished in the following materials in the conditions as indicated:

Material	Condition
Nickel, and low-carbon nickel	Annealed, or stress-relieved
Nickel-copper alloy	Annealed, or stress-relieved
Nickel-chromium-iron alloy	Annealed

NOTE 1.—When agreed upon between the manufacturer and the purchaser stress-relieved tubes, as indicated above, may be furnished with annealed ends (Section 2(*b*) Note, and 9 to 12, incl).

(*f*) Since the material may be used for operating or corrosive conditions or temperatures where the requirements are too particular to be described in general specifications, it is advisable in these instances for the purchaser to submit detailed information to the manufacturer so that an adjustment in processing of the material may be made (Section 17).

(*g*) *Definitions.*—The following definitions will apply:

(*1*) *Tube.*—Tube shall be defined as a hollow product of round or any other cross-section having a continuous periphery.

(*2*) *Average Diameter.*—The average diameter of a tube is the average of the maximum and minimum outside diameters, or the maximum and minimum inside diameters, as determined at any one cross-section of the tube.

Basis of Purchase

2. Orders for material under this specification shall include information with respect to the following:

(*a*) *Alloy* (Section 1 and Table I).

(*b*) *Condition* (*Temper*) Section 1, Table II, and Appendix I.

NOTE 3.—If annealed ends are desired, state length of end to be annealed (Sections 9 to 12, incl).

(*c*) *Finish.*

(*d*) *Dimensions:*

(*1*) *Tube.*—Outside diameter, *minimum* or *average* wall thickness (in inches, not gage number), and length.

(*e*) *Fabrication Operations:*

(*1*) *Cold Bending or Coiling* (Section 4(*c*)).

(*2*) *Packing.*

(*3*) *Rolling or Expanding into Tube Sheets.*

(*4*) *Welding or Brazing.*—Process to be employed.

(*5*) *Pressure Requirements* (Section 10).—Test pressure (other than 1000 psi).

(*6*) *Ends.*—Unless otherwise specified, plain ends cut and deburred will be furnished.

(*f*) *Special Requirements.*—State nature and detail (Section 17).

(*g*) *Certification and Inspection.*—State at the time the order is placed which of the following options, if any, is desired:

(*1*) Furnish *Certificate of Compliance* (includes chemical analyses and certification of compliance but does not include mechanical properties (Section 20(*b*)).

(*2*) Furnish *Test Reports* (includes chemical analyses and mechanical properties (Section 20(*c*)).

(*3*) *Samples for Check Analysis.*—Whether samples for check analysis shall be furnished (Section 20(*d*)).

(*4*) *Inspection at Place of Manufacture.*—Which tests are to be witnessed (Section 20(*e*)).

Material

3. The material shall be of such quality that the finished product shall have the chemical composition, properties and characteristics described in this specification.

Manufacture

4. (*a*) Tube shall be produced by

hot working, annealing, pickling, grinding, cold working, or by any combination of these processes.

(*b*) Tube shall be produced to the condition (temper), finish, and dimensions specified.

(*c*) When material is intended for cold coiling or bending, it shall be so specified on the order so that material suitable for the intended application may be furnished (see Appendix I).

Chemical Composition

5. The material shall conform to the requirements as to chemical composition prescribed in Table I.

TABLE I.—CHEMICAL COMPOSITION.[a]

Alloy	Nickel,[b] per cent	Copper, per cent	Iron, per cent	Manganese, max, per cent	Carbon, max., per cent	Silicon, max, per cent	Sulfur, max, per cent	Chromium, per cent
Nickel	99.0 min	0.25 max	0.40 max	0.35	0.15	0.35	0.01	...
Low-carbon nickel	99.0 min	0.25 max	0.40 max	0.35	0.02	0.35	0.01	...
Nickel-copper alloy	63.0 to 70.0	remainder	2.5 max	1.25	0.3	0.5	0.024	...
Nickel-chromium-iron alloy	72.0 min	0.5 max	6.0 to 10.0	1.0	0.15	0.5	0.015	14.0 to 17.0

[a] For the applicable rounding-off procedure, see Section 15(*b*).
[b] Cobalt counting as nickel.

Samples for Chemical Analysis

6. (*a*) Unless otherwise agreed upon by the manufacturer and the purchaser, heat (ladle) analyses furnished by the manufacturer shall be accepted as defining the composition of the material furnished.

(*b*) If samples for check analysis are desired, they shall be so specified by the purchaser at the time of placement of the order. Samples shall be taken from material representative of each 5000 lb, or fraction thereof, of the finished material, and shall conform to the requirements of Section 5.

(*c*) Such samples for chemical analysis shall be taken in accordance with the procedure described in the Method of Sampling Wrought Non-Ferrous Metals and Alloys for Determination of Chemical Composition (ASTM Designation: E 55). The lot size, portion size and selection of pieces shall be as follows:

Lot Size.—5,000 lb, or fraction thereof, of finished material.

Portion Size.—Pieces from four individual lengths of finished material. If the lot consists of less than four lengths, a piece shall be taken from each individual length.

Minimum Weight of Composite Sample.—150 g divided into three equal parts, one for the manufacturer, one for the purchaser, and one for an umpire, if necessary.

(*d*) Samples for check analyses, when requested after the date of placement of the order, shall be as agreed upon between the manufacturer and the purchaser.

Lots for Mechanical Testing

7. Unless otherwise specified, a lot for mechanical testing of tube shall consist of all material from one heat in the same condition (temper) and the same specified cross-section in a shipment and in no case more than 5,000 lb.

NOTE 4.—Where material cannot be identified by heat, a lot shall consist of not more than 500 lb of material in the same condition (temper) and size.

Sampling for Mechanical Tests

8. (*a*) Samples of the material to provide test specimens for mechanical tests shall be taken from such locations in each lot as to be representative of that lot.

(*b*) When samples are to be taken after delivery, the purchaser of material ordered to cut lengths may arrange with the manufacturer to have an excess length furnished or request on the order additional material of adequate size to provide sample coupons for inspection purposes.

Mechanical Properties

9. The material shall conform to the requirements as to mechanical properties prescribed in Table II

Hydrostatic Test

10. (*a*) Each tube with an outside diameter $\frac{1}{8}$ in. and larger and tubes with wall thickness of 0.015 in. and over shall be tested by the manufacturer to an internal hydrostatic pressure of 1,000 psi provided that the fiber stress calculated in accordance with the following formula does not exceed the allowable fiber stress, S, indicated below:

$$P = \frac{2St}{D}$$

where:

P = hydrostatic test pressure, psi.,

S = allowable fiber stress for material in the condition furnished, as follows:

Annealed low-carbon nickel	8 000 psi
Stress-relieved low-carbon nickel	15 000 psi
Annealed nickel	10 000 psi
Stress-relieved nickel	16 200 psi
Annealed nickel-copper alloy	17 500 psi
Stress-relieved nickel-copper alloy	
$\frac{1}{8}$ to $\frac{7}{8}$ in., incl.	22 500 psi
Other sizes	21 200 psi
Annealed nickel-chromium-iron alloy	20 000 psi

t = minimum wall thickness in inches; equal to the specified *average* wall minus the permissible "minus" wall tolerance, Table III , or the specified *minimum* wall thickness, and

D = outside diameter of the tube in inches.

(*b*) When so agreed upon between the manufacturer and the purchaser, tube may be tested to $1\frac{1}{2}$ times the above allowable fiber stress.

(*c*) When stress-relieved tubes with annealed ends are to be hydrostatically tested, such pressure testing shall be done prior to annealing of the ends of the tube.

Hardness Test

11. (*a*) When tubes are furnished with annealed ends, the Rockwell B or equivalent hardness of the ends after annealing shall not exceed the values indicated in Table II.

(*b*) The Rockwell hardness test may be made on the inside of the tube near the end or on a specimen cut from the end, at the option of the manufacturer. The test shall be made on the inside of the specimen.

TABLE II.—MECHANICAL PROPERTIES[a] OF TUBES.

Material and Condition	Tensile Strength, min, psi	Yield Strength (0.2 per cent offset),[b] min, psi	Elongation in 2 in., min, per cent	Rockwell Hardness[c] (or Equivalent)
Nickel:				
Annealed	55 000	15 000	40	B 65 max
Stress-relieved	65 000	40 000	20	B 75 to B 92
Low-carbon nickel:				
Annealed	50 000	12 000	40	B 62 max
Stress-relieved	60 000	30 000	20	B 70 to B 90
Nickel-copper alloy:				
Annealed	70 000	28 000	35	B 75 max
Stress-relieved:				
$\frac{1}{8}$ to $\frac{7}{8}$ in., incl, in diameter	90 000	55 000	20	B 85 to B 97
Other sizes	85 000	55 000	20	B 85 to B 97
Nickel-chromium-iron alloy:				
Annealed	80 000	35 000	30	B 92 max

[a] For rounding-off procedures, see Section 15(*b*).
[b] See Section 15(*c*).
[c] Rockwell or equivalent hardness values are informative only except for tubes with annealed ends. Hardness values on annealed ends are mandatory requirements.

NOTE 5.—For hardness conversions for nickel and high-nickel alloys see ASTM Hardness Conversion Tables E 140.

NOTE 6.—Caution should be observed in using the Rockwell test on thin material, as the results may be affected by the thickness of specimen. For thicknesses under 0.050 in. the use of the Rockwell superficial or the Vickers hardness test is suggested.

(*c*) The hardness requirements for conditions other than annealed ends are informative only and are not to be used as criteria for acceptance or rejection; the tensile test shall be used as the basis for determining acceptability or rejection. For stress-relieved tubes with annealed ends the hardness requirements for ends, after annealing, are mandatory.

Flare Test

12. (*a*) A flare test shall be made on each end of each random length of annealed and stress-relieved tubing prior to cutting to length. In the case of stress-relieved tubing with annealed ends, the test shall be made on the tubing prior to, or subsequent to, annealing of the ends, at the option of the manufacturer.

(*b*) The flare test shall consist of flaring a test specimen with an expanding tool having an included angle of 60 deg until the specified outside diameter has been increased by 30 per cent.

Test Specimens

13. (*a*) Tension test specimens shall be taken from finished material and tested in the direction of fabrication.

(*b*) Whenever practicable, all tubes shall be tested in full size. If machined specimens are required, such specimens shall be prepared in accordance with Figs. 12 and 13 of the Methods of Tension Testing of Metallic Materials (ASTM Designation: E 8).

Number of Tests

14. (*a*) One tension test shall be made on each lot of 5,000 lb or fraction thereof of tubes in the same alloy, condition and specified cross-section in one shipment.

(*b*) In the case of tubes furnished with annealed ends the tension test shall be made on the stress-relieved tubes prior to annealing.

(*c*) One flare test shall be made on each end of each random length of tubing prior to cutting to length. In the case of tubes with annealed ends the flaring test shall be made prior to or subsequent to annealing.

(*d*) The hardness test shall be made only on tubes with annealed ends. Hardness tests shall be made on 3 per cent of tubes representative of each lot (Section 7) of tubes annealed under the same conditions.

Methods of Test and Chemical Analysis

15. (*a*) The chemical composition and mechanical properties of the material as enumerated in this specification shall be determined, in case of disagreement, in accordance with the following methods of the American Society for Testing Materials:

Test	ASTM Designation[a]
Chemical Analysis	E 38, E 30, E 76
Tension	E 8
Rounding-Off Procedure	E 29
Method of Sampling	E 55
Rockwell Hardness	E 18
Hardness Conversion	E 140

[a] These designations refer to the following methods of testing:
E 38, Methods for Chemical Analysis of Nickel-Chromium Alloys,
E 30, Methods for Chemical Analysis of Nickel,
E 76, Methods for Chemical Analysis of Nickel-Copper Alloys,
E 8, Methods of Tension Testing of Metallic Materials,
E 29, Recommended Practices for Designating Significant Places in Specified Limiting Values,
E 55, Method of Sampling Wrought Non-Ferrous Metals and Alloys for Determination of Chemical Composition,
E 18, Methods of Test for Rockwell Hardness and Rockwell Superficial Hardness of Metallic Materials, and
E 140, Hardness Conversion Tables for Metals Relationship Between Diamond Pyramid Hardness, Brinell Hardness, and Rockwell Hardness).

(*b*) For purposes of determining compliance with the specified limits for requirements of the properties listed in the following table, an observed value or a calculated value shall be rounded off as indicated below, in accordance with the rounding-off method of the Recommended Practices E 29:

Test	Rounded-off Unit for Observed or Calculated Value
Chemical composition, hardness, and tolerances (when expressed in decimals)	nearest unit in the last right-hand place of figures of the specified limit.
Tensile strength, yield strength	nearest 1000 psi.
Elongation	nearest 1 per cent.

(*c*) In lieu of the offset method, the minimum yield strength may be determined as the stress required to produce the elongation under load as calculated by the following formula:

$$X = \left(\frac{Y}{Z} + 0.002\right) \times \text{gage length in inches}$$

where:

X = limiting extension under load in inches,

Y = specified yield strength at 0.2 per cent offset, from Table II and

Z = modulus of elasticity:

Material	Modulus of Elasticity, psi
Nickel and low-carbon nickel	30 000 000
Nickel-copper alloy	26 000 000
Nickel-chromium-iron alloy	31 000 000

In case of dispute the offset method shall be used as the referee procedure.

Permissible Variations in Dimensions and Weight

16. (*a*) *Outside Diameter and Wall Thickness.*—The permissible variations in the outside diameter and wall thickness of tube shall not exceed those prescribed in Table III.

(*b*) *Length.*—When tube is ordered cut-to-length, the length shall not be less than that specified, but a variation of plus $\frac{1}{8}$ in. will be permitted, except that for lengths over 30 ft, a variation of plus $\frac{1}{4}$ in. will be permitted.

(*c*) *Straightness.*—Material shall be reasonably straight and free from bends or kinks.

NOTE 7.—Care should be exercised in handling annealed nickel or low-carbon nickel tube due to the relative softness of the material.

(*d*) *Weight.*—No lot of *minimum* wall tube shall exceed the theoretical weight (calculated at specified *minimum* wall) by more than 20 per cent; no lot of *average* wall tube shall exceed the theoretical weight by more than 10 per cent. The material covered by this specification shall be assumed to weigh as follows:

	Weight, lb per cu in.
Nickel-copper alloy	0.319
Nickel and low-carbon nickel	0.321
Nickel-chromium-iron alloy	0.304

Special Requirements

17. (*a*) Special tolerances other than those specified herein shall be as agreed upon by the manufacturer and the purchaser.

(*b*) Special variations in analysis, test procedures, mechanical properties, and quality requirements not covered by this specification shall be as agreed upon by the manufacturer and the purchaser.

(*c*) Where material is intended for nuclear applications and other critical end uses, the manufacturer shall be notified at the time of placement of the inquiry or order to determine if material of quality and inspection procedures normally employed for commercial material to this specification are adequate. In the event that more critical quality or more rigid inspection standards are indicated, the manufacturer and the purchaser shall agree upon such standards prior to production.

TABLE III.—PERMISSIBLE VARIATIONS IN OUTSIDE DIAMETER AND WALL THICKNESS OF CONDENSER AND HEAT EXCHANGER TUBES.

Material	Nominal Outside Diameter, in.	Permissible Variations[a]					
		Outside Diameter, in.		Wall Thickness, per cent			
				Average Wall		Minimum Wall	
		Plus	Minus	Plus	Minus	Plus	Minus
Nickel, low-carbon nickel, and nickel-copper alloy	$\frac{1}{2}$ to $\frac{5}{8}$, incl.	0.005	0	12.5	12.5	25.0	0
	$\frac{5}{8}$ to $1\frac{1}{2}$, incl.	0.005	0.005	10.0	10.0	20.0	0
	Over $1\frac{1}{2}$ to 3, incl.	0.010	0.010	10.0	10.0	22.0	0
Nickel-chromium-iron alloy	$\frac{1}{2}$ to $\frac{5}{8}$, incl.	0.005	0.005	15.0	15.0	30.0	0
	$\frac{5}{8}$ to $1\frac{1}{2}$, incl.	0.0075	0.0075	10.0	10.0	20.0	0
	Over $1\frac{1}{2}$ to 3, incl.	0.010	0.010	10.0	10.0	22.0	0

[a] Wall variations as indicated above are applicable only to the wall as ordered, for instance, to minimum or to average wall, but not to both.

NOTE 1.—The tolerances in the above table apply to individual measurements of outside diameter and include out-of-roundness (ovality), and apply to all materials and all conditions, except that for thin wall tubes having a nominal wall of 3 per cent or less of the outside diameter, the mean outside diameter shall comply with the permissible variations of the above table and individual measurements (including ovality) shall conform to the plus and minus values of the Table with the values increased by $\frac{1}{2}$ per cent of the nominal outside diameter.

NOTE 2.—The variation in wall thickness in any one cross-section of any one tube shall not exceed plus or minus 10 per cent of the actual (measured) average wall of that section. The actual average wall is defined as the average of the thickest and thinnest wall of that section.

Workmanship and Finish

18. The material shall be uniform in quality and temper, smooth, commercially straight, and free from injurious defects.

Marking

19. Unless otherwise specified, each bundle or shipping container shall be marked with the name of the material, this specification number, the size, gross, tare and net weight, consignor and consignee address, contract or order number, or such other information as may be defined in the contract or order.

Certification and Inspection

20. (*a*) Unless otherwise agreed upon between the manufacturer and the purchaser, certification shall be based on one of the options described in Paragraphs (*b*) and (*c*). The option desired shall be specified on the individual purchase order (Section 2(*g*)). In the event that neither of the options is specified, the basis for acceptance or rejection shall be based on the provisions described in Paragraph (*b*).

(*b*) *Certificate of Compliance.*—The Certificate of Compliance shall consist of the results of the chemical (ladle) analyses of each heat in the shipment and a statement to the effect that material complies with requirements of the specification, based on available production data. No mechanical properties will be furnished on such certificates.

NOTE 8.—In the event results of both chemical analyses and mechanical property tests are desired, see Section 20(*c*).

(*c*) *Test Reports.*—Test Reports shall consist of a statement to the effect that material complies with the requirements of the specification and the manufacturer shall also include in the Test Report the results of chemical (ladle) analyses of each heat and the results of mechanical property tests for each lot of materials furnished.

NOTE 9.—Where material is intended for ASME Boiler and Pressure Vessel Code or other code requirements, it shall be the responsibility of the purchaser to determine whether a Certificate of Compliance (Section 20(*b*)) will be acceptable to the responsible inspector or code authority or whether, in such instances a Test Report (Section 20(*c*)) will be required.

(*d*) *Samples for Check Analysis.*—When, in addition to the above options on certification, the purchaser desires to make check analyses, sufficient additional material shall be ordered to provide samples for such check analyses. Analyses shall be made in the purchaser's laboratory or elsewhere at the expense of the purchaser.

(*e*) *Purchaser's Inspection at Place of Manufacture.*—When so specified, inspection by the purchaser's representative may be made at the place of manufacture prior to shipment. In such cases, the purchaser or his representative shall state which tests he desires to witness. The manufacturer shall give the purchaser ample notice in writing as to when tests shall be conducted so that the purchaser's representative may witness any tests (excluding check analyses) that he may desire. Unless otherwise agreed upon, if the purchaser's representative does not present himself at the manufacturer's plant within 14 days after the notified date set for testing, the manufacturer shall consider mill inspection as having been waived, shall proceed with his own testing, and shall furnish the purchaser with a Certificate of Compliance or a Test Report (Section 20(*b*) and (*c*)), whichever has been agreed upon between the inspector and the manufacturer.

The manufacturer shall afford the inspector representing the purchaser all reasonable facilities, without charge, to satisfy him that the material is being furnished in accordance with this specification. Where such plant inspection may involve unusual handling, such as unpacking and repacking, retesting and reinspection, and other unusual operations resulting in undue loss of time and production, the manufacturer shall so notify the purchaser.

Rejection

21. Material not conforming to this specification or to authorized modifications will be subject to rejection.

Rehearing

22. Samples tested in accordance with this specification that represent rejected material shall be preserved for not less than three weeks from the date of the test report. In case of dissatisfaction with the results of the tests, the manufacturer may make claim for a rehearing within that time.

APPENDIX I

The various materials and conditions described in this specification are intended for rolling or expanding into tube sheets and for other applications as indicated in Sections 1 and 2.

NOTE 1.—Material provided for in the Specification for Nickel Seamless Pipe and Tube (ASTM Designation: B 161), for Nickel-Copper Alloy Seamless Pipe and Tube (ASTM Designation B 165) and for Nickel-Chromium-Iron Alloy Seamless Pipe and Tube (ASTM Designation: B 167) are hot recommended for rolling or expanding into tube sheets.

The low-carbon nickel (0.02 per cent carbon, max.) is intended essentially for corrosive applications such as fused caustic and other fused salts and for service temperatures over 600 F.

The various materials are procurable in the conditions and finishes indicated below, which are suitable for most applications for condenser and heat-exchanger service.

NOTE 2.: **Caution.**—Difficulty may be encountered in rolling or expanding "stress-relieved" tubes into tube sheets that are softer than the tube materials. Such fabricating operations are affected by complex factors such as design, thickness, temper of tube sheet, ligament spacing, tube dimensions, clearance between tube and tube sheet hole, rolling practice, and the like. Where such conditions are encountered and fabrication experience is lacking, the manufacturer should be consulted. (See the Specifications for Nickel-Copper Alloy Plate, Sheet, and Strip (ASTM Designation: B 127), for Nickel Plate, Sheet, and Strip (ASTM Designation: B 162) and for Nickel-Chromium-Iron Alloy Plate, Sheet, and Strip (ASTM Designation: B 168) for recommendations with respect to tube sheet materials.

(A) Nickel:

(*A1*) *Annealed.*—Soft, with a dull matte finish. Suitable for cold coiling or bending and expanding.

(*A2*) *Stress-Relieved.*—Thermally treated below the annealing temperature to relieve the major portion of the internal stresses, with a thin, light to medium-dark surface.

(*A3*) *Stress-Relieved With Annealed Ends.*—Same as (*A2*) except with annealed ends.

NOTE 3.—Intended for those applications where better resistance to erosion is desired in the tube length (between annealed ends) or where greater rigidity is desired than obtainable with fully annealed tubes or where ductility and softness (greater than obtainable with a fully stress-relieved tube) are desired to facilitate rolling and expanding.

(B) Low-Carbon Nickel:

(*B1*) *Annealed.*—Similar to (*A1*) and somewhat softer.

(*B2*) *Stress-Relieved.*—Similar to (*A2*) and somewhat softer.

(*B3*) *Stress-Relieved With Annealed Ends.*—Same as (*B2*) except with annealed ends (see Note 3 in (*A3*)).

(C) Nickel-Copper Alloy:

(*C1*) *Annealed.*—Soft with a dull matte finish.

(*C2*) *Stress-Relieved.*—Thermally treated below the annealing temperature to relieve the major portion of the internal stresses resulting from cold drawing, with a thin, light to medium dark surface.

(*C3*) *Stress-Relieved With Annealed Ends.*—Same as (*C2*) except with annealed ends (see Note 3 in (*A3*)).

(D) Nickel-Chromium- Iron Alloy:

(*D1*) *Annealed and Ground (Pickled).*—The outside diameter is normally ground in the as-drawn condition, after which material is annealed and pickled. Such material is of soft temper, with a ground and pickled outside diameter surface and a dull, matte (pickled) inside diameter surface.

SPECIFICATION FOR NICKEL-COPPER ALLOY ROD AND BAR

SB-164

(IDENTICAL WITH ASTM SPECIFICATION B 164-61 EXCEPT THAT THE FORGING QUALITY HAS BEEN DELETED AND THE MECHANICAL PROPERTIES HAVE BEEN CONSOLIDATED)

Scope

1. (*a*) This specification covers two classes of nickel-copper alloy as follows:

Class A.—Material in hot-finished and cold-drawn rounds, squares, hexagons and rectangles.

Class B.—Machining quality material in hot-finished and cold-drawn rounds, hexagons and squares.

(*b*) *Definitions.*—The terms rod and bar as used in this specification apply to the following:

Rod includes material of round solid section furnished in straight lengths.

Bar includes material of rectangular (flats), hexagonal or square solid section up to and including 10 in. in width and $\frac{1}{8}$ in. and over in thickness in straight lengths.

NOTE 1.—At the manufacturer's option, hot-finished rectangles, in widths 10 in. and under, may be furnished as hot rolled plate with sheared or cut edges in accordance with the Specification for Nickel-Copper Alloy Plate, Sheet, and Strip (ASTM Designation: B 127), providing the mechanical property requirements of Specification B 164 are met.

(*c*) It should be understood that this specification is general. Provision is made herein for material suitable for hot- and cold-working operations, machining, and all other common methods of fabrication. Since the material may be used for purposes where the requirements of the operations are too particular to be prescribed in the general specification, it is advisable in these instances for the purchaser to submit samples or detailed information to the manufacturer and secure an adjustment of processing to suit the actual conditions for which the material is intended (see Section 16).

Basis of Purchase

2. Orders for material under this specification shall include information with respect to the following (see Appendix I) and shall state whether class A or class B material is desired. Class A will be furnished unless class B is specified.

(*a*) *Condition (Temper).*—Hot-Finished, Cold-Drawn, Annealed or Forging Quality (Section 1, Table 1, Appendix I).

(*b*) *Finish.*—Hot-finished, rough-turned, smooth-forged, semi-smooth machined, smooth-finish machined, cold-drawn, annealed, bright-annealed, or annealed and pickled (Section 1, Table I, Appendix I).

(*c*) *Section.*—Rod (round) or bar (square, hexagon, or rectangle).

(*d*) *Dimensions.*—Dimensions, including length (Section 14, Tables II to V, incl).

(*e*) *Special Requirements.*—State nature and details of requirements (Section 16).

(*f*) *Certification and Inspection.*—State at the time the order is placed which of the following options, if any, is desired:

(*1*) Furnish *Certificate of Compliance* (includes chemical analyses and certification of compliance but does not include mechanical properties) (Section 19(*b*)).

(*2*) Furnish *Test Reports* (includes chemical analyses and mechanical properties) (Section 19(*c*)).

(*3*) *Samples for Check Analysis.*—Whether samples for check analysis shall be furnished (Section 19(*d*)).

(*4*) *Inspection at Place of Manufacture.*—Which tests are to be witnessed (Section 19(*e*)).

Material

3. The material shall be of such quality that the finished product shall have the chemical composition, properties and characteristics described in this specification.

Manufacture

4. (*a*) Rod and bar shall be produced by hot-working, annealing, pickling, cold-working, turning, grinding, reannealing, or by any combination of these processes.

(*b*) Rod and bar shall be produced to the class, condition (temper), finish, and dimensions specified (Table I and Appendix I).

Chemical Composition

5. The materials shall conform to the following requirements as to chemical composition:[a]

	Class A	Class B
Nickel,[b] per cent	63.0 to 70.0	63.0 to 70.0
Copper, per cent	remainder	remainder
Iron, max, per cent	2.5	2.5
Manganese, max, per cent	2.0	2.0
Carbon, max, per cent	0.3	0.3
Silicon, max, per cent	0.5	0.5
Sulfur, per cent	0.024 max	0.025 to 0.060

[a] For applicable rounding-off procedures, see Section 13(*b*).
[b] Cobalt counting as nickel.

Samples for Chemical Analysis

6. (*a*) Unless otherwise agreed upon by the manufacturer and the purchaser, heat (ladle) analyses furnished by the manufacturer shall be accepted as defining the composition of the material furnished.

(*b*) If samples for check analysis are desired, they shall be so specified by the purchaser, at the time of placement of the order. Samples shall be taken from material representative of each 5,000 lb, or fraction thereof, of the finished material, and shall conform to the requirements of Section 5.

(*c*) Such samples for chemical analysis shall be taken in accordance with the procedure described in the Method of Sampling Wrought Non-Ferrous Metals and Alloys for Determination of Chemical Composition (ASTM Designation: E 55). The lot size, portion size and selection of pieces shall be as follows:

TABLE I.—MECHANICAL PROPERTIES[a] OF RODS AND BARS.

Condition and Diameter or Distance Between Parallel Surfaces, in.	Tensile Strength, psi	Yield Strength (0.2 per cent offset),[a] min, psi	Elongation in 2 in., min, per cent	Rockwell Hardness[b] (or equivalent)
Class A				
Cold-drawn (as drawn):				
Rounds under $\frac{1}{2}$	85 000 min	55 000	10[h]	...
Squares, hexagons, and rectangles under $\frac{1}{2}$				
Cold-drawn (stress-equalized):[c]				
Rounds, $\frac{1}{2}$ to $3\frac{1}{2}$, incl.	90 000 min	70 000	17	...
Rounds, over $3\frac{1}{2}$ to 4, incl.				...
Squares, hexagons and rectangles, over $\frac{1}{2}$	85 000 min	55 000	20	...
Cold-drawn (stress-relieved):[c]				
Rounds under $\frac{1}{2}$				...
Rounds $\frac{1}{2}$ to $3\frac{1}{2}$, incl.				...
Rounds, over $3\frac{1}{2}$ to 4 incl.				...
Squares, hexagons and rectangles, all sizes	84 000 min	50 000	22[g, h]	...
Hot-finished:				
Rounds, squares, rectangles, all sizes; also hexagons $2\frac{1}{8}$ and under	80 000 min	40 000	30[d]	...
Hexagons, over $2\frac{1}{8}$	75 000 min	30 000	30	...
Rings and disks	...	...	...	75 to 95B
Forged, hot-finished (stress-relieved):				
Rounds, over 4 to 12 in. diameter, incl.	80 000 min	40 000	30	...
Rounds, over 12 in. diameter	75 000 min	40 000	30	...
Annealed:				
Rods and bars, all sizes	70 000 min	25 000	35	...
Rings and disks	...	...	...	60 to 75B
Class B				
Cold-drawn (as drawn):				
Rounds, under $\frac{1}{2}$				
Rounds, $\frac{1}{2}$ to 1, incl.				
Rounds, over 1 to 3, incl.				
Hexagons and squares, 2 and under	85 000 min	50 000	15[e]	80 to 94B
Hot-finished:				
Rounds, 3 and less	75 000 min	35 000	30	...
Annealed:				
Products and sizes as indicated above	70 000 min	25 000	35	60 to 75B

[a] See Section 13(*c*).
[b] Hardness values, indicative of tensile strength, are shown for information only. All hardness tests are subject to confirmation by tensile tests, except for rings and disks.
[c] For hot-finished flats $\frac{5}{16}$ in. and under in thickness the elongation shall be 20 per cent, min.
[d] See Sections (9) and (10) of Appendix I for distinction between "stress-equalized" and "stress-relieved."
[e] For applicable rounding-off procedures, see Section 13(*b*).
[f] For sections under $\frac{1}{2}$ in., the elongation shall be 10 per cent, min.
[g] Not applicable to diameters or cross-sections under $\frac{3}{32}$ in.

Lot Size.—5,000 lb, or fraction thereof, of finished material.

Portion Size.—Pieces from four individual lengths of finished material. If the lot consists of less than four lengths, a piece shall be taken from each individual length.

Minimum Weight of Composite Sample.—150 g divided into three equal parts, one for the manufacturer, one for the purchaser, and one for an umpire, if necessary.

(*d*) Samples for check analyses, when requested after the date of placement of the order, shall be as agreed upon between the manufacturer and the purchaser.

Lots for Mechanical Testing

7. Unless otherwise specified, a lot shall consist of material from one heat of the same class, condition (temper), finish, and cross-section in a shipment, and in no case more than 30,000 lb in weight.

NOTE 2.—Where material cannot be identified by heat, a lot shall consist of not more than 500 lb of material in the same size and condition (temper).

Sampling for Mechanical Tests

8. (*a*) Samples of the material to provide test specimens for mechanical tests shall be taken from such locations in each lot as to be representative of that lot.

(*b*) When samples are to be taken after delivery, the purchaser of material ordered to cut lengths may arrange with the manufacturer to have an excess length furnished or request on the order additional material of adequate size to provide sample coupons for inspection purposes.

Mechanical Properties

9. The material shall conform to the requirements as to mechanical properties prescribed in Table I.

Hardness

10. Rockwell hardness values for class B material are given in Table I. These hardness values are informative only. For hardness conversions, see ASTM Hardness Conversion Tables E 140.

Test Specimens

11. (*a*) Tension test specimens shall

be taken from finished material and tested in the direction of fabrication.

(*b*) All rod and bar, shall be tested in full size when practicable. When a machined specimen becomes necessary, it shall be prepared to the form and dimensions of the test specimen shown in Fig. 8 in the Methods of Tension Testing of Metallic Materials (ASTM Designation: E 8). Flats that are too thin to obtain specimens per Fig. 8 of Methods E 8, and which are too wide to be pulled full size, shall be tested from machined specimens per Figs. 6 and 7 of Methods E 8.

(*c*) For material 1½ in. and under in diameter or thickness, the axis of the test specimen shall coincide with the central axis of the piece. For material over 1½ in. in diameter or thickness, the axis shall be located midway between the center and surface of the piece.

Number of Tests

12. Unless otherwise specified, one tension test shall be made on each lot, as defined in Section 7.

Methods of Testing and Chemical Analysis

13. (*a*) The chemical compositions and mechanical properties of the materials as enumerated in this specification shall be determined in case of disagreement, in accordance with the following methods of the American Society for Testing Materials:

Test	ASTM Designation[a]
Chemical Analysis	E 76
Tension	E 8
Brinell Hardness	E 10
Rockwell Hardness	E 18
Hardness Conversion	E 140
Rounding-off Procedure	E 29
Method of Sampling	E 55

[a] These designations refer to the following methods of testing:
E 76, Methods for Chemical Analysis of Nickel-Copper Alloys,
E 8, Methods of Tension Testing of Metallic Materials,
E 10, Methods of Test for Brinell Hardness of Metallic Materials,
E 18, Methods of Test for Rockwell Hardness and Rockwell Superficial Hardness of Metallic Materials,
E 140, Hardness Conversion Tables for Metals (Relationship between Diamond Pyramid Hardness, Brinell Hardness and Rockwell Hardness),
E 29, Recommended Practices for Designating Significant Places in Specified Limits, and
E 55, Method of Sampling Wrought Non-Ferrous Metals and Alloys for Determination of Chemical Composition.

(*b*) For purposes of determining compliance with the specified limits for requirements of the properties listed in the following table, an observed value or a calculated value shall be rounded off as indicated below, in accordance with the rounding-off method of Recommended Practices E 29.

Test	Rounded-off Unit for Observed or Calculated Value
Chemical composition, hardness, and tolerances (when expressed in decimals)	nearest unit in the last right-hand place of figures of the specified limit.
Tensile strength, yield strength	nearest 1000 psi.
Elongation	nearest 1 per cent.

(*c*) In lieu of the offset method the minimum yield strength may be determined as the stress required to produce the elongation under load as calculated by the following formula:

$$X = \left(\frac{Y}{Z} + 0.002\right) \times \text{gage length in inches}$$

where:
X = the limiting extension under load, inches,
Y = specified yield strength at 0.2 per cent offset, from Table I, and
Z = modulus of elasticity (26,000,000 psi).

In case of dispute the offset method shall be used as the referee procedure.

NOTE 3.—In order that the hardness determinations may be in reasonably close agreement with the values shown in Table I, the following procedure is suggested:

(*1*) For round rod, under ½ in. in diameter, hardness readings shall be taken on a flat surface prepared by filing or grinding approximately $\frac{1}{16}$ in. from the outside surface of the rod.

(*2*) For round rod, ½ in. in diameter and larger, and for hexagons, squares and rectangles, all sizes, hardness readings shall be taken on a cross-section midway between the surface and center of the section.

Permissible Variations in Dimensions

14. (*a*) *Diameter, Thickness, or Width.*—The permissible variations from the specified dimensions as measured on the diameter or between parallel surfaces of cold-drawn rod and bar shall be as prescribed in Table II, and of hot-finished rod and bar as prescribed in Table III.

(*b*) *Out-of-Round.*—Hot-finished rounds and cold-drawn rounds, (except "forging quality") in straight lengths, shall not be out-of-round by more than one-half the total permissible variations in diameter shown in Tables II and III, except for hot-finished rounds ½ in. in diameter and under, which may be out-of-round by the total permissible variations in diameter shown in Table III.

(*c*) *Corners.*—Cold-drawn hexagons, squares and rectangles will have practically exact angles and sharp corners.

(*d*) *Machining Allowances for Hot Finished Materials.*—When the surfaces of hot-finished products are to be machined the allowances prescribed in Table IV are recommended for normal machining operations.

(*e*) *Length.*—The permissible variations in length of cold-drawn and hot-finished rod and bar shall be as prescribed in Table V.

TABLE II.—PERMISSIBLE VARIATIONS IN DIAMETER OR DISTANCE BETWEEN PARALLEL SURFACES OF COLD-DRAWN RODS AND BARS.

Specified Dimension, in.[a]	Permissible Variations Under Specified Dimension, in.[b]
Rounds:	
$\frac{1}{16}$ to $\frac{3}{16}$, excl.	0.002
$\frac{3}{16}$ to $\frac{1}{2}$, excl.	0.003
$\frac{1}{2}$ to $1\frac{5}{16}$, incl.	0.002
Over $1\frac{5}{16}$ to $1\frac{15}{16}$, incl.	0.003
Over $1\frac{15}{16}$ to $2\frac{1}{2}$, incl.	0.004
Over $2\frac{1}{2}$ to 3, incl.	0.005
Over 3 to $3\frac{1}{2}$, incl.	0.006
Over $3\frac{1}{2}$ to 4, incl.	0.007
Hexagons, squares, rectangles:	
$\frac{1}{16}$ to $\frac{3}{16}$, excl.	0.002
$\frac{3}{16}$ to $1\frac{5}{16}$, incl.	0.003
Over $1\frac{5}{16}$ to $1\frac{1}{2}$, incl.	0.004
Over $1\frac{1}{2}$ to 2, incl.	0.005
Over 2 to $2\frac{3}{4}$, incl.	0.006
Over $2\frac{3}{4}$ to 4, incl.	0.007

[a] Dimensions apply to diameter of rounds, to distance across flats of hexagons and squares, and separately to width and thickness of rectangles.
[b] For the applicable rounding-off procedure, see Section 13(*b*).

Unless otherwise specified, random mill lengths will be furnished. Rods and bars ordered to random or nominal (stock) lengths will be furnished with either cropped or saw-cut ends; material ordered to cut lengths will be furnished with square saw-cut or machined ends.

Where rod and bar are ordered in multiple lengths, ¼ in. will be allowed for each multiple cut, unless otherwise specified.

(*f*) *Weight.*—The material covered by this specification shall be assumed to weigh 0.319 lb per cu in.

Straightness

15. (*a*) The permissible variations in straightness of cold-drawn rods and bars as determined by the departure from

TABLE III.—PERMISSIBLE VARIATIONS IN DIAMETER OR DISTANCE BETWEEN PARALLEL SURFACES OF HOT-FINISHED RODS AND BARS.

Specified Dimension, in.[a]	Permissible Variations from Specified Dimension, in.[b]	
	Plus	Minus
Rod and bar, hot-finished:		
1 and under	0.016	0.016
Over 1 to 2, incl.	0.031	0.016
Over 2 to 4, incl.	0.047	0.031
Over 4	0.125	0.063
Round rod, hot-finished, semi-smooth machined, over 4 in.	0.031	0
Round rod, hot-finished and rough-turned, 1 in. and over	0.031	0
Round rod, hot-finished, smooth-finish machined, over 4 in.	0	0.005[c]
Forging quality rounds:[d]		
Under 1	0.005	0.005[d]
1 and over	0.031	0[d]

[a] Dimensions apply to diameter of rounds, to distance across flats of hexagons and squares, and separately to width and thickness of rectangles.
[b] For the applicable rounding-off procedure see Section 13(*b*).
[c] Permissible variations available as plus 0.005 in., minus 0; or plus 0.0025 in., minus 0.0025 in. when so specified.
[d] Spot grinding may be permitted to remove minor surface defects. The depth of these spot ground areas shall not exceed 3 per cent of the diameter of the rod.

true straightness (throw in one revolution or depth of chord) shall be as prescribed in Table VI.

(*b*) The permissible variations in straightness of precision straightened cold-drawn round rod and shafting (class A only), as determined by the departure from straightness (throw in one revolution) in lengths as indicated shall be as prescribed in Table VII.

(*c*) In determining straightness in the standard 42-in. distance between supports or, when specified, in determining straightness in lengths not in excess of those shown in Table VII, the rod shall be placed on a precision table equipped with ball-bearing rollers and a micrometer or dial indicator. The rod shall then be rotated slowly against the indicator, and the deviation from straightness in any portion of the rod between the supports shall not exceed the permissible variations prescribed in Tables VI and VII. The deviation from straightness (throw in one revolution) is defined as the difference between the maximum and minimum readings of the dial indicator in one complete revolution of the rod.

(*d*) The permissible variations in straightness of hot-finished rods and bars as determined by the departure from straightness (throw in one revolution or depth of chord) shall be as specified in Table VIII.

TABLE IV.—NORMAL MACHINING ALLOWANCES FOR HOT-FINISHED MATERIAL.

Finish-Machined Dimensions, in. for Conditions as Indicated Below[a]	Normal Machining Allowance, in.			
	On Diameter, for Rounds	Across Flats, for Hexagons, Squares	For Rectangles	
			On Thickness	On Width
Hot-finished:[b]				
Up to ⅞, incl.	1/16	1/8	1/16	3/16
Over ⅞ to 1⅞, incl.	1/8	3/16	1/8	3/16
Over 1⅞ to 2⅞, incl.	1/8	¼	...	3/16
Over 2⅞ to $3\frac{13}{16}$, incl.	3/16	...	...	3/16
Over $3\frac{13}{16}$	3/16	...	...	3/8
Hot-finished rounds:				
Rough-turned:[c]				
$1\frac{15}{16}$ to 4, incl, in diameter	1/16	...	...	...
Over 4 to 12, incl, in diameter	1/8	...	...	...
Semi-smooth machined:				
Over 4 to 10, incl.	1/16[d]	...	...	...

[a] Dimensions apply to the diameter of rounds, distance across flats of squares and hexagons, and separately to width and thickness of rectangles.
[b] The allowances for hot-finished material in Table IV are recommended for rounds machined in lengths of 3 ft or less and for squares, hexagons and rectangles machined in lengths of 2 ft or less. Hot-finished material to be machined in longer lengths should be specified showing the finished cross-sectional dimension and the length in which the material will be machined in order that the manufacturer may supply material with sufficient oversize, including allowance for out-of-straightness.
[c] Applicable to 3 ft max length.
[d] Applicable to 30 ft max lengths.

TABLE V.—PERMISSIBLE VARIATIONS IN LENGTH OF RODS AND BARS (ALL CLASSES).

Random mill lengths:	
Hot-finished	6 to 24 ft long with not more than 25 per cent by weight between 6 and 9 ft, except for sections weighing over 25 lb per ft and smooth forged products, all sections, short lengths down to 2 ft may be furnished.
Cold-drawn	6 to 20 ft long with not more than 25 per cent by weight between 6 and 10 ft.
Multiple lengths	Furnished in multiples of a specified unit length, within the length limits indicated above. For each multiple, an allowance of ¼ in. will be made for cutting, unless otherwise specified. At the manufacturer's option, individual specified unit lengths may be furnished.
Nominal lengths	Specified nominal lengths having a range of not less than 2 ft, with no short lengths allowed.[a]
Cut lengths	A specified length to which all rods will be cut with a permissible variation of plus ⅛ in., minus 0 for sizes 8 in. and less in diameter or distance across flats. For larger sizes the permissible variation shall be plus ¼ in., minus 0.

[a] For cold-drawn rods and bars under ½ in. in diameter or distance across flats ordered to nominal or stock lengths with a 2-ft range, at least 93 per cent of such material shall be within the range specified, the balance may be in shorter lengths but in no case shall lengths less than 4 ft be furnished.

TABLE VI.—PERMISSIBLE VARIATIONS IN STRAIGHTNESS OF COLD-DRAWN RODS AND BARS.

Specified Diameter or Distance Between Parallel Surfaces, in.	Permissible Variations in Lengths Indicated, in.
Rounds:	
15/16 and under	throw in one revolution: 0.020 in 42-in. length
Over 15/16 to 4, incl.	0.015 in 42-in. length
Squares, hexagons, rectangles:	
All sizes	depth of chord: 0.025 per foot of length

Special Requirements

16. (*a*) Special tolerances other than those specified herein shall be as agreed upon by the manufacturer and the purchaser.

(*b*) Special variations in analysis, test procedures, tolerances, mechanical properties and quality requirements not covered by this specification shall be as agreed upon by the manufacturer and the purchaser.

(*c*) When material is intended for nuclear applications and other critical end uses, the manufacturer shall be notified at the time of placement of the inquiry or order to determine if material of quality and inspection procedures normally employed for commercial material to this specification are adequate. In the event that more critical quality or more rigid inspection standards are indicated, the manufacturer and the purchaser shall agree upon such standards prior to production.

Workmanship and Finish

17. The material shall be uniform in quality and condition, smooth, commercially straight or flat, and free from injurious defects.

Marking

18. Unless otherwise specified, each bundle or shipping container shall be marked with the name of the material, this specification number, the size, gross, tare and net weight, consignor and consignee address, contract or order number, or such other information as may be defined in the contract or order.

TABLE VIII.—PERMISSIBLE VARIATIONS IN STRAIGHTNESS OF HOT-FINISHED RODS AND BARS.[a]

Condition and Finish	Permissible Variations, in. per ft
Rods and bars, hot-finished	0.050[b]
Round rods, hot-finished, ground or rough turned	0.050[c]
Round rods, hot-finished, semi-smooth machined	0.0031[d, e]
Round rods, hot finished, smooth machined	0.0015[d]

[a] Not applicable to forging quality rods.
[b] The maximum curvature (depth of chord) shall not exceed the values indicated multiplied by the length in feet.
[c] The throw in one revolution in any 3 ft of length or fraction thereof.
[d] The throw in one revolution in any 20 ft of length or fraction thereof.
[e] For shafts over 20 to 30 ft, the maximum deviation from straightness (throw in one revolution) will not exceed 0.062 in. over the entire length when supported at the ends.

Certification and Inspection

19. (*a*) Unless otherwise agreed upon between the manufacturer and the purchaser, certification shall be based on one of the options described in Paragraphs (*b*) and (*c*). The option desired shall be specified on the individual purchase order (Section 2 (*f*)). In the event that neither of the above options is specified, the basis for acceptance or rejection shall be based on the provisions described in Paragraph (*b*).

(*b*) *Certificate of Compliance.*—The Certificate of Compliance shall consist of the results of the chemical (ladle) analyses of each heat in a shipment and a statement to the effect that material complies with requirements of the specification, based on available production data. No mechanical properties will be furnished on such certificates.

NOTE 4.—In the event results of both chemical analyses and mechanical property tests are desired see Section 19(*c*).

(*c*) *Test Reports.*—Test Reports shall consist of a statement to the effect that material complies with the requirements of the specification and the manufacturer shall also include in the Test Report the results of chemical (ladle) analyses of each heat and the results of mechanical property tests for each lot of materials furnished.

NOTE 5.—Where material is intended for ASME Boiler and Pressure Vessel Code or other code requirements, it shall be the responsibility of the purchaser to determine whether a Certificate of Compliance (Section 19(*b*)) will be acceptable to the responsible inspector or code authority or whether, in such instances, a Test Report (Section 19(*c*)) will be required.

(*d*) *Samples for Check Analysis.*—When, in addition to the above options on certification, the purchaser desires to make check analyses, sufficient additional material shall be ordered to provide samples for such check analyses. Analyses shall be made in the purchaser's laboratory or elsewhere at the expense of the purchaser.

(*e*) *Purchaser's Inspection at Place of Manufacture.*—When specified on the purchase order, inspection by the purchaser's representative may be made at the place of manufacture prior to shipment. In such cases, the purchaser or his representative shall state which tests he desires to witness. The manufacturer shall give the purchaser ample notice in writing as to when tests shall be conducted so that the purchaser's representative may witness any tests (excluding check analyses) that he may desire. Unless otherwise agreed, if the purchaser's representative does not present himself at the manufacturer's plant within 14 days after the notified date set for testing, the manufacturer shall consider mill inspection as having been waived, shall proceed with his own testing, and shall furnish the purchaser with a Certificate of Compliance or a Test Report (Paragraphs (*b*) and (*c*)), whichever has been agreed upon between the inspector and the manufacturer.

The manufacturer shall afford the inspector representing the purchaser all reasonable facilities to satisfy him that the material is being furnished in accordance with this specification. Where such plant inspection may involve unusual handling, such as unpacking and repacking, retesting and reinspection and other unusual operations resulting in undue loss of time and production, the manufacturer shall so notify the purchaser.

TABLE VII.—PERMISSIBLE VARIATIONS IN STRAIGHTNESS OF PRECISION-STRAIGHTENED COLD-DRAWN SHAFTING (CLASS A ONLY).

Specified Diamter of Shafting, in.	Standard Distance Between Supports	Permissible Variations (Throw in One Revolution) from Straightness, in.
1/4 to 15/16, incl.	42 in.	0.005
Over 15/16 to 1 15/16, incl.	42 in.	0.006
Over 1 15/16 to 2 1/2, incl.	42 in.	0.007
Over 2 1/2 to 4, incl.	42 in.	0.008
3/4 to 15/16, incl.	specified lengths of 3 to 10 ft.	0.004 plus 0.0025 for each foot or fraction thereof in excess of 3 ft.
Over 15/16 to 4, incl.	specified lengths of 20 ft. and less.	0.005 plus 0.0015 for each foot or fraction thereof in excess of 3 ft.

Rejection

20. Material not conforming to this specification or to authorized modifications thereof shall be subject to rejection.

Rehearing

21. Samples tested in accordance with this specification that represent rejected material shall be preserved for not less than three weeks from the date of the test report. In case of dissatisfaction with the results of the tests, the manufacturer may make claim for a rehearing within that time.

APPENDIX I

The various conditions and finishes in which rod and bar are procurable are as follows:

(*1*) *Hot-Finished.*—With a tightly adherent, black, mill oxide surface.

(*2*) (*a*) *Hot-Finished, Rough-Turned.*—Similar to (*1*) except rough turned with a broad nosed tool similar to a bar peeling operation and thus may not be straight. Intended generally for machining where an overhauled surface is desired, essentially for machined step down shafts or parts machined in short lengths of 3 ft or less.

(*b*) Where material is intended for shafting for diameters over 4 in. the "stress-relieved" temper is recommended.

(*3*) (*a*) *Hot-Finished, Semi-Smooth Machined.*—Broad nosed or lathe turned and straightened as per diameter and straightness tolerances specified herein. Intended generally where parts are to be subsequently smooth finish machined.

(*b*) Where material is intended for shafting for diameters over 4 in. the "stress-relieved" temper is recommended.

(*4*) (*a*) *Hot-Finished. Smooth-Finish Machined.*—Lathe machined to tolerances and straightness as specified herein with a smooth finish roughly comparable with rms finish No. 20 to 30. Intended generally for machined parts where minimum subsequent finish machining is desired.

(*b*) Where material is intended for shafting for diameters over 4 in. the "stress-relieved" temper is recommended.

(*7*) *Hot-Finished, Annealed.*—Soft with a tightly adherent oxide that may vary from dark to light.

(*8*) *Hot-Finished, Annealed and Pickled.*—Same as (*7*) except descaled for removal of mill oxide. Provides for better surface inspection than does hot finished material and often employed where welding is involved where removal of mill oxide is desired.

NOTE.—Annealing prior to pickling is required in order to reduce the mill oxide since uniform pickling of an unreduced oxide is difficult.

(*9*) *Cold-Drawn, Stress-Equalized.*—Hot-finished, overhauled, cold-drawn and straightened with a smooth bright finish. Class (A) material 1/4 in. or larger in diameter or distance between parallel faces is thermally treated to equalize internal stresses resulting from cold drawing. Such treatment does not relieve internal stresses resulting from cold drawing (See Section 10 below).

(*10*) *Cold-Drawn, Stress-Relieved.*—Similar to (9) except thermally treated to relieve the major portion of the internal stresses resulting from cold drawing and may have a very thin light to medium oxide. Intended primarily for shafting and for machined parts where minimum "walking" or distortion after metal removal is desired.

(*11*) *Cold-Drawn, Annealed.*—Hot-finished, overhauled, cold-drawn and straightened. Annealed for softness and with a dull matte finish.

NOTE: *Class B Material.*—This is the machining grade and is preferred generally to class A for intricately machined parts, particularly for parts that are to be machined on automatics or require drilling.

APPENDIX II

Material is available commercially in the following sizes. These are for information only as they are subject to change. The manufacturers should be consulted for the latest information available

Condition and Form	Diameter or Distance Across Flats, in.	
	Class A	Class B
ROD (ROUNDS)		
Hot-finished:		
As hot-finished	¼ to 4½, incl	...
Semi-smooth machined	Over 4 to 10, incl	...
Smooth-finished machined	Over 4 to 10, incl	...
Rough-turned or ground[a]	½ to 12, incl	½ to 3, incl.
Bolt tolerance	¼ to 1½, incl	...
Cold-drawn	1/16 to 4, incl	1/16 to 3, incl.
BAR		
Hot-finished:		
Rectangles	⅛ to 6, incl by ½ to 10, incl	...
Squares	⅜ to 6, incl	...
Hexagons	⅜ to 8, incl	...
Cold-drawn:		
Rectangles:		
Thicknesses	1¾ and under	1¾ and under
Widths	4 and under	4 and under
Squares	2⅛ and under	2⅛ and under
Hexagons	2 and under	2 and under

[a] For forging quality material, spot grinding is permitted; however, when machining quality is specified, spot grinding is not permitted.

SPECIFICATION FOR NICKEL-COPPER ALLOY SEAMLESS PIPE AND TUBE

SB-165

(IDENTICAL WITH ASTM SPECIFICATION B 165-61 EXCEPT THAT THE CONVERTER SIZES HAVE BEEN DELETED)

Scope

1. (*a*) This specification covers nickel-copper alloy in cold-drawn (see Paragraph (*b*)) seamless pipe and tube intended for general corrosive service and for mechanical applications, in sizes 8⅝ in. and under in outside diameter, and with wall thicknesses of 0.500 in. and under. Pipe is available in various schedules (Appendix II). Tube may be specified to two dimensions only (length excepted) as follows:

(*1*) Outside diameter and *average* wall (preferred) (Note 1),

(*2*) Outside diameter and inside diameter (Note 2), or

(*3*) Inside diameter and *average* wall (Note 2).

NOTE 1.—Tube produced to outside diameter and *minimum* wall, may be furnished upon agreement between the manufacturer and the purchaser.

NOTE 2.—Tube is available commercially in a wide range of outside diameters and wall thicknesses. When produced to outside diameter and inside diameter and to inside diameter and *average* wall, the range of sizes is more limited and the manufacturer should be consulted as to whether dies and tools are available or whether the sizes desired will necessitate production of special dies and tools.

(*b*) *Definitions.*—The following definitions will apply:

(*1*) *Tube.*—A hollow product of round or any other cross-section having a continuous periphery.

(*2*) *Pipe.*—Seamless tube conforming to the particular dimensions commercially known as "standard pipe sizes" (see Appendix II).

(*3*) *Average Diameter.*—The average diameter of a tube is the average of the maximum and minimum outside diameters, or the maximum and minimum inside diameters, as determined at any one cross-section of the tube.

(*c*) Hot-finished (extruded) tube is available in some of the sizes provided for in this specification and also in larger diameters and heavier wall thicknesses than indicated in Paragraph (*a*). The surface condition, properties and permissible tolerances in this specification are not applicable to such material, and the manufacturer should be consulted.

(*d*) For tube intended for condenser and heat-exchanger service, reference should be made to the Specification for Seamless Nickel and Nickel Alloy Condenser and Heat-Exchanger Tube (ASTM Designation: B 163).

(*e*) Material is available in the following conditions (tempers) and finishes (Appendix I):

(*1*) Annealed,

(*2*) Stress-relieved,

(*f*) It should be understood that this specification is general. Provision is made herein for material suitable for hot- and cold-working operations, machining, welding and other common methods of fabrication. Since the material may be used for purposes where the requirements of the operations are too particular to be prescribed in general specifications, it is advisable in these instances for the purchaser to submit samples or detailed information to the manufacturer and secure an adjustment of processing to suit the conditions for which the material is intended (see Section 15).

Basis of Purchase

2. Orders for material under this specification shall include information with respect to the following:

(*a*) *Condition* (*Temper*) (Table I and Appendix I).

(*b*) *Finish* (Appendix I).

(*c*) *Dimensions:*

(*1*) *Tube.*—Outside diameter, *average* wall thickness (in inches, not gage number), and length. (See Notes 1 and 2 in Section 1 (*a*), for *minimum* wall tube and for tube ordered to outside diameter and inside diameter or to inside diameter and *average* wall.)

(*2*) *Pipe.*—Iron pipe size and schedule (Appendix II).

(*d*) *Fabrication Details.*—Not mandatory but helpful to the manufacturer:

(*1*) *Cold Bending or Coiling.*

(*2*) *Hot Forming* (Section 4 (*d*)).

(*3*) *Welding or Brazing.*—Process to be employed.

(*4*) *Pressure Requirements* (Section 10).—Test pressure (other than 1,000 psi).

(*5*) *Machining.*—Indicate finished size and length in which to be machined and whether to be chucked to outside diameter or inside diameter.

(*6*) *Ends.*—Unless otherwise specified, plain ends cut and deburred will be furnished. If threaded ends or ends beveled for welding are desired, give details.

(*e*) *Special Requirements.*—State nature and detail (Section 15).

(*f*) *Certification and Inspection.*—State at the time the order is placed which of the following options, if any, is desired:

(*1*) Furnish *Certificate of Compliance* (includes chemical analyses and certification of compliance but does not include mechanical properties, (Section 18 (*b*)).

(*2*) Furnish *Test Reports*, (includes chemical analyses and mechanical properties (Section 18 (*c*)).

(*3*) *Samples for Check Analysis.*—Whether samples for check analysis shall be furnished (See Section 18 (*d*)).

(*4*) *Inspection at Place of Manufacture.*—Which tests are to be witnessed (Section 18 (*e*)).

Material

3. The material shall be of such quality that the finished product shall have the chemical composition, properties and characteristics described in this specification.

Manufacture

4. (*a*) Pipe and tube shall be produced by hot working, annealing, pickling, grinding, cold working, or by any combination of these processes.

(*b*) Pipe and tube shall be produced to the condition (temper), finish, and dimensions specified.

(*c*) When material is intended for cold coiling or bending, it shall be so specified on the order so that material suitable for the intended application may be furnished (see Appendix I).

(*d*) When material is specified "hot-forming quality," the manufacturer will furnish material from heats of good, known hot malleability.

Chemical Composition

5. The material shall conform to the following requirements as to chemical composition:[a]

Nickel,[b] per cent	63.0 to 70.0
Copper, per cent	remainder
Iron, max, per cent	2.5
Manganese, max, per cent	2.0
Carbon, max, per cent	0.3
Silicon, max, per cent	0.5
Sulfur, max, per cent	0.024

[a] For the applicable rounding-off procedure, see Section 13 (*b*).

[b] Cobalt counting as nickel.

Samples for Chemical Analysis

6. (*a*) Unless otherwise agreed upon by the manufacturer and the purchaser, heat (ladle) analyses furnished by the manufacturer shall be accepted as defining the composition of the material furnished.

(*b*) If samples for check analysis are desired, they shall be so specified by the purchaser at the time of placement of the order. Samples shall be taken from material representative of each 5000 lb, or fraction thereof, of the finished material, and shall conform to the requirements of Section 5.

(*c*) Such samples for chemical analysis shall be taken in accordance with the procedure described in the Method of Sampling Wrought Non-Ferrous Metals and Alloys for Determination of Chemical Composition (ASTM Designation: E 55). The lot size, portion size and selection of pieces shall be as follows:

Lot Size.—5,000 lb, or fraction thereof, of finished material.

Portion Size.—Pieces from four individual lengths of finished material. If the lot consists of less than four lengths, a piece shall be taken from each individual length.

Minimum Weight of Composite Sample—150 g divided into three equal parts one for the manufacturer, one for the purchaser, and one for an umpire, if necessary.

(*d*) Samples for check analyses, when requested after the date of placement of the order, shall be as agreed upon between the manufacturer and the purchaser.

Lots for Mechanical Testing

7. Unless otherwise specified, a lot for mechanical testing of pipe or tube shall consist of all material from one heat in the same condition (temper) and the same specified cross-section in a shipment and in no case more than 25,000 lb.

NOTE 3.—Where material cannot be identified by heat, a lot shall consist of not more than 500 lb of material in the same condition (temper) and size.

Sampling for Mechanical Tests

8. (*a*) Samples of the material to provide test specimens for mechanical tests shall be taken from such locations in each lot as to be representative of that lot.

(*b*) When samples are to be taken after delivery, the purchaser of material ordered to cut lengths may arrange with the manufacturer to have an excess length furnished or request on the order additional material of adequate size to provide sample coupons for inspection purposes.

TABLE I.—MECHANICAL PROPERTIES[a] OF PIPE AND TUBE.

Condition and Size	Tensile Strength, min, psi	Yield Strength,[c] min, psi (0.2 per cent offset)	Elongation in 2 in. min, per cent
Annealed:			
5 in. outside diameter and under	70 000	28 000	35
Over 5 in. outside diameter	70 000	25 000	35
Stress-relieved			
All sizes	85 000	55 000	15
Hot-forming quality (as drawn):			
All sizes	[d]	[d]	[d]

[a] For the applicable rounding-off procedure, see Section 13 (*b*).

[c] See Section 13(*c*).

[d] "Hot forming quality" pipe and tube is furnished to chemical requirements and surface inspection only. No tensile properties are required.

Mechanical Properties

9. The material shall conform to the requirements as to mechanical properties prescribed in Table I.

Hydrostatic Test

10. (*a*) Each pipe or tube with an outside diameter of ⅛ in. or larger and tubes with wall thicknesses of 0.015 in. and over shall be tested by the manufacturer to an internal hydrostatic pressure of 1,000 psi provided that the fiber stress calculated in accordance with the following formula does not exceed the allowable fiber stress, *S*, indicated below:

$$P = \frac{2St}{D}$$

where:

P = hydrostatic test pressure, psi,

S = allowable fiber stress for material in the condition furnished, as follows:

Annealed:	
5 in. outside diameter and under	17 500 psi
Over 5 in. outside diameter	16 700 psi
Stress relieved:	
All sizes	21 200 psi

t = minimum wall thickness in inches; equal to the specified *average* wall minus the permissible "minus" wall tolerance, Table II, or the specified *minimum* wall thickness, and

D = outside diameter of the tube in inches.

(*b*) When so agreed upon between the manufacturer and the purchaser, pipe or tube may be tested to 1½ times the above allowable fiber stress provided such a requirement does not require testing to a hydrostatic test pressure in excess of 5,500 psi.

Test Specimens

11. (*a*) Tension test specimens shall be taken from finished material and tested in the direction of fabrication.

(*b*) Whenever practicable, all pipe and tube shall be tested in full size. If machined specimens are required, such specimens shall be prepared in accordance with Figs. 12 and 13 of the Methods of Tension Testing of Metallic Materials (ASTM Designation: E 8).

Number of Tests

12. Unless otherwise specified, one tension test shall be made on each lot of pipe and tube as defined in Section 7.

Methods of Test and Chemical Analysis

13. (*a*) The chemical composition and mechanical properties of the material as enumerated in this specification shall be determined, in case of disagreement, in accordance with the following methods of the American Society for Testing Materials:

Test	ASTM Designation[a]
Chemical Analysis	E 76
Tension	E 8
Rounding-Off Procedure	E 29
Method of Sampling	E 55
Rockwell Hardness	E 18
Hardness Conversion	E 140

[a] These designations refer to the following methods of testing:

E 76, Methods for Chemical Analysis of Nickel-Copper Alloys,

E 8, Methods of Tension Testing of Metallic Materials,

E 29, Recommended Practices for Designating Significant Places in Specified Limiting Values,

E 55, Method of Sampling Wrought Non-Ferrous Metals and Alloys for Determination of Chemical Composition,

E 18, Methods of Test for Rockwell Hardness and Rockwell Superficial Hardness of Metallic Materials, and

E 140, Hardness Conversion Table for Metals (Relationship Between Diamond Pyramid Hardness, Brinell Hardness, and Rockwell Hardness.

(*b*) For purposes of determining compliance with the specified limits for requirements of the properties listed in the following table, an observed value or a calculated value shall be rounded off as indicated below, in accordance with the rounding-off method of the Recommended Practices E 29:

Test	Rounded-off Unit for Observed or Calculated Value
Chemical composition, hardness, and tolerances (when expressed in decimals)	nearest unit in the last right-hand place of figures of the specified limit.
Tensile strength, yield strength	nearest 1000 psi.
Elongation	nearest 1 per cent.

(*c*) In lieu of the offset method, the minimum yield strength may be determined as the stress required to produce the elongation under load as calculated by the following formula:

$$X = \left(\frac{Y}{Z} + 0.002\right) \times \text{gage length in inches}$$

where:

X = limiting extension under load in inches,

Y = specified yield strength at 0.2 per cent offset, from Tables I . and

Z = modulus of elasticity (26,000,000 psi).

In case of dispute the offset method shall be used as the referee procedure.

Permissible Variations in Dimensions and Weight

14. (*a*) *Diameter and Wall Thickness.*—The permissible variations in the outside and inside diameter and wall thickness of pipe and tube shall not exceed those prescribed in Table II.

(*b*) Permissible variations given in Table II are applicable only to two dimensions. Thus, if outside diameter and wall are specified, the inside diameter may not conform to the permissible variations shown. Similarly, if outside diameter and inside diameter are specified, the wall may not conform to the permissible variations shown.

(*c*) *Length.*—When pipe or tube is ordered cut-to-length, the length shall not be less than that specified, but a variation of plus ⅛ in. will be permitted, except that for lengths over 30 ft, a variation of plus ¼ in. will be permitted.

(*d*) *Straightness.*—Material shall be reasonably straight and free from bends or kinks.

(*e*) *Weight.*—No lot of *average* wall tubes shall exceed the calculated weight by more than 10 per cent for tubes 4½ in. and under in outside diameter and not more than 12½ per cent for tubes over 4½ in. in outside diameter. The material covered by this specification shall be assumed to weigh 0.319 lb per cu in.

Special Requirements

15. (*a*) Special tolerances other than those specified herein shall be as agreed upon by the manufacturer and the purchaser.

(*b*) Special variations in analysis, test procedures, mechanical properties, and quality requirements not covered by this specification shall be as agreed upon by the manufacturer and the purchaser.

(*c*) Where material is intended for nuclear applications and other critical end uses, the manufacturer shall be notified at the time of placement of the inquiry or order to determine if material of quality and inspection procedures normally employed for commercial material to this specification are adequate. In the event that more critical quality or more rigid inspection standards are indicated, the manufacturer and the purchaser shall agree upon such standards prior to production.

Workmanship and Finish

16. The material shall be uniform in quality and temper, smooth, commercially straight, and free from injurious defects.

Marking

17. Unless otherwise specified, each bundle or shipping container shall be marked with the name of the material, this specification number, the size, gross, tare and net weight, consignor and consignee address, contract or order number, or such other information as may be defined in the contract or order.

TABLE II.—PERMISSIBLE VARIATIONS[a, b, c, d, e] IN OUTSIDE AND INSIDE DIAMETER AND WALL THICKNESS (AVERAGE WALL).

Specified Outside Diameter or Calculated Nominal Outside Diameter, in. (When Ordered to Inside Diameter and Average Wall)	Permissible Variations			
	Outside Diameter[a] or Inside Diameter,[a, b] in.		Wall Thickness,[c] per cent	
	Plus	Minus	Plus	Minus
Over 0.400 to 5/8, excl.	0.005	0[d]	12.5	12.5
5/8 to 1 1/2, incl.	0.005	0.005	10	10
Over 1 1/2 to 4 1/2, incl.	0.010	0.010	10	10
Over 4 1/2 to 6, incl.	0.015	0.015	12.5	12.5
Over 6 to 7 1/2, incl.	0.020	0.020	12.5	12.5
Over 7 1/2 to 8 5/8, incl.	0.025	0.025	12.5	12.5

[a] The permissible variations in the above table apply to individual measurements, including out-of-roundness (ovality), except for the following conditions:

Thin-Wall Pipe and Tube.—For thin-wall pipe and tube having a nominal wall thickness of 3 per cent or less of the nominal outside diameter, in all conditions (temper), the mean outside diameter or mean inside diameter shall conform to the permissible variations of the above table and individual measurements (including ovality) shall conform to the plus and minus values of the table with the values increased by 0.5 per cent of the nominal outside diameter.

Annealed Pipe and Tube Over 4 1/2 in. in Nominal Outside Diameter.—For annealed pipe and tubing over 4 1/2 in. in nominal outside diameter with a nominal wall thickness greater than 3 per cent of the nominal outside diameter, the mean outside diameter or mean inside diameter shall conform to the permissible variations of the above table and individual measurements shall not exceed twice the permissible variations of the above table.

[b] For pipe and tube, in all tempers, with an inside diameter of less than 1/2 in. which cannot be successfully drawn over a mandrel, the inside diameter shall be governed by the outside diameter and the wall thickness variations.

[c] For pipe and tube in all tempers with an inside diameter less than 50 per cent of the outside diameter, which cannot be successfully drawn over a mandrel, the inside diameter may vary over or under by an amount equal to 10 per cent of the nominal wall thickness and the wall thickness may vary plus or minus 12.5 per cent.

[d] When inside diameter is specified, tubes with an inside diameter of 1/2 in. or over and with an outside diameter of under 5/8 in. shall have a permissible variation in inside diameter of plus and minus 0.005 in.

[e] *Eccentricity.*—The variation in wall thickness in any one cross-section of any one pipe or tube shall not exceed plus or minus 10 per cent of the actual (measured) average wall of that section (defined as the average of the thickest and the thinnest wall in that section).

Certification and Inspection

18. (*a*) Unless otherwise agreed upon between the manufacturer and the purchaser, certification shall be based on one of the options described in Paragraphs (*b*) and (*c*). The option desired shall be specified on the individual purchase order (Section 2 (*f*)). In the event that neither of the options is specified, the basis for acceptance or rejection shall be based on the provisions described in Paragraph (*b*).

(*b*) *Certificate of Compliance.*—The Certificate of Compliance shall consist of the results of the chemical (ladle) analyses of each heat in the shipment and a statement to the effect that material complies with requirements of the specification, based on available production data. No mechanical properties will be furnished on such certificates.

NOTE 4.—In the event results of both chemical analyses and mechanical property tests are desired, see Section 18 (*c*).

(*c*) *Test Reports.*—Test Reports shall consist of a statement to the effect that material complies with the requirements of the specification and the manufacturer shall also include in the Test Report the results of chemical (ladle) analyses of each heat and the results of mechanical property tests for each lot of materials furnished.

NOTE 5.—Where material is intended for ASME Boiler and Pressure Vessel Code or other code requirements, it shall be the responsibility of the purchaser to determine whether a Certificate of Compliance (Section 18 (*b*)) will be acceptable to the responsible inspector or code authority or whether, in such instances a Test Report (Section 18 (*c*)) will be required.

(*d*) *Samples for Check Analysis.*—When, in addition to the above options on certification, the purchaser desires to make check analyses, sufficient additional material shall be ordered to provide samples for such check analyses. Analyses shall be made in the purchaser's laboratory or elsewhere at the expense of the purchaser.

(*e*) *Purchaser's Inspection at Place of Manufacture.*—When so specified, inspection by the purchaser's representative may be made at the place of manufacture prior to shipment. In such cases, the purchaser or his representative shall state which tests he desires to witness. The manufacturer shall give the purchaser ample notice in writing as to when tests shall be conducted so that the purchaser's representative may witness any tests (excluding check analyses) that he may desire. Unless otherwise agreed upon, if the purchaser's representative does not present himself at the manufacturer's plant within 14 days after the notified date set for testing, the manufacturer shall consider mill inspection as having been waived, shall proceed with his own testing, and shall furnish the purchaser with a Certificate of Compliance or a Test Report (Section 18 (*b*) and (*c*)), whichever has been agreed upon between the inspector and the manufacturer.

The manufacturer shall afford the inspector representing the purchaser all reasonable facilities to satisfy him that the material is being furnished in accordance with this specification. Where such plant inspection may involve unusual handling, such as unpacking and repacking, retesting and reinspection and other unusual operations resulting in undue loss of time and production, the manufacturer shall so notify the purchaser.

Rejection

19. Material not conforming to this specification or to authorized modifications will be subject to rejection.

Rehearing

20. Samples tested in accordance with this specification that represent rejected material shall be preserved for not less than three weeks from the date of the test report. In case of dissatisfaction with the results of the tests, the manufacturer may make claim for a rehearing within that time.

APPENDIX I

The various conditions and finishes in which nickel-copper alloy cold-drawn, seamless, pipe and tube are procurable are as indicated below:

(*1*) *Annealed.*—Soft, with a dull matte finish suitable for cold coiling or bending.

(*2*) *Stress-Relieved.*—Thermally treated below the annealing temperature to relieve the major portion of the internal stresses resulting from cold drawing, with a thin, light to medium dark surface except that for light wall tube (other than pipe sizes) in sizes 1/8 to 1 1/2 in. in outside diameter and in all wall thicknesses under 1/8 in. in outside diameter, material may have a bright finish.

NOTE.—Stress-relieved tube to this Specification B 165 is not recommended for rolling or expanding into tube sheets, as it is harder and has less ductility than "stress-relieved" condenser tube provided for in the Specification for Seamless Nickel and Nickel Alloy Condenser and Heat-Exchanger Tubes (ASTM Designation: B 163). When intended for cold coiling or bending, this stress-relieved tube is limited to bending to fairly liberal radii.

(*3*) *Stress Equalized.*—This produot was formerly provided for in Specifications B 165 – 49 T *but is no longer furnished commercially.* Available on special inquiry only.

(*4*) *Hot-Forming Quality.*—Cold-drawn, with a smooth, bright, as-drawn surface. Material is selected from heats of known good, hot malleability. At the manufacturer's option, material may be smooth spot ground for removal of minor surface imperfections.

APPENDIX II

The following schedules of cold-drawn, seamless, nickel-copper alloy pipe are regularly available. Other schedules may be furnished, and the manufacturer should be consulted. This table is published for information only.

TABLE III.—PIPE SCHEDULES.[a]

Nominal Pipe Size, in.	Outside Diameter, in.	Nominal Wall Thickness, in.			
		Schedule Number 5	Schedule Number 10	Schedule Number 40	Schedule Number 80
1/8	0.405	...	0.049	0.068	0.095
1/4	0.540	...	0.065	0.088	0.119
3/8	0.675	...	0.065	0.091	0.126
1/2	0.840	0.065	0.083	0.109	0.147
3/4	1.050	0.065	0.083	0.113	0.154
1	1.315	0.065	0.109	0.133	0.179
1 1/4	1.660	0.065	0.109	0.140	0.191
1 1/2	1.900	0.065	0.109	0.145	0.200
2	2.375	0.065	0.109	0.154	0.218
2 1/2	2.875	0.083	0.120	0.203	0.276
3	3.500	0.083	0.120	0.216	0.300
3 1/2	4.000	0.083	0.120	0.226	0.318
4	4.500	0.083	0.120	0.237	0.337
5	5.563	0.109	0.134	0.258	0.375
6	6.625	0.109	0.134	0.280	0.432
8	8.625	...	...	0.322	0.500

[a] The pipe schedules shown above conform with standards adopted by the American Standards Association.

SPECIFICATION FOR NICKEL-CHROMIUM-IRON ALLOY ROD AND BAR

SB-166

(IDENTICAL WITH ASTM SPECIFICATION B 166-61T EXCEPT THAT THE COLD-DRAWN GRADES, RINGS AND DISKS, AND FORGING QUALITY HAVE BEEN DELETED)

Scope

1. (*a*) This specification covers nickel-chromium-iron alloy in the form of hot-finished rounds, squares, hexagons and rectangles.

(*b*) *Definitions.*—The terms rod and bar as used in this specification apply to the following:

Rod includes material of round solid section furnished in straight lengths.

Bar includes material of rectangular (flats), hexagonal or square solid section up to and including 10 in. in width and $\frac{1}{8}$ in. and over in thickness in straight lengths.

NOTE 1.—At the manufacturer's option, hot-finished rectangles, in widths 10 in. and under, may be furnished as hot-rolled plate with sheared or cut edges in accordance with the Specification for Nickel-Chromium-Iron Plate, Sheet, and Strip (ASTM Designation: B 168), providing the mechanical property requirements of Specification B 166 are met.

(*c*) It should be understood that this specification is general. Provision is made herein for material suitable for hot- and cold-working operations, machining, and all other common methods of fabrication. Since the material may be used for purposes where the requirements of the operations are too particular to be prescribed in the general specification, it is advisable in these instances for the purchaser to submit samples or detailed information to the manufacturer and secure an adjustment of processing to suit the actual conditions for which the material is intended (see Section 16).

Basis of Purchase

2. Orders for material under this specification shall include information with respect to the following (See Appendix I):

(*a*) *Condition (Temper).*—Hot-finished, or annealed (Section 1, Table I, Appendix I).

(*b*) *Finish.*— Hot-finished, rough-turned, smooth-forged, semi-smooth machined, annealed, or annealed and pickled (Section 1, Table I, Appendix I).

(*c*) *Section.*—Rod (round) or bar (square, hexagon, or rectangle).

(*d*) *Dimensions.*—Dimensions including length (Section 14, Tables II to V, incl).

(*e*) *Special Requirements.*—State nature and details of requirements (Section 16).

(*f*) *Certification and Inspection.*—State at the time the order is placed which of the following options, if any, is desired:

(*1*) Furnish *Certificate of Compliance* (includes chemical analyses and certification of compliance but does not include mechanical properties) (Section 19 (*b*)).

(*2*) Furnish *Test Reports* (includes chemical analyses and mechanical properties) (Section 19 (*c*)).

(*3*) *Samples for Check Analysis.*—Whether samples for check analysis shall be furnished (Section 19 (*d*)).

(*4*) *Inspection at Place of Manufacture.*—Which tests are to be witnessed (Section 19 (*e*)).

Material

3. The material shall be of such quality that the finished product shall have the chemical composition, properties and characteristics described in this specification.

Manufacture

4. (*a*) Rod and bar shall be produced by hot-working, annealing, pickling, cold-working, turning, grinding, reannealing, or by any combination of these processes.

(*b*) Rod and bar shall be produced to the condition (temper), finish, and dimensions specified.

Chemical Composition

5. The materials shall conform to the following requirements as to chemical composition:[a]

Nickel,[b] min, per cent	72.0
Chromium, per cent	14.0 to 17.0
Iron, per cent	6.0 to 10.0
Manganese, max, per cent	1.0
Carbon, max, per cent	0.15
Copper, max, per cent	0.5
Silicon, max, per cent	0.5
Sulfur, max, per cent	0.015

[a] For applicable rounding-off procedures, see Section 13(*b*).

[b] Cobalt counting as nickel.

Samples for Chemical Analysis

6. (*a*) Unless otherwise agreed upon by the manufacturer and the purchaser, heat (ladle) analyses furnished by the manufacturer shall be accepted as defining the composition of the material furnished.

(*b*) If samples for check analysis are desired, they shall be so specified by the purchaser, at the time of placement of the order. Samples shall be taken from material representative of each 5,000 lb, or fraction thereof, of the finished material, and shall conform to the requirements of Section 5.

(*c*) Such samples for chemical analysis shall be taken in accordance with the procedure described in the Method of Sampling Wrought Non-Ferrous Metals and Alloys for Determination of Chemical Composition (ASTM Designation: E 55). The lot size, portion size and selection of pieces shall be as follows:

Lot Size.—5,000 lb, or fraction thereof, of finished material.

Portion Size.—Pieces from four individual lengths of finished material. If the lot consists of less than four lengths, a piece shall be taken from each individual length.

Minimum Weight of Composite Sample.—150 g divided into three equal parts, one for the manufacturer, one for the purchaser, and one for an umpire, if necessary.

(*d*) Samples for check analyses, when requested after the date of placement of the order, shall be as agreed upon between the manufacturer and the purchaser.

Lots for Mechanical Testing

7. Unless otherwise specified, a lot shall consist of material from one heat of the same condition (temper), finish, and cross-section in a shipment, and in no case more than 30,000 lb in weight.

NOTE 2.—Where material cannot be identified by heat, a lot shall consist of not more than 500 lb of material in the same size and condition (temper).

Sampling for Mechanical Tests

8. (*a*) Samples of the material to provide test specimens for mechanical tests shall be taken from such locations in each lot as to be representative of that lot.

(*b*) When samples are to be taken after delivery, the purchaser of material ordered to cut lengths may arrange with the manufacturer to have an excess length furnished or request on the order additional material of adequate size to provide sample coupons for inspection purposes.

Mechanical Properties

9. The material shall conform to the requirements as to mechanical properties prescribed in Table I.

Hardness

10. There are no hardness requirements for this material, except for hot finished rings and disks. Where hardness values are desirable, they shall be as agreed upon between the manufacturer and the purchaser.

Test Specimens

11. (*a*) Tension test specimens shall be taken from finished material and tested in the direction of fabrication.

(*b*) All rod and bar shall be tested in full size when practicable. When a machined specimen becomes necessary, it shall be prepared to the form and dimensions of the test specimen shown in Fig. 8 in the Methods of Tension Testing of Metallic Material (ASTM Designation: E 8). Flats that are too thin to obtain specimens per Fig. 8 of Methods E 8, and which are too wide to be pulled full size, shall be tested from machined specimens per Figs. 6 and 7 of Methods E 8.

(*c*) For material 1½ in. and under in diameter or thickness, the axis of the test specimen shall coincide with the central axis of the piece. For material over 1½ in. in diameter or thickness, the axis shall be located midway between the center and surface of the piece.

TABLE I.—MECHANICAL PROPERTIES[a] OF RODS AND BARS.

Condition and Diameter or Distance Between Parallel Surfaces, in.	Tensile Strength, min, psi	Yield Strength[b] (0.2 per cent offset), min, psi	Elongation in 2 in., min, per cent
Hot-finished:			
Rounds:			
¼ to ½, incl.	90 000	40 000	30
Over ½ to 3, incl.	85 000	35 000	30
Over 3	85 000	35 000	30
Squares, hexagons, and rectangles:			
All sizes	85 000	35 000	30[d]
Annealed:			
All bars and rods	80 000[c]	35 000	30[f]

[a] For applicable rounding-off procedures, see Section 13(*b*).

[b] See Section 13(*c*).

[c] 110,000 psi, max.

[d] For hot-finished flats 5/16 in. and under in thickness the elongation shall be 20 per cent, min.

[f] Not applicable to diameters or cross-sections under 3/32 in.

Number of Tests

12. Unless otherwise specified, one tension test shall be made on each lot, as defined in Section 7.

Methods of Testing and Chemical Analysis

13. (*a*) The chemical composition and mechanical properties of the materials as enumerated in this specification shall be determined in case of disagreement, in accordance with the following methods of the American Society for Testing Materials:

Test	ASTM Designation[a]
Chemical Analysis	E 38
Tension	E 8
Brinell Hardness	E 10
Rockwell Hardness	E 18
Hardness Conversion	E 140
Rounding-off Procedure	E 29
Method of Sampling	E 55

[a] These designations refer to the following methods of testing:

E 38, Methods for Chemical Analysis of Nickel-Chromium and Nickel-Chromium-Iron Alloys,
E 8, Methods of Tension Testing of Metallic Materials,
E 10, Methods of Test for Brinell Hardness of Metallic Materials,
E 18, Methods of Test for Rockwell Hardness and Rockwell Superficial Hardness of Metallic Materials,
E 140, Hardness Conversion Table for Metals (Relationship between Diamond Pyramid Hardness, Brinell Hardness and Rockwell Hardness),
E 29, Recommended Practices for Designating Significant Places in Specified Limits, and
E 55, Method of Sampling Wrought Non-Ferrous Metals and Alloys for Determination of Chemical Composition.

(*b*) For purposes of determining compliance with the specified limits for requirements of the properties listed in the following table, an observed value or a calculated value shall be rounded off as indicated below, in accordance with the rounding-off method of Recommended Practices E 29.

Test	Rounded-off Unit for Observed or Calculated Value
Chemical composition, hardness, and tolerances (when expressed in decimals)	nearest unit in the last right-hand place of figures of the specified limit.
Tensile strength, yield strength	nearest 1000 psi.
Elongation	nearest 1 per cent.

(*c*) In lieu of the offset method the minimum yield strength may be determined as the stress required to produce the elongation under load as calculated by the following formula:

$$X = \left(\frac{Y}{Z} + 0.002\right) \times \text{gage length in inches}$$

where:

X = the limiting extension under load, inches,
Y = specified yield strength at 0.2 per cent offset, from Table I, and
Z = modulus of elasticity (31,000,000 psi).

In case of dispute the offset method shall be used as the referee procedure.

NOTE 3.—In order that the hardness determinations may be in reasonably close agreement, the following procedure is suggested:

(*1*) For round rod, under ½ in. in diameter, hardness readings shall be taken on a flat surface prepared by filing or grinding approximately $\frac{1}{16}$ in. from the outside surface of the rod.

(*2*) For round rod, ½ in. in diameter and larger, and for hexagons, squares and rectangles, all sizes, hardness readings shall be taken on a cross-section midway between the surface and center of the section.

Permissible Variations in Dimensions

14. (*a*) *Diameter, Thickness, or Width.*—The permissible variations from the specified dimensions, as measured on the diameter or between parallel surfaces of hot-finished rod and bar shall be as prescribed in Table III.

(*b*) *Out-of-Round*—Hot-finished rounds, all sizes, in straight lengths, shall not be out-of-round by more than one-half the total permissible variations in diameter shown in Table III, except for hot-finished rounds ½ in. in diameter and under, which may be out-of-round by the total permissible variations in diameter shown in Table III.

(*c*) *Machining Allowances for Hot-Finished Materials.*—When the surfaces of hot-finished products are to be machined, the allowances prescribed in Table IV are recommended for normal machining operations.

(*d*) *Length.*—The permissible variations in length of hot-finished rod and bar shall be as prescribed in Table V.

TABLE III.—PERMISSIBLE VARIATIONS IN DIAMETER OR DISTANCE BETWEEN PARALLEL SURFACES OF HOT-FINISHED RODS AND BARS.

Specified Dimension, in.[a]	Permissible Variations from Specified Dimensions, in.[b]	
	Plus	Minus
Rod and bar, hot-finished:		
1 and under	0.016	0.016
Over 1 to 2, incl.	0.031	0.016
Over 2 to 4, incl.	0.047	0.031
Over 4	0.125	0.063
Round rod, hot-finished, semi-smooth machined, over 2½ in.	0.031	0
Round rod, hot-finished and rough-turned, 1 in. and over	0.031	0

[a] Dimensions apply to diameter of rounds, to distance across flats of hexagons and squares, and separately to width and thickness of rectangles.

[b] For rounding-off procedures applicable, see Section 13(*b*).

Unless otherwise specified, random mill lengths will be furnished. Rods and bars ordered to random or nominal lengths will be furnished with either cropped or saw-cut ends; material ordered to cut lengths will be furnished with square saw-cut or machined ends. Where rod and bar are ordered in multiple lengths, ¼ in. will be allowed for each multiple cut, unless otherwise specified.

(*e*) *Weight.*—The material covered by this specification shall be assumed to weigh 0.304 lb per cu in.

Straightness

15. The permissible variations in straightness of hot-finished rods and bars as determined by the departure from straightness (throw in one revolution or depth of chord) shall be as specified in Table VII.

Special Requirements

16. (*a*) Special tolerances other than those specified herein shall be as agreed upon by the manufacturer and the purchaser.

(*b*) Special variations in analysis, test procedures, tolerances, mechanical properties and quality requirements not covered by this specification shall be as agreed upon by the manufacturer and the purchaser.

TABLE VII.—PERMISSIBLE VARIATIONS IN STRAIGHTNESS OF HOT-FINISHED RODS AND BARS.

Condition and Finish	Permissible Variations, in.
Rods and bars, hot-finished	0.050[b]
Round rods, hot-finished, ground or rough turned	0.050[c]
Round rods, hot-finished, semi-smooth machined	0.0031[d,e]

[b] The maximum curvature (depth of chord) shall not exceed the values indicated multiplied by the length in feet.

[c] The throw in one revolution in any 3 ft of length, or fraction thereof.

[d] The throw in one revolution in any 20 ft of length, or fraction thereof.

[e] For shafts over 20 to 30 ft, the maximum deviation from straightness (throw in one revolution) will not exceed 0.062 in. over the entire length when supported at the end.

(*c*) When material is intended for nuclear applications and other critical end uses, the manufacturer shall be notified at the time of placement of the inquiry or order to determine if material of quality and inspection procedures normally employed for commercial material to this specification are adequate. In the event that more critical quality or more rigid inspection standards are indicated, the manufacturer and the purchaser shall agree upon such standards prior to production.

Workmanship and Finish

17. The material shall be uniform in quality and condition, smooth, commercially straight or flat, and free from injurious defects.

Marking

18. Unless otherwise specified, each bundle or shipping container shall be marked with the name of the material, this specification number, the size, gross, tare and net weight, consignor and consignee address, contract or order number, or such other information as may be defined in the contract or order.

Certification and Inspection

19. (*a*) Unless otherwise agreed upon between the manufacturer and the purchaser, certification shall be based on one of the options described in Paragraphs (*b*) and (*c*). The option desired shall be specified on the individual purchase order (Section 2 (*f*)). In the event that neither of the above options is specified, the basis for acceptance or rejection shall be based on the provisions described in Paragraph (*b*).

(*b*) *Certificate of Compliance.*—The Certificate of Compliance shall consist of the results of the chemical (ladle) analyses of each heat in a shipment and a statement to the effect that material complies with requirements of the specification, based on available production data. No mechanical properties will be furnished on such certificates.

NOTE 4.—In the event results of both chemical analyses and mechanical property tests are desired see Section 19(*c*).

(*c*) *Test Reports.*—Test Reports shall consist of a statement to the effect that material complies with the requirements of the specification and the manufacturer shall also include in the Test Report the results of chemical (ladle) analyses of each heat and the results of mechanical property tests for each lot of materials furnished.

NOTE 5.—Where material is intended for ASME Boiler and Pressure Vessel Code or other code requirements, it shall be the responsibility of the purchaser to determine whether a Certificate of Compliance (Section 19(*b*)) will be acceptable to the responsible inspector or code authority or whether, in such instances, a Test Report (Section 19(*c*)) will be required.

(*d*) *Samples for Check Analysis.*—When, in addition to the above options on certification, the purchaser desires to make check analyses, sufficient additional material shall be ordered to provide samples for such check analyses. Analyses shall be made in the purchaser's laboratory or elsewhere at the expense of the purchaser.

(*e*) *Purchaser's Inspection at Place of Manufacture.*—When specified on the purchase order, inspection by the purchaser's representative may be made at the place of manufacture prior to shipment. In such cases, the purchaser or his representative shall state which tests he desires to witness. The manufacturer shall give the purchaser ample notice in writing as to when tests shall be conducted so that the purchaser's representative may witness any tests (excluding check analyses) that he may desire. Unless otherwise agreed, if the purchaser's representative does not present himself at the manufacturer's plant within 14 days after the notified date set for testing, the manufacturer shall consider mill inspection as having been waived, shall proceed with his own testing, and shall furnish the purchaser with a Certificate of Compliance or a Test Report (Paragraphs (*b*) and (*c*)), whichever has been agreed upon between the inspector and the manufacturer.

The manufacturer shall afford the inspector representing the purchaser all reasonable facilities to satisfy him that the material is being furnished in accordance with this specification. Where such plant inspection may involve unusual handling, such as unpacking and repacking, retesting and reinspection and other unusual operations resulting in undue loss of time and production, the manufacturer shall so notify the purchaser.

Rejection

20. Material not conforming to this specification or to authorized modifications thereof shall be subject to rejection.

TABLE IV.—NORMAL MACHINING ALLOWANCES FOR HOT-FINISHED MATERIAL.

Finished-Machined Dimensions, in. for Conditions as Indicated Below[a]	Normal Machining Allowance, in.			
	On Diameter, for Rounds	Across Flats, for Hexagons, Squares	For Rectangles	
			On Thickness	On Width
Hot-Finished:[b]				
Up to 7/8, incl.	1/8	1/8	1/8	3/16
Over 7/8 to 1 7/8, incl.	1/8	3/16	1/8	3/16
Over 1 7/8 to 2 7/8, incl.	3/16	1/4	...	3/16
Over 2 7/8 to 3 1/16, incl.	1/4	...	...	3/16
Over 3 1/16	1/4	...	...	3/8
Hot-Finished Rounds:				
Rough-Turned:[c]				
1 5/16 to 4, incl., in diameter	1/16	...	...	...
Over 4 to 12, incl., in diameter	1/8	...	...	...
Semi-Smooth Machined				
Over 2½ to 4, incl.	1/16[d]	...	...	...
Over 2½ to 4, incl.	1/8[e]	...	...	...
Over 4 to 10, incl.	1/8[f]	...	...	...

[a] Dimensions apply to the diameter of rounds, distance across flats of squares and hexagons, and separately to width and thickness of rectangles.

[b] The allowances for hot-finished material in Table IV are recommended for rounds machined in lengths of 3 ft or less and for squares, hexagons and rectangles machined in lengths of 2 ft or less. Hot-finished material to be machined in longer lengths should be specified showing the finished cross-sectional dimension and the length in which the material will be machined in order that the manufacturer may supply material with sufficient oversize, including allowance for out-of-straightness.

[c] Applicable to 3 ft max length.

[d] Applicable to 10 ft max length.

[e] Applicable to lengths over 10 to 20 ft incl.

[f] Applicable to 30 ft max lengths.

TABLE V.—PERMISSIBLE VARIATIONS IN LENGTH OF RODS AND BARS.

Random mill lengths:	
Hot-finished	6 to 24 ft long with not more than 25 per cent by weight between 6 and 9 ft, except for sections weighing over 25 lb per ft, and smooth forged products, all sections, short lengths down to 2 ft may be furnished.
Multiple lengths	Furnished in multiples of a specified unit length, within the length limits indicated above. For each multiple, an allowance of ¼ in. will be made for cutting, unless otherwise specified. At the manufacturer's option, individual specified unit lengths may be furnished.
Nominal lengths	Specified nominal lengths having a range of not less than 2 ft, with no short lengths allowed.
Cut lengths	A specified length to which all rods will be cut with a permissible variation of plus ⅛ in., minus 0 for sizes 8 in. and less in diameter or distance across flats. For larger sizes, the permissible variation shall be plus ¼ in., minus 0.

Rehearing

21. Samples tested in accordance with this specification that represent rejected material shall be preserved for not less than three weeks from the date of the test report. In case of dissatisfaction with the results of the tests, the manufacturer may make claim for a rehearing within that time.

APPENDIX I

The various conditions and finishes in which rod and bar are procurable are as follows:

(*1*) *Hot-Finished.*—With a tightly adherent, black, mill oxide surface.

(*2*) *Hot-Finished, Rough-Turned.*—Similar to (*1*) except rough turned with a broad nosed tool to a bar peeling operation and thus may not be straight. Intended generally for machining where an overhauled surface is desired, essentially for machined step down shafts or parts machined in short lengths of 3 ft or less.

(*3*) *Hot-Finished, Semi-Smooth Machined.*—Broad nosed or lathe turned and straightened as per diameter and straightness tolerances specified herein. Intended generally where parts are to be subsequently smooth finish machined

(*4*) *Hot-Finished, Annealed.*—Soft, with a tightly adherent dark oxide.

(*5*) *Hot-Finished, Annealed and Pickled.*—Same as (*6*) except descaled for removal of mill oxide. Provides for better surface inspection than does hot finished material and often employed where welding is involved where removal of mill oxide is desired.

NOTE.—Annealing prior to pickling may be required in order to reduce the mill oxide since uniform pickling of an unreduced oxide is difficult.

APPENDIX II

Material is available commercially in the following sizes. These are for information only as they are subject to change. The manufacturers should be consulted for the latest information available.

Condition and Form	Diameter or Distance Across Flats, in.
ROD (ROUNDS)	
Hot-finished:	
As hot-finished	¼ to 4½, incl.
Semi-smooth machined	Over 2½ to 10, incl.
Rough-turned or ground[a]	½ to 12, incl.
BAR	
Hot-finished:	
Rectangles	⅛ to 6, incl. by ½ to 10, incl.
Squares	⅜ to 6, incl.
Hexagons	⅜ to 8, incl.

[a] When machining quality is specified, spot grinding is not permitted.

SPECIFICATION FOR NICKEL-CHROMIUM-IRON ALLOY SEAMLESS PIPE AND TUBE

SB-167

(IDENTICAL WITH ASTM SPECIFICATION B 167-61T EXCEPT THAT THE CONVERTER SIZES HAVE BEEN DELETED)

Scope

1. (*a*) This specification covers nickel-chromium-iron alloy in cold-drawn and hot-finished seamless pipe and tube (see Paragraph (*b*)) intended for general corrosive service and for heat-resisting applications. Cold-drawn pipe and tube is available in sizes of 6⅝ in. and under in outside diameter, and 0.382 in. and under in wall thickness. Cold-drawn pipe is available in various schedules (Appendix II). Hot-finished tube is available in sizes 9¼ in. and under in outside diameter, and 1.0 in. and under in wall thickness. Pipe and tube may be specified to two dimensions only (length excepted) as follows:

(*1*) Outside diameter and *average* wall (preferred) (Note 1),

(*2*) Outside diameter and inside diameter (Note 2), or

(*3*) Inside diameter and *average* wall (Note 2).

NOTE 1.—Tube produced to outside diameter and *minimum* wall may be furnished upon agreement between the manufacturer and the purchaser.

NOTE 2.—Tube is available commercially in a wide range of outside diameters and wall thicknesses. When produced to outside diameter and inside diameter and to inside diameter and *average* wall, the range of sizes is more limited and the manufacturer should be consulted as to whether dies and tools are available or whether the sizes desired will necessitate production of special dies and tools.

(*b*) *Definitions.*—The following definitions will apply.

(*1*) *Tube.*—A hollow product of round or any other cross-section having a continuous periphery.

(*2*) *Pipe.*—Seamless tube conforming to the particular dimensions commercially known as "standard pipe sizes" (Appendix II).

(*3*) *Average Diameter.*—The average diameter of a tube is the average of the maximum and minimum outside diameters, or the maximum and minimum inside diameters, as determined at any one cross-section of the tube.

(*c*) Hot-finished tube is available in larger diameters and heavier wall thicknesses than indicated in Paragraph (*a*). The manufacturer should be consulted for the properties and permissible tolerances for such material.

(*d*) For tube intended for condenser and heat-exchanger service, reference should be made to the Specification for Seamless Nickel and Nickel Alloy Condenser and Heat-Exchanger Tube (ASTM Designation: B 163).

(*e*) Material is available in the following condition (temper) and finishes (Appendix I):

(*1*) As hot finished
(*2*) Annealed

(*f*) It should be understood that this specification is general. Provision is made herein for material suitable for hot- and cold-working operations, machining, welding and other common methods of fabrication. Since the material may be used for purposes where the requirements of the operations are too particular to be prescribed in general specifications, it is advisable in these instances for the purchaser to submit samples or detailed information to the manufacturer and secure an adjustment of processing to suit the conditions for which the material is intended (see Section 15).

Basis of Purchase

2. Orders for material under this specification shall include information with respect to the following:

(*a*) *Condition* (*Temper*) (Table I and Appendix I).

(*b*) *Finish* (Appendix I).

(*c*) *Dimensions:*

(*1*) *Tube.*—Outside diameter, *average* wall thickness (in inches, not gage number), and length. (See Notes 1 and 2 in Section 1(*a*), for *minimum* wall tube and for tube ordered to outside diameter and inside diameter or to inside diameter and *average* wall.)

(*2*) *Pipe.*—Iron pipe size and schedule (Appendix II).

(*d*) *Fabrication Details.*—Not mandatory but helpful to the manufacturer:

(*1*) *Cold Bending or Coiling.*

(*2*) *Hot forming* (Section 4(*d*)).

(*3*) *Welding or Brazing.*—Process to be employed.

(*4*) *Pressure Requirements* (Section 10).—Test pressure (other than 1,000 psi).

(*5*) *Machining.*—Indicate finished size and length in which to be machined and whether to be chucked to outside diameter or inside diameter.

(*6*) *Ends.*—Unless otherwise specified, plain ends cut and deburred will be furnished. If threaded ends or ends beveled for welding are desired, give details.

(*e*) *Special Requirements.*—State nature and detail (Section 15).

(*f*) *Certification and Inspection.*—State at the time the order is placed which of the following options, if any, is desired:

(*1*) Furnish *Certificate of Compliance* (includes chemical analyses and certi-

fication of compliance but does not include mechanical properties, (Section 18(*b*)),

(*2*) Furnish *Test Reports*, (includes chemical analyses and mechanical properties (Section 18(*c*)).

(*3*) *Samples for Check Analysis.*—Whether samples for check analysis shall be furnished (See Section 18(*d*)).

(*4*) *Inspection at Place of Manufacture.*—Which tests are to be witnessed (Section 18(*e*)).

Material

3. The material shall be of such quality that the finished product shall have the chemical composition, properties and characteristics described in this specification.

Manufacture

4. (*a*) Pipe and tube shall be produced by hot working, annealing, pickling, grinding, cold working, or by any combination of these processes.

(*b*) Pipe and tube shall be produced to the condition (temper), finish, and dimensions specified.

(*c*) When material is intended for cold coiling or bending, it shall be so specified on the order so that material suitable for the intended application may be furnished (Appendix I).

(*d*) When material is specified "hot-forming quality," the manufacturer will furnish material from heats of good, known hot malleability.

Chemical Composition

5. The materials shall conform to the to the following requirements as to chemical composition:[a]

Nickel,[b] min, per cent	72.0
Chromium, per cent	14.0 to 17.0
Iron, per cent	6.0 to 10.0
Manganese, max, per cent	1.0
Carbon, max, per cent	0.15
Copper, max, per cent	0.5
Silicon, max, per cent	0.5
Sulfur, max, per cent	0.015

[a] For applicable rounding-off procedures, see Section 13(*b*).

[b] Cobalt counting as nickel.

Samples for Chemical Analysis

6. (*a*) Unless otherwise agreed upon by the manufacturer and the purchaser, heat (ladle) analyses furnished by the manufacturer shall be accepted as defining the composition of the material furnished.

(*b*) If samples for check analysis are desired, they shall be so specified by the purchaser at the time of placement of the order. Samples shall be taken from material representative of each 5000 lb. or fraction thereof, of the finished material, and shall conform to the requirements of Section 5.

(*c*) Such samples for chemical analysis shall be taken in accordance with the procedure described in the Method of Sampling Wrought Non-Ferrous Metals and Alloys for Determination of Chemical Composition (ASTM Designation: E 55). The lot size, portion size and selection of pieces shall be as follows:

Lot size.—5,000 lb, or fraction thereof, of finished material.

Portion Size.—Pieces from four individual lengths of finished material. If the lot consists of less than four lengths, a piece shall be taken from each individual length.

Minimum Weight of Composite Sample.—150 g divided into three equal parts, one for the manufacturer, one for the purchaser, and one for an umpire, if necessary.

(*d*) Samples for check analyses, when requested after the date of placement of the order, shall be as agreed upon between the manufacturer and the purchaser.

Lots for Mechanical Testing

7. Unless otherwise specified, a lot for mechanical testing of pipe or tube shall consist of all material from one heat in the same condition (temper) and the same specified cross-section in a shipment and in no case more than 25,000 lb.

NOTE 3.—Where material cannot be identified by heat, a lot shall consist of not more than 500 lb of material in the same condition (temper) and size.

Sampling for Mechanical Tests

8. (*a*) Samples of the material to provide test specimens for mechanical tests shall be taken from such locations in each lot as to be representative of that lot.

(*b*) When samples are to be taken after delivery, the purchaser of material ordered to cut lengths may arrange with the manufacturer to have an excess length furnished or request on the order additional material of adequate size to provide sample coupons for inspection purposes.

TABLE I.—MECHANICAL PROPERTIES[a] OF PIPE AND TUBE.

Condition and Size	Tensile Strength, min, psi	Yield Strength (0.2 per cent offset), [c] min, psi	Elongation in 2 in., min, per cent
Hot-finished or hot-finished annealed:			
5 in. in outside diameter and under	80 000	30 000	35
Over 5 in. in outside diameter	75 000	25 000	35
Cold-drawn annealed:			
5 in. in outside diameter and under	80 000	35 000	30
Over 5 in. in outside diameter	80 000	30 000	35
Hot-forming quality (hot-finished or annealed):			
All sizes	[d]	[d]	[d]

[a] For the applicable rounding-off procedure, see Section 13(*b*).

[c] See Section 13(*c*).

[d] "Hot forming quality" pipe and tubing is furnished to chemical requirements and surface inspection only. No tensile properties are required.

Mechanical Properties

9. The material shall conform to the requirements as to mechanical properties prescribed in Table I.

Hydrostatic Test

10. (*a*) Each pipe or tube with an outside diameter ⅛ in. and larger and tubes with wall thicknesses of 0.015 in. and over shall be tested by the manufacturer to an internal hydrostatic pressure of 1,000 psi provided that the fiber stress calculated in accordance with the following formula does not exceed the allowable fiber stress, S, indicated below:

$$P = \frac{2St}{D}$$

where:

P = hydrostatic test pressure, psi,

S = allowable fiber stress for material in the condition furnished, as follows:

Hot-finished or hot-finished annealed:	
5 in. outside diameter and under	20 000 psi
Over 5 in. outside diameter	16 700 psi
Cold-drawn annealed:	
All sizes	20 000 psi

t = minimum wall thickness in inches; equal to the specified *average* wall minus the permissible "minus" wall tolerance, Table II, or the specified *minimum* wall thickness, and

D = outside diameter of the tube in inches.

(*b*) When so agreed upon between the manufacturer and the purchaser, pipe or tube may be tested to 1½ times the above allowable fiber stress.

Test Specimens

11. (*a*) Tension test specimens shall be taken from finished material and tested in the direction of fabrication.

(*b*) Whenever practicable, all pipe and tube shall be tested in full size. If machined specimens are required, such specimens shall be prepared in accordance with Figs. 12 and 13 of the Methods of Tension Testing of Metallic Materials (ASTM Designation: E 8).

Number of Tests

12. Unless otherwise specified, one tension test shall be made on each lot of pipe and tube as defined in Section 7.

Methods of Test and Chemical Analysis

13. (*a*) The chemical composition and mechanical properties of the material as enumerated in this specification shall be determined, in case of disagreement, in accordance with the following methods of the American Society for Testing Materials:

Test	ASTM Designation[a]
Chemical Analysis	E 38
Tension	E 8
Rounding-Off Procedure	E 29
Method of Sampling	E 55
Rockwell Hardness	E 18
Hardness Conversion	E 140

[a] These designations refer to the following methods of testing:

E 38, Methods for Chemical Analysis of Nickel-Chromium-Iron Alloys,

E 8, Methods of Tension Testing of Metallic Materials,

E 29, Recommended Practices for Designating Significant Places in Specified Limiting Values,

E 55, Method of Sampling Wrought Non-Ferrous Metals and Alloys for Determination of Chemical Composition,

E 18, Methods of Test for Rockwell Hardness and Rockwell Superficial Hardness of Metallic Materials, and

E 140, Hardness Conversion Tables for Metals (Relationship Between Brinell Hardness, Diamond Pyramid Hardness, Rockwell Hardness, and Rockwel Superficial Hardness).

(*b*) For purposes of determining compliance with the specified limits for requirements of the properties listed in the following table, an observed value or a calculated value shall be rounded off as indicated below, in accordance with the rounding-off method of the Recommended Practices E 29:

Test	Rounded-off Unit for Observed or Calculated Value
Chemical composition, hardness, and tolerances (when expressed in decimals)	nearest unit in the last right-hand place of figures of the specified limit.
Tensile strength, yield strength	nearest 1000 psi.
Elongation	nearest 1 per cent.

(*c*) In lieu of the offset method, the minimum yield strength may be determined as the stress required to produce the elongation under load as calculated by the following formula:

$$X = \left(\frac{Y}{Z} + 0.002\right) \times \text{gage length in inches}$$

where:

X = limiting extension under load in inches,

Y = specified yield strength at 0.2 per cent offset, from Table I, and

Z = modulus of elasticity (31,000,000 psi).

In case of dispute the offset method shall be used as the referee procedure.

Permissible Variations in Dimensions and Weight

14. (*a*) *Diameter and Wall Thickness.*—The permissible variations in the outside and inside diameter and wall thickness of pipe and tube shall not exceed those prescribed in Table II.

(*b*) Permissible variations given in Table II are applicable only to two dimensions. Thus, if outside diameter and wall are specified, the inside diameter may not conform to the permissible variations shown. Similarly, if outside diameter and inside diameter are specified, the wall may not conform to the permissible variations shown.

(*c*) *Length.*—When pipe or tube is ordered cut-to-length, the length shall not be less than that specified, but a variation of plus ⅛ in. will be permitted for cold-drawn material and plus 3/16 in. for hot-finished tube, except that for lengths over 30 ft, a variation of plus ¼ in. will be permitted.

(*d*) *Straightness.*—Cold-drawn material shall be reasonably straight and free from bends and kinks. The camber (depth of chord) of hot-finished tube 5 in. outside diameter and under shall not exceed 0.01 in. per ft multiplied by the length in feet. For sizes over 5 in. outside diameter, the camber shall not exceed 0.015 in. per ft multiplied by the length in feet.

(*e*) *Weight.*—No lot of *average* wall tubes shall exceed the calculated weight by more than 10 per cent for tubes 4½ in. and under in outside diameter and not more than 12½ per cent for tubes over 4½ in. in outside diameter. The material covered by this specification shall be assumed to weigh 0.304 lb per cu in.

Special Requirements

15. (*a*) Special tolerances other than those specified herein shall be as agreed upon by the manufacturer and the purchaser.

(*b*) Special variations in analysis, test procedures, mechanical properties, and quality requirements not covered by this specification shall be as agreed upon by the manufacturer and the purchaser.

(*c*) Where material is intended for nuclear applications and other critical end uses, the manufacturer shall be notified at the time of placement of the inquiry or order to determine if material of quality and inspection procedures normally employed for commercial material to this specification are adequate. In the event that more critical quality or more rigid inspection standards are indicated, the manufacturer and the purchaser shall agree upon such standards prior to production.

Workmanship and Finish

16. The material shall be uniform in quality and temper, smooth, commercially straight, and free from injurious defects.

Marking

17. Unless otherwise specified, each bundle or shipping container shall be marked with the name of the material, this specification number, the size, gross, tare and net weight, consignor and consignee address, contract or order number, or such other information as may be defined in the contract or order.

Certification and Inspection

18. (*a*) Unless otherwise agreed upon between the manufacturer and the purchaser, certification shall be based on

one of the options described in Paragraphs (*b*) and (*c*). The option desired shall be specified on the individual purchase order (Section 2 (*f*)). In the event that neither of the options is specified, the basis for acceptance or rejection shall be based on the provisions described in Paragraph (*b*).

(*b*) *Certificate of Compliance.*—The Certificate of Compliance shall consist of the results of the chemical (ladle) analyses of each heat in the shipment and a statement to the effect that material complies with requirements of the specification, based on available production data. No mechanical properties will be furnished on such certificates.

NOTE 4.—In the event results of both chemical analyses and mechanical property tests are desired, see Section 18(*c*).

(*c*) *Test Reports.*—Test Reports shall consist of a statement to the effect that material complies with the requirements of the specification and the manufacturer shall also include in the Test Report the results of chemical (ladle) analyses of each heat and the results of mechanical property tests for each lot of materials furnished.

NOTE 5.—Where material is intended for ASME Boiler and Pressure Vessel Code or other code requirements, it shall be the responsibility of the purchaser to determine whether a Certificate of Compliance (Section 18(*b*)) will be acceptable to the responsible inspector or code authority or whether, in such instances a Test Report (Section 18(*c*)) will be required.

(*d*) *Samples for Check Analysis.*—When, in addition to the above options on certification, the purchaser desires to make check analyses, sufficient additional material shall be ordered to provide samples for such check analyses. Analyses shall be made in the purchaser's laboratory or elsewhere at the expense of the purchaser.

(*e*) *Purchaser's Inspection at Place of Manufacture.*—When so specified, inspection by the purchaser's representative may be made at the place of manufacture prior to shipment. In such cases, the purchaser or his representative shall state which tests he desires to witness. The manufacturer shall give the purchaser ample notice in writing as to when tests shall be conducted so that the purchaser's representative may witness any tests (excluding check analyses) that he may desire. Unless otherwise agreed upon, if the purchaser's representative does not present himself at the manufacturer's plant within 14 days after the notified date set for testing, the manufacturer shall consider mill inspection as having been waived, shall proceed with his own testing, and shall furnish the purchaser with a Certificate of Compliance or a Test Report (Section 18 (*b*) and (*c*)), whichever has been agreed upon between the inspector and the manufacturer.

TABLE II.—PERMISSIBLE VARIATIONS[a, b, c, d] IN OUTSIDE AND INSIDE DIAMETER AND WALL THICKNESS (AVERAGE WALL).

Specified Outside Diameter or Calculated Nominal Outside Diameter, in. (When Ordered to Inside Diameter and Average Wall)	Permissible Variations			
	Outside Diameter[a] or Inside Diameter,[a, b] in.		Wall Thickness,[c] per cent	
	Plus	Minus	Plus	Minus
Cold-Drawn Pipe and Tube				
0.500 to 5/8, excl	0.005	0.005	15.0	15.0
5/8 to 1 1/2, incl	0.0075	0.0075	10.0	10.0
Over 1 1/2 to 3 1/2, incl	0.010	0.010	10.0	10.0
Over 3 1/2 to 4 1/2, incl	0.015	0.015	10.0	10.0
Over 4 1/2 to 6, incl	0.020	0.020	12.5	12.5
Over 6 to 6 5/8, incl	0.025	0.025	12.5	12.5
Hot Finished Tube[e, f, g, h]				
2 1/2 to 5 1/2, excl	0.031	0.031	12.5[h]	12.5
5 1/2 to 9 1/4, incl	0.047	0.047	12.5	12.5

[a] The permissible variations in the above table apply to individual measurements, including out-of-roundness (ovality), except for the following conditions:

Thin-Wall Pipe and Tube.—For thin-wall pipe and tube having a nominal wall thickness of 3 per cent or less of the nominal outside diameter, in all conditions (temper), the mean outside diameter or mean inside diameter shall conform to the permissible variations of the above table and individual measurements (including ovality) shall conform to the plus and minus values of the table, with the values increased by 0.5 per cent of the nominal outside diameter.

Annealed Pipe and Tube Over 4 1/2 in. in Nominal Outside Diameter.—For annealed pipe and tubing over 4 1/2 in. in nominal outside diameter with a nominal wall thickness greater than 3 per cent of the nominal outside diameter, the mean outside diameter or mean inside diameter shall conform to the permissible variations of the above table and individual measurements shall not exceed twice the permissible variations of the above table.

[b] For pipe and tube, in all tempers, with an inside diameter of less than 1/2 in. which cannot be successfully drawn over a mandrel, the inside diameter shall be governed by the outside diameter and the wall thickness variations.

[c] For pipe and tube in all tempers with an inside diameter less than 50 per cent of the outside diameter, which cannot be successfully drawn over a mandrel, the inside diameter may vary over or under by an amount equal to 10 per cent of the nominal wall thickness and the wall thickness may vary plus or minus 15 per cent.

[d] *Eccentricity.*—The variation in wall thickness in any one cross-section of any one pipe or tube shall not exceed plus or minus 10 per cent of the actual (measured) average wall of that section (defined as the average of the thickest and the thinnest wall in that section).

[e] For tube 5 in. and under in outside diameter the tolerance on the outside diameter applies for individual measurements and includes ovality. For tubes over 5 in. in outside diameter the tolerance is a mean outside diameter tolerance and does not apply to individual measurements or ovality tolerance. Tubes will have reasonable ovality. If a specific ovality requirement is desired the manufacturer should be consulted.

[f] The diameter tolerances for tubes with machined outside and inside diameters shall be +0.031 in., −0 for the outside diameter and +0, −0.062 for the inside diameter.

[g] If tube is specified as minimum wall, the tolerance shall be +28.5 per cent −0.

[h] The wall thickness tolerance includes eccentricity tolerance up to ±12.5 per cent.

The manufacturer shall afford the inspector representing the purchaser all reasonable facilities to satisfy him that the material is being furnished in accordance with this specification. Where such plant inspection may involve unusual handling, such as unpacking and repacking, retesting and reinspection, and other unusual operations resulting in undue loss of time and production, the manufacturer shall so notify the purchaser.

Rejection

19. Material not conforming to this specification or to authorized modifications will be subject to rejection.

Rehearing

20. Samples tested in accordance with this specification that represent rejected material shall be preserved for not less than three weeks from the date of the test report. In case of dissatisfaction with the results of the tests, the manufacturer may make claim for a rehearing within that time.

APPENDIX I

The condition (temper) and various surface finishes in which pipe and tube (other than converter sizes) are procurable are as follows:

(1) *Cold-Drawn Annealed and Ground (Pickled) Tube and Pipe.*—The outside diameter is normally ground in the as-drawn condition, after which material is annealed and pickled. Such material is of soft temper, with a ground and pickled outside diameter surface and a dull, matte (pickled) inside diameter surface. For general purpose applications other than those indicated in (*2*). Available in sizes of 1/4 to 4 in. incl. in outside diameter in both normal and heavy wall tube, and pipe sizes, all schedules, of corresponding outside diameter dimensions.

(2) *Cold-Drawn Annealed and Pickled (Not Ground) Tube and Pipe.*—Available in same sizes as in (*1*) but not ground on outside diameter surface. Soft temper, with dull, matte (pickled) outside diameter and inside diameter surface. Intended primarily for applications such as heat treating, where optimum outside diameter surface (as in (*1*) is not considered essential.

(3) *Cold-Drawn Annealed and Pickled (Not Ground) Tube and Pipe.*—Condition (temper) and surface condition same as (*2*). Intended for all corrosion and heat-resisting applications. Available in sizes over 4 to 6 5/8 in. in outside diameter in all tube wall thicknesses and pipe sizes, all schedules, of corresponding outside diameter dimensions. Tube and pipe in these size ranges is not available with a ground outside diameter surface.

(4) *Hot Finished or Hot Finished-Annealed (Not Pickled) Tube.*—Has an oxide surface resulting from the hot finishing operation. Intended generally for machined parts where the oxide surface will be removed.

(5) *Hot Finished or Hot Finished-Annealed (Pickled) Tube.*—Has the oxide surface removed on both outside and inside diameters by pickling. Surface may be spot ground for removal of minor surface imperfections at the manufacturer's option.

(6) *Hot Finished or Hot Finished-Annealed (Machined Outside and Inside Diameters) Tubes.*—The outside and inside diameter surfaces are machined to specified dimensions. Minor surface imperfections may be spot ground for removal, at the manufacturer's option.

(7) *Hot-Forming Quality.*—Similar to (*1*), (*3*), and (*6*) except may be smooth spot ground for removal of minor surface imperfections, at the manufacturer's option. Selected from heats of good known hot malleability.

APPENDIX II

The following schedules of cold-drawn, seamless nickel-chromium-iron alloy pipe are regularly available. Other schedules may be furnished, and the manufacturer should be consulted. This table is published for information only.

TABLE III.—PIPE SCHEDULES.[a]

Nominal Pipe Size, in.	Outside Diameter, in.	Nominal Wall Thickness, in.			
		Schedule Number 5	Schedule Number 10	Schedule Number 40	Schedule Number 80
1/4	0.540	...	0.065	0.088	...
3/8	0.675	...	0.065	0.091	0.126
1/2	0.840	0.065	0.083	0.109	0.147
3/4	1.050	0.065	0.083	0.113	0.154
1	1.315	0.065	0.109	0.133	0.179
1 1/4	1.660	0.065	0.109	0.140	0.191
1 1/2	1.900	0.065	0.109	0.145	0.200
2	2.375	0.065	0.109	0.154	0.218
2 1/2	2.875	0.083	0.120	0.203	0.276
3	3.500	0.083	0.120	0.216	0.300
3 1/2	4.000	0.083	0.120	0.226	0.318
4	4.500	0.083	0.120	0.237	0.337
5	5.563	...	...	0.258	...
6	6.625	...	...	0.280	...

[a] The pipe schedules shown above conform with standards adopted by the American Standards Association.

SPECIFICATION FOR NICKEL-CHROMIUM-IRON ALLOY PLATE, SHEET, AND STRIP

SB-168

(IDENTICAL WITH ASTM SPECIFICATION B 168-61T EXCEPT THAT THE TEMPERED GRADES OF COLD-ROLLED SHEET AND STRIP HAVE BEEN DELETED)

Scope

1. (*a*) This specification covers rolled nickel-chromium-iron alloy plate, sheet, and strip.

(*b*) *Definitions.*—The following definitions shall apply unless otherwise agreed upon between the manufacturer and the purchaser:

Definition	Thickness, in.	Width, in.
Hot-rolled plate (Note 1)	3/16 and over (Table III and IV)	(Table VI) (Note 3)
Hot-rolled sheet (Note 1)	0.018 to 0.250, incl (Table V)	(Table VIII)
Cold-rolled sheet (Note 2)	0.018 to 0.250, incl (Table V)	(Table VIII)
Cold-rolled strip (Note 2)	0.005 to 0.125, incl (Table V)	(Table VIII)

NOTE 1.—Unless otherwise specified, material 1/16 to 1/4 in., incl, in thickness may be furnished as sheet or plate at the manufacturer's option, providing the material meets the specification requirements for the condition ordered.

NOTE 2.—Unless otherwise specified, material 14 in. and under in width may be furnished as sheet or strip at the manufacturer's option, providing the material meets the specification requirements for the condition ordered.

NOTE 3.—At the manufacturer's option, hot-rolled plate, in widths 10 in. and under, may be furnished as hot-finished rectangles with sheared or cut edges in accordance with the Specification for Nickel-Chromium-Iron Alloy Rod and Bar (ASTM Designation: B 166), providing the mechanical property requirements of Specification B 168 are met.

(*c*) It should be understood that this specification is general. Provision is made herein for material suitable for the general run of drawing, forming, stamping, bending, joining operations, and all other common methods of fabrication. Since the material may be used for purposes where the requirements of the operations are too particular to be prescribed in a general specification, it is advisable in these instances for the purchaser to submit samples or detailed information to the manufacturer and secure an adjustment of processing to suit the conditions for which the material is intended (see Section 22).

Basis of Purchase

2. Orders for material under this specification shall include information with respect to the following:

(*a*) *Condition (Temper).*—Tables I and II and Appendix I.

(*b*) *Finish.*—Appendix I.

(*c*) *Dimensions.*—Thickness (in decimals of an inch, not gage number) (Appendix II), width and length (inch or fraction).

(*d*) *Optional Requirements:*

(*1*) *Strip.*—Whether to be furnished in coil, in cut straight lengths, or in random straight lengths.

(*2*) *Strip.*—Whether to be furnished with commercial slit edge, or square edge or round edge.

NOTE 4.—For strip under 0.025 in. in thickness, state whether grain size other than those shown in Table II is desired.

(*3*) *Plate.*—Whether to be furnished specially flattened (Section 21(*b*)); also how plate is to be cut (Tables VI and IX).

(*e*) *Fabrication Details.*—Not mandatory but are helpful to the manufacturer:

(*1*) *Welding or Brazing.*—Process to be employed.

(*2*) *Plate.*—Whether material is to be hot-formed.

(*f*) *Special Requirements.*—State nature and details of requirements (Section 22).

(*g*) *Certification and Inspection.*—State at the time the order is placed which of the following options, if any, is desired:

(*1*) Furnish *Certificate of Compliance* (includes chemical analyses and certification of compliance but does not include mechanical properties (Section 25 (*b*)).

(*2*) Furnish *Test Reports* (includes chemical analyses and mechanical properties (Section 25(*c*)).

(*3*) *Samples for Check Analysis.*—Whether samples for check analysis should be furnished (Section 25(*d*)).

(*4*) *Inspection at Place of Manufacture.*—Which tests are to be witnessed (Section 25(*e*).)

Material

3. The material shall be of such quality that the finished product shall have the chemical composition, properties and characteristics described in this specification.

Manufacture

4. (*a*) Plate, sheet, and strip shall be produced by hot-working, annealing, pickling, cold-working, reannealing, and polishing, or by any combination of these processes.

(*b*) Plate, sheet, and strip shall be produced to the condition (temper), finish, and dimensions specified.

Chemical Composition

5. The material shall conform to the following requirements as to chemical composition:[a]

Nickel,[b] min., per cent	72.0
Chromium, per cent	14.0 to 17.0
Iron, per cent	6.0 to 10.0
Manganese, max., per cent	1.0
Carbon, max., per cent	0.15
Copper, max., per cent	0.5
Silicon, max., per cent	0.5
Sulfur, max., per cent	0.015

[a] For the applicable rounding-off procedures, see Section 14(*b*).
[b] Cobalt counting as nickel.

Samples for Chemical Analysis

6. (*a*) Unless otherwise agreed upon by the manufacturer and the purchaser, heat (ladle) analyses furnished by the manufacturer shall be accepted as defining the composition of the material furnished.

(*b*) If samples for check analysis are desired, they shall be so specified by the purchaser, at the time of placement of the order. Samples shall be taken from material representative of each 5000 lb, or fraction thereof, of the finished material, and shall conform to the requirements of Section 5.

(*c*) Such samples for chemical analysis shall be taken in accordance with the procedure described in the Method of Sampling Wrought Non-Ferrous Metals and Alloys for Determination of Chemical Composition (ASTM Designation: E 55). The lot size, portion size and selection of pieces shall be as follows:

Lot Size.—5,000 lb, or fraction thereof, of finished material.

Portion Size.—Pieces from four individual lengths of finished material. If the lot consists of less than four lengths, a piece shall be taken from each individual length.

Minimum Weight of Composite Sample.—150 g divided into three equal parts, one for the manufacturer, one for the purchaser, and one for an umpire, if necessary.

(*d*) Samples for check analyses, when requested after the date of placement of the order, shall be as agreed upon between the manufacturer and the purchaser.

Lots for Mechanical Testing

7. Unless otherwise specified, a lot for mechanical testing shall be defined as follows:

Plate.—A lot of plate shall consist of the products resulting from the rolling of one heat of material in the same condition (temper) and specified thickness.

Sheet and Strip.—A lot of sheet or strip shall consist of material from one heat in the same form (sheet or strip), condition (temper), finish, and specified thickness but in no case more than 25,000 lb.

NOTE 5.—Where material cannot be identified by heat, a lot shall consist of not more than 500 lb of material in the same thickness and condition, except that for plates weighing over 500 lb only one specimen shall be taken.

Sampling for Mechanical Tests

8. (*a*) Samples of the material to provide test specimens for mechanical tests shall be taken from such locations in each lot as to be representative of that lot.

(*b*) When samples are to be taken after delivery, the purchaser of material ordered to cut lengths may arrange with the manufacturer to have an excess length furnished or request on the order additional material of adequate size to provide sample coupons for inspection purposes.

Mechanical Properties

9. The material shall conform to the requirements as to mechanical properties prescribed in Table I.

Hardness

10. Material tested in a single thickness shall conform to the Rockwell or equivalent hardness requirements prescribed in Tables I and II, as applicable, with the exception that hardness values in Table I are informative only for those conditions of plate, sheet and strip for which tensile requirements have been specified.

TABLE I.—MECHANICAL PROPERTIES[a] FOR PLATE, SHEET AND STRIP.
All thicknesses and sizes unless otherwise indicated.

Condition	Tensile Strength, min, psi	Yield Strength[b] (0.2 per cent offset), min, psi	Elongation in 2 in., min, per cent	Rockwell Hardness[c]
HOT-ROLLED PLATE				
Annealed	80 000	35 000	30	130 to 180[c]
As-rolled[d]	85 000	35 000	30	150 to 210[e]
HOT-ROLLED SHEET				
Annealed	80 000	35 000	30	B92, max
COLD-ROLLED SHEET				
Annealed[f]	80 000	35 000	30	B92, max
COLD-ROLLED STRIP[h]				
Annealed[f]	80 000[g]	35 000	30[g]	B88, max

[a] For applicable rounding-off procedures, see Section 14(*b*).
[b] Yield strength requirements do not apply to material under 0.020 in. in thickness. See Section 14 (*c*).
[c] Hardness values (Rockwell, Brinell or equivalent) are informative only and are not to be construed as the basis for acceptance or rejection for those conditions for which tensile requirements are specified. For other conditions hardness requirements are mandatory.
[d] As-rolled plate specified "suitable for hot forming" shall be furnished from heats of known good, hot-malleability characteristics (Appendix I, Section (*A2*)). There are no applicable tensile or hardness requirements for such material.
[e] Numbers shown are Brinell hardness values and are informative only. They are not to be construed as the basis for acceptance or rejection.
[f] For deep drawing and spinning quality, see Sections 10, 11 and Table II.
[g] Not applicable for thicknesses under 0.010 in.
[h] Accurate hardness determinations are difficult to make on strip under 0.005 in. in thickness and are not recommended (See Note 7).

NOTE 6.—For hardness conversions, see the Standard Hardness Conversion Tables for Metals (Relationship Between Diamond Pyramid Hardness, Brinell Hardness, and Rockwell Hardness) (ASTM Designation: E 140).

NOTE 7.—Caution should be observed in using the Rockwell test on thin material, as the results may be affected by the specimen thickness. For thicknesses under 0.050 in. the use of the Rockwell superficial or the Vickers hardness test is suggested. For thicknesses of 0.005 to 0.015 in., incl., the Vickers hardness test should be used.

Grain Size of Deep Drawing Quality and Spinning Quality Sheet and Strip (See Appendix 1.)

11. "Deep drawing quality" and "spinning quality" sheet and strip shall conform to the grain sizes as illustrated in Plate I of the Methods for Determining the Average Grain Size of Metals (ASTM Designation: E 112). The requirements shall be as indicated in Table II.

TABLE II.—GRAIN SIZE[a] AND HARDNESS[a] FOR COLD-ROLLED, DEEP-DRAWING AND SPINNING QUALITY SHEET AND STRIP.

Thickness, in.	Calculated Diameter of Average Grain Section, max		Corresponding ASTM Micro-Grain Size No.	Rockwell B[b] Hardness, max
	mm	in.		
SHEET (56 IN. WIDE AND UNDER)				
0.050 and less	0.075	0.0030	4.5	80
Over 0.050 to 0.250, incl.	0.110	0.0043	3.5	84
STRIP[c] (ALL WIDTHS)				
0.005[c] to 0.010, incl.	0.022	0.0009	8[d]	88[d]
Over 0010 to 0.024, incl.	0.075	0.0030	4.5	80
Over 0.024 to 0.125, incl.	0.075	0.0030	4.5	84

[a] See Section 14(b) for the applicable rounding-off procedure.
[b] For Rockwell or equivalent hardness conversions see ASTM Hardness Conversion Tables for Metals E 140.
[c] For ductility evaluations for strip under 0.005 in. in thickness the springback test such as described in the Method of Test for Temper of Strip and Sheet Metals for Electronic Devices (ASTM Designation: F 155) is often used and the manufacturer should be consulted.
[d] Accurate grain size and hardness determinations are difficult to make on strip under 0.005 in. in thickness and are not recommended (See Note 7).
[e] Grain size and hardness requirements other than those indicated above shall be agreed upon between the manufacturer and the purchaser.

Test Specimens

12. (*a*) Tension test specimens from material $\frac{3}{4}$ in. and under in thickness shall be of the full thickness of the material, and shall be machined to the form and dimensions shown in Fig. 7 of the Methods of Tension Testing of Metallic Materials (ASTM Designation: E 8).

(*b*) Tension test specimens from material over $\frac{3}{4}$ in. in thickness may be of the full thickness of the material, machined to the form and dimensions shown in Fig. 6 of Methods E 8, except that the elongation shall be measured for the 2-in. gage length that includes the fracture. In case of dispute the referee method shall be to prepare specimens by machining to the form and dimensions shown in Fig. 8 of Methods E 8.

(*c*) Tension test specimens from plate, sheet, and strip shall be taken transverse to the direction of rolling when width will permit.

Number of Tests

13. (*a*) *Tension Tests.*—Unless otherwise specified, one tension test shall be made on each lot of material as defined in Section 7.

(*b*) *Hardness Tests.*—Unless otherwise specified, hardness tests need not be made where hardness requirements are designated to be "for information only." Unless otherwise specified, where hardness values are shown as "mandatory" requirements, at least two, and not more than six, hardness readings shall be made on individual specimens in any lot, as defined in Section 7.

(*c*) *Grain Size.*—Unless otherwise specified, grain size tests shall be made only on "deep-drawing" and "spinning quality" sheet and strip. In such cases, one grain size test shall be made on each lot of material as defined in Section 7.

Methods of Test and Chemical Analysis

14. (*a*) The chemical composition and mechanical properties of the material as enumerated in this specification shall be determined, in case of disagreement, in accordance with the following methods of the American Society for Testing Materials:

Test	ASTM Designation[a]
Chemical Analysis	E 38
Tension	E 8
Brinell Hardness	E 10
Rockwell Hardness	E 18
Hardness Conversion	E 140
Grain Size	E 112
Rounding-off Procedure	E 29
Method of Sampling	E 55
Spring-back	F 155

[a] These designations refer to the following methods of testing:
E 38, Methods for Chemical Analysis of Nickel-Chromium and Nickel-Chromium-Iron Alloys.
E 8, Methods of Tension Testing of Metallic Materials,
E 10, Method of Test for Brinell Hardness of Metallic Materials,
E 18, Methods of Test for Rockwell Hardness and Rockwell Superficial Hardness of Metallic Materials,
E 140, Hardness Conversion Tables for Metals (Relationship Between Diamond Pyramid Hardness, Brinell Hardness, and Rockwell Hardness),
E 112, Methods for Estimating the Average Grain Size of Metals,
E 29, Recommended Practices for Designating Significant Places in Specified Limiting Values,
E 55, Method of Sampling Wrought Non-Ferrous Metals and Alloys for Determination of Chemical Composition, and
F 155, Method of Test for Temper of Strip and Sheet Metals for Electronic Devices.

(*b*) For purposes of determining compliance with the specified limits for requirements of the properties listed in the following table, an observed value or a calculated value shall be rounded off as indicated below, in accordance with the rounding-off method of the Recommended Practices for Designating Significant Places in Specified Limiting Values (ASTM Designation: E 29).

Test	Rounded-off Unit for Observed or Calculated Value
Chemical composition, hardness, and tolerances (when expressed in decimals)	nearest unit in the last right-hand place of figures of the specified limit.
Tensile strength, yield strength	nearest 1000 psi.
Elongation	nearest 1 per cent
Grain size: 0.060 mm (0.0024 in.) or larger	nearest multiple of 0.005 mm (0.0002 in.)
less than 0.060 mm (0.0024 in.)	nearest multiple of 0.002 mm (0.0001 in.)

(*c*) In lieu of the offset method, the minimum yield strength may be determined as the stress required to prcduce the elongation under load as calculated by the following formula:

$$X = \left(\frac{Y}{Z} + 0.002\right) \times \text{gage length in inches}$$

where:
X = limiting extension under load in inches,
Y = specified yield strength at 0.2 per cent offset, from Table I, and
Z = modulus of elasticity (31,000,000 psi).

In case of dispute the offset method shall be used as the referee procedure.

(*d*) The measurement of grain size may be carried out by the planimetric method, the comparison method or the intercept method described in Methods E 112, However, in case of disagreement the "referee" method for determining grain size shall be the planimetric method.

Permissible Variations in Thickness and Weight

15. (*a*) The material covered by this specification shall be assumed to weigh 0.304 lb per cu in.

(*b*) *Plate.*—For plates up to 2 in., incl, in thickness the permissible variation under the specified thickness and permissible excess in overweight shall not exceed the amounts prescribed in Table III. For plates over 2 in. in thickness the permissible variations over the specified thickness shall not exceed the amounts prescribed in Table IV.

(*c*) *Sheet and Strip.*—The permissible variations in thickness of sheet and strip shall be as prescribed in Table V. The thickness of strip and sheet shall be measured with the micrometer spindle $\frac{3}{8}$ in. or more from any edge for material 1 in. or over in width and at any place on strip under 1 in. in width.

TABLE III.—PERMISSIBLE VARIATIONS IN THICKNESS AND OVERWEIGHT OF RECTANGULAR PLATES.

NOTE.—All plates shall be ordered to thickness and not to weight per square foot. No plates shall vary more than 0.01 in. under the thickness ordered, and the overweight of each lot[a] in each shipment shall not exceed the amount given in the table. Spot grinding is permitted to remove surface imperfections, such spots not to exceed 0.01 in. under the specified thickness.

Specified Thickness, in.	Permissible Excess in Average Weight[b,c] per Square Foot of Plates for Widths Given in Inches Expressed in Percentage of Nominal Weights									
	Under 48	48 to 60, excl	60 to 72, excl	72 to 84, excl	84 to 96, excl	96 to 108, excl	108 to 120, excl	120 to 132, excl	132 to 144, excl	144 to 160, incl
$\frac{3}{16}$ to $\frac{5}{16}$, excl	9.0	10.5	12.0	13.5	15.0	16.5	18.0	....	....	....
$\frac{5}{16}$ to $\frac{7}{8}$, excl	7.5	9.0	10.5	12.0	13.5	15.0	16.5	18.0	....	....
$\frac{7}{8}$ to $\frac{7}{16}$, excl	7.0	7.5	9.0	10.5	12.0	13.5	15.0	16.5	18.0	19.5
$\frac{7}{16}$ to $\frac{1}{2}$, excl	6.0	7.0	7.5	9.0	10.5	12.0	13.5	15.0	16.5	18.0
$\frac{1}{2}$ to $\frac{5}{8}$, excl	5.0	6.0	7.0	7.5	9.0	10.5	12.0	13.5	15.0	16.5
$\frac{5}{8}$ to $\frac{3}{4}$, excl	4.5	5.5	6.0	7.0	7.5	9.0	10.5	12.0	13.5	15.0
$\frac{3}{4}$ to 1, excl	4.0	4.5	5.5	6.0	7.0	7.5	9.0	10.5	12.0	13.5
1, to 2, incl	4.0	4.0	4.5	5.5	6.0	7.0	7.5	9.0	10.5	12.0

[a] The term "lot" applied to the above table means all of the plates of each group width and each group thickness.
[b] The permissible overweight for lots of circular and sketch plates shall be 25 per cent greater than the amounts given in the above table.
[c] The weight of individual plates shall not exceed the nominal weight by more than 1¼ times the amount given in the table and footnote *b*.

TABLE IV.—PERMISSIBLE VARIATIONS IN THICKNESS FOR RECTANGULAR PLATES OVER 2 IN. IN THICKNESS.

Specified Thickness, in.	Permissible Variations, in., over Specified Thickness for Widths Given, in.					
	To 36, excl	36 to 60, excl	60 to 84, excl	84 to 120, excl	120 to 132, excl	132 and over
Over 2 to 3, excl	$\frac{1}{16}$	$\frac{3}{32}$	$\frac{7}{64}$	$\frac{1}{8}$	$\frac{1}{8}$	$\frac{9}{64}$
3 to 4, incl	$\frac{5}{64}$	$\frac{3}{32}$	$\frac{7}{64}$	$\frac{1}{8}$	$\frac{1}{8}$	$\frac{9}{64}$

NOTE—Permissible variation under specified thickness, 0.01 in.

Permissible Variations in Width or Diameter

16. (*a*) *Plate.*—The permissible variations in width of rectangular plates and diameter of circular plates shall be as prescribed in Tables VI and VII.

(*b*) *Sheet and Strip.*—The permissible variations in width for sheet and strip shall be as prescribed in Table VIII.

Permissible Variations in Length

17. (*a*) Sheet and strip of all sizes may be ordered to cut lengths, in which case a variation of $\frac{1}{8}$ in. over the specified length shall be permitted.

(*b*) Permissible variations in the length of rectangular plate shall be as prescribed in Table IX.

Straightness

18. (*a*) The edgewise curvature (depth of chord) of flat sheet, strip and plate shall not exceed 0.05 in. multiplied by the length in feet.

(*b*) Straightness for coiled strip material is subject to agreement between the manufacturer and the purchaser.

Edges

19. (*a*) When finished edges of strip are specified in the contract or order, the following descriptions shall apply:

Square-Edge Strip shall be supplied with finished edges, with sharp, square corners, without bevel or rounding.

Round-Edge Strip shall be supplied with finished edges, semi-circular in form, the diameter of the circle forming the edge being equal to the strip thickness.

(*b*) When no description of any required form of strip edge is given, it

TABLE V.—PERMISSIBLE VARIATIONS IN THICKNESS OF SHEET AND STRIP.

Specified Thickness, in.	Permissible Variations in Thickness, in., for Widths Given in Inches			
Sheet				
	Hot-Rolled		Cold-Rolled	
	48 and Under	Over 48 to 60, incl	48 and Under	Over 48 to 60, incl
	Plus and Minus[a]	Plus and Minus[a]	Plus and Minus[a]	Plus and Minus[a]
0.018 to 0.025, incl.	0.003	0.004	0.002	0.003
Over 0.025 to 0.034, incl.	0.004	0.005	0.003	0.004
Over 0.034 to 0.043, incl.	0.005	0.006	0.004	0.005
Over 0.043 to 0.056, incl.	0.005	0.006	0.004	0.005
Over 0.056 to 0.070, incl.	0.006	0.007	0.005	0.006
Over 0.070 to 0.078, incl.	0.007	0.008	0.006	0.007
Over 0.078 to 0.093, incl.	0.008	0.009	0.007	0.008
Over 0.093 to 0.109, incl.	0.009	0.010	0.007	0.009
Over 0.109 to 0.125, incl.	0.010	0.012	0.008	0.010
Over 0.125 to 0.140, incl.	0.012	0.014	0.008	0.010
Over 0.140 to 0.171, incl.	0.014	0.016	0.009	0.012
Over 0.171 to 0.187, incl.	0.015	0.017	0.010	0.013
Over 0.187 to 0.218, incl.	0.017	0.019	0.011	0.015
Over 0.218 to 0.234, incl.	0.018	0.020	0.012	0.016
Over 0.234 to 0.250, incl.	0.020	0.022	0.013	0.018

	All Widths
Cold-Rolled Strip	
	Plus and Minus[a]
Under 0.006	10[b]
0.006 to 0.015, incl.	0.001
Over 0.015 to 0.050, incl.	0.0015
Over 0.050 to 0.093, incl.	0.0025
Over 0.093 to 0.125, incl.	0.004

[a] Measured $\frac{3}{8}$ in. or more from any edge except for strip under 1 in. in width which is measured at any place.
[b] Expressed as per cent of nominal thickness.

TABLE VI.—PERMISSIBLE VARIATIONS IN WIDTH[a] OF SHEARED AND ABRASIVE CUT RECTANGULAR PLATE.[b]

Specified Thickness, in.	Permissible Variations in Widths for Given, in.									
	Up to 30 incl		Over 30 to 72, incl		Over 72 to 108, incl		Over 108 to 144, incl		Over 144 to 160, incl	
	Plus	Minus	Plus	Minus	Plus	Minus	Plus	Minus	Plus	Minus
Sheared:[c]										
$\frac{3}{16}$ to $\frac{5}{16}$, excl.	$\frac{3}{16}$	$\frac{1}{8}$	$\frac{1}{4}$	$\frac{1}{8}$	$\frac{3}{8}$	$\frac{1}{8}$	$\frac{1}{2}$	$\frac{1}{8}$	...	...
$\frac{5}{16}$ to $\frac{1}{2}$, excl.	$\frac{1}{4}$	$\frac{1}{8}$	$\frac{3}{8}$	$\frac{1}{8}$	$\frac{3}{8}$	$\frac{1}{8}$	$\frac{1}{2}$	$\frac{1}{8}$	$\frac{5}{8}$	$\frac{1}{8}$
$\frac{1}{2}$ to $\frac{3}{4}$, excl.	$\frac{3}{8}$	$\frac{1}{8}$	$\frac{3}{8}$	$\frac{1}{8}$	$\frac{1}{2}$	$\frac{1}{8}$	$\frac{3}{8}$	$\frac{1}{8}$	$\frac{3}{4}$	$\frac{1}{8}$
$\frac{3}{4}$ to 1, excl.	$\frac{1}{2}$	$\frac{1}{8}$	$\frac{1}{2}$	$\frac{1}{8}$	$\frac{5}{8}$	$\frac{1}{8}$	$\frac{3}{4}$	$\frac{1}{8}$	$\frac{7}{8}$	$\frac{1}{8}$
1 to 1¼, incl.	$\frac{5}{8}$	$\frac{1}{8}$	$\frac{5}{8}$	$\frac{1}{8}$	$\frac{3}{4}$	$\frac{1}{8}$	$\frac{7}{8}$	$\frac{1}{8}$	1	$\frac{1}{8}$
Abrasive cut:[d,e]										
$\frac{3}{16}$ to 1½, incl.	$\frac{1}{16}$	$\frac{1}{16}$	$\frac{1}{16}$	$\frac{1}{16}$	$\frac{1}{16}$	$\frac{1}{16}$	$\frac{1}{16}$	$\frac{1}{16}$	$\frac{1}{16}$	$\frac{1}{16}$
Over 1½ to 4, incl.	$\frac{1}{8}$	$\frac{1}{8}$	$\frac{1}{8}$	$\frac{1}{8}$	$\frac{1}{8}$	$\frac{1}{8}$	$\frac{1}{8}$	$\frac{1}{8}$	$\frac{1}{8}$	$\frac{1}{8}$

[a] Permissible variations in width for powder or inert arc cut plate shall be as agreed upon between the manufacturer and the purchaser.
[b] Permissible variations in machined, powder or inert arc cut circular plate shall be as agreed upon between the manufacturer and the purchaser.
[c] The minimum sheared width is 10 in. for material ¾ in. and under in thickness and 20 in. for material over ¾ in. in thickness.
[d] The minimum abrasive cut width is 2 in. and increases to 4 in. for thicker plates.
[e] These tolerances are applicable to lengths of 240 in., max. For lengths over 240 in. an additional $\frac{1}{16}$ in. is permitted, both plus and minus.

shall be understood that edges such as would result from slitting or shearing will be acceptable.

(*c*) Sheet shall have sheared edges.

(*d*) Plate shall have sheared or cut (machined, abrasive cut, powder cut or inert arc cut) edges, as specified.

Squareness (Sheet)

20. For sheets of all thicknesses, the angle between adjacent sides shall be 90 ± 0.15 deg ($\frac{1}{16}$ in. in 24 in.).

Flatness

21. (*a*) There shall be no flatness requirements for "deep drawing quality," "spinning quality" and "tempered" sheet and strip (see Appendix I, Sections (*C*) and (*D*), as applicable).

(*b*) Standard flatness tolerances for plate shall conform to the requirements of Table X. "Specially-flattened" plate,

TABLE VII.—PERMISSIBLE VARIATIONS IN DIAMETER FOR SHEARED CIRCULAR PLATES.

Specified Diameter, in.	Permissible Variations Over Specified Diameter for Thickness Given, in.[a]
	To ⅜, incl
20 to 32, excl.	¼
32 to 84, excl.	$\frac{5}{16}$
84 to 108, excl.	⅜
108 to 140, incl.	$\frac{7}{16}$

[a] No permissible variations under.

when so specified, shall have permissible variations in flatness as agreed upon between the manufacturer and the purchaser.

Special Requirements

22. (*a*) Special tolerances other than those specified herein shall be as agreed upon by the manufacturer and the purchaser.

(*b*) Special analyses, test procedures, mechanical properties, and quality requirements not covered by this specification shall be as agreed upon by the manufacturer and the purchaser.

(*c*) When material is intended for nuclear applications and other critical end uses, the manufacturer shall be notified at the time of placement of the inquiry or order to determine if material

of quality and inspection procedures normally employed for commercial material to this specification are adequate. In the event that more critical quality or more rigid inspection standards are indicated, the manufacturer and the purchaser shall agree upon such standards prior to production.

Workmanship and Finish

23. The material shall be uniform in quality and temper, smooth, commercially straight or flat, and free from injurious defects.

Marking

24. Unless otherwise specified, each bundle or shipping container shall be marked with the name of the material, this specification number, the size, gross, tare and net weight, consignor and consignee address, contract or order number, or such other information as may be defined in the contract or order.

Certification and Inspection

25. (*a*) Unless otherwise agreed upon between the manufacturer and purchaser, certification shall be based on one of the options described in Paragraphs (*b*) and (*c*). The option desired shall be specified on the individual purchase order (Section 2 (*g*)). In the event that neither of the above options is specified, the basis for acceptance or rejection shall be based on the provisions described in Paragraph (*b*).

(*b*) *Certificate of Compliance.*—The Certificate of Compliance shall consist of the results of the chemical (ladle) analyses of each heat in the shipment and a statement to the effect that material complies with requirements of the specification, based on available production data. No mechanical properties will be furnished on such certificates.

NOTE 8.—In the event results of both chemical analyses and mechanical property tests are desired see Section 25(*c*).

(*c*) *Test Reports.*—Test Reports shall consist of a statement to the effect that material complies with the requirements of the specification and the manufacturer shall also include in the Test Report the results of chemical (ladle) analyses of each heat and the results of mechanical property tests for each lot of materials furnished.

NOTE 9.—Where material is intended for ASME Boiler and Pressure Vessel Code or other code requirements, it shall be the responsibility of the purchaser to determine whether a Certificate of Compliance (Section 25(*b*)) will be acceptable to the responsible inspector or code authority or whether, in such instances a Test Report (Section 25(*c*)) will be required.

(*d*) *Samples for Check Analysis.*—When, in addition to the above options on certification, the purchaser desires to make check analyses, sufficient additional material shall be ordered to provide samples for such check analyses. Analyses shall be made in the purchaser's laboratory or elsewhere at the expense of the purchaser.

(*e*) *Purchaser's Inspection at Place of Manufacture.*—When specified on the purchase order, inspection by the purchaser's representative may be made at the place of manufacture prior to shipment. In such cases, the purchaser or his representative shall state which tests he desires to witness. The manufacturer shall give the purchaser ample notice in writing as to when tests shall be conducted so that the purchaser's representative may witness any tests (excluding check analyses) that he may

TABLE VIII.—PERMISSIBLE VARIATIONS IN WIDTH OF SHEET AND STRIP.

Specified Thickness, in.	Specified Width, in.	Permissible Variations in specified width, in.	
		Plus	Minus
Sheet			
0.187 and under	2 and over	0.125	0
Over 0.187 to 0.250, incl.	6 and over	0.125	0
Strip (Slit Edges)			
Slit edge:[a]			
0.009 and under	All widths	0.005	0.005
Over 0.009 to 0.024, incl.	All widths	0.007	0.007
Over 0.024 to 0.075, incl.	14 and under	0.007	0.007
Over 0.075 to 0.100, incl.	14 and under	0.009	0.009
Over 0.100 to 0.125, incl.	14 and under	0.012	0.012

[a] Rolled round or square edge strip in thicknesses of 0.071 to 0.125 in., incl., in widths 3 in. and under, shall have permissible variations of ±0.005 in. Permissible variations for other sizes shall be as agreed upon between the manufacturer and the purchaser.

TABLE IX.—PERMISSIBLE VARIATIONS IN LENGTH[a] OF SHEARED AND ABRASIVE CUT[b] RECTANGULAR PLATE.[c]

Specified Thickness, in.	Permissible Variation in Length for Lengths Given, in.															
	Up to 60, incl		Over 60 to 96, incl		Over 96 to 120, incl		Over 120 to 240, incl		Over 240 to 360, incl		Over 360 to 480, incl		Over 480 to 540, incl		Over 540	
	Plus	Minus	Plus	Minus	Plus	Minus	Plus	Minus	Plus	Minus	Plus	Minus	Plus	Minus	Plus	Minus
Sheared:[d]																
$\frac{3}{16}$ to $\frac{5}{16}$, excl.	$\frac{3}{16}$	$\frac{1}{8}$	$\frac{1}{4}$	$\frac{1}{8}$	$\frac{3}{8}$	$\frac{1}{8}$	$\frac{1}{2}$	$\frac{1}{8}$	$\frac{5}{8}$	$\frac{1}{8}$	$\frac{3}{4}$	$\frac{1}{8}$	$\frac{7}{8}$	$\frac{1}{8}$	...	...
$\frac{5}{16}$ to $\frac{1}{2}$, excl.	$\frac{1}{4}$	$\frac{1}{8}$	$\frac{1}{2}$	$\frac{1}{8}$	$\frac{1}{2}$	$\frac{1}{8}$	$\frac{1}{2}$	$\frac{1}{8}$	$\frac{5}{8}$	$\frac{1}{8}$	$\frac{3}{4}$	$\frac{1}{8}$	$\frac{7}{8}$	$\frac{1}{8}$	1	$\frac{1}{8}$
$\frac{1}{2}$ to $\frac{3}{4}$, excl.	$\frac{1}{2}$	$\frac{1}{8}$	$\frac{1}{2}$	$\frac{1}{8}$	$\frac{5}{8}$	$\frac{1}{8}$	$\frac{5}{8}$	$\frac{1}{8}$	$\frac{3}{4}$	$\frac{1}{8}$	$\frac{7}{8}$	$\frac{1}{8}$	1	$\frac{1}{8}$	1⅛	$\frac{1}{8}$
$\frac{3}{4}$ to 1, excl.	$\frac{5}{8}$	$\frac{1}{8}$	$\frac{5}{8}$	$\frac{1}{8}$	$\frac{3}{4}$	$\frac{1}{8}$	$\frac{3}{4}$	$\frac{1}{8}$	$\frac{7}{8}$	$\frac{1}{8}$	1	$\frac{1}{8}$	1⅛	$\frac{1}{8}$	1⅛	$\frac{1}{8}$
1 to 1¼, incl.	$\frac{3}{4}$	$\frac{1}{8}$	$\frac{3}{4}$	$\frac{1}{8}$	$\frac{3}{4}$	$\frac{1}{8}$	$\frac{7}{8}$	$\frac{1}{8}$	1⅛	$\frac{1}{8}$	1⅛	$\frac{1}{8}$	1⅛	$\frac{1}{8}$	...	...
Abrasive cut:[b]																
$\frac{3}{16}$ to 1½, incl.	$\frac{1}{16}$	$\frac{1}{16}$	$\frac{1}{16}$	$\frac{1}{16}$	$\frac{1}{16}$	$\frac{1}{16}$	$\frac{1}{16}$	$\frac{1}{16}$	$\frac{1}{16}$	$\frac{1}{16}$	$\frac{1}{16}$	$\frac{1}{16}$	...	...	...	...
Over 1½ to 4, incl.	$\frac{1}{8}$	$\frac{1}{8}$	$\frac{1}{8}$	$\frac{1}{8}$	$\frac{1}{8}$	$\frac{1}{8}$	$\frac{1}{8}$	$\frac{1}{8}$	$\frac{1}{8}$	$\frac{1}{8}$	$\frac{1}{8}$	$\frac{1}{8}$	...	...	...	...

[a] Permissible variations in length for powder or inert arc cut plate shall be as agreed upon between the manufacturer and the purchaser.
[b] Abrasive cut applicable to a maximum length of 144 or 400 in. depending on the thickness and width ordered.
[c] Permissible variations in machined, powder or inert arc cut circular plate shall be as agreed upon between the manufacturer and the purchaser.
[d] The minimum sheared length is 10 in.

TABLE X.—PERMISSIBLE VARIATIONS FROM FLATNESS OF RECTANGULAR, CIRCULAR AND SKETCH PLATES.

Specified Thickness, in.	Permissible Variations from a Flat Surface for Thickness and Widths Given, in.								
	To 48, excl.	48 to 60, excl	60 to 72, excl	72 to 84, excl	84 to 96, excl	96 to 108, excl	108 to 120, excl	120 to 144, excl	144 and over
3/16 to 1/4, excl	3/4	11/16	1 1/4	1 3/8	1 5/8	1 5/8	...	...	...
1/4 to 3/8, excl	11/16	3/4	15/16	1 1/8	1 3/8	1 7/16	1 9/16	1 7/8	...
3/8 to 1/2, excl	1/2	9/16	11/16	3/4	15/16	1 1/8	1 1/4	1 7/16	1 3/4
1/2 to 3/4, excl	1/2	9/16	5/8	5/8	15/16	1 1/8	1 1/8	1 1/8	1 3/8
3/4 to 1, excl	1/2	9/16	5/8	5/8	3/4	15/16	15/16	1	1 1/8
1 to 2, excl	1/2	9/16	9/16	9/16	11/16	11/16	11/16	3/4	1
2 to 4, incl	1/2	9/16	5/8	11/16	1/2	9/16	5/8	3/4	7/8

NOTE 1.—Permissible variations apply to plates up to 12 ft in length, or to any 12 ft of longer plates.

NOTE 2.—If the longer dimension is under 36 in. the permissible variation is not greater than 1/4 in.

NOTE 3.—The shorter dimension specified is considered the width, and the permissible variation in flatness across the width does not exceed the tabular amount for that dimension.

NOTE 4.—The maximum deviation from a flat surface does not customarily exceed the tabular tolerance for the longer dimension specified.

desire. Unless otherwise agreed upon, if the purchaser's representative does not present himself at the manufacturer's plant within 14 days after the notified date set for testing, the manufacturer shall consider mill inspection as having been waived, shall proceed with his own testing, and shall furnish the purchaser with a Certificate of Compliance or a Test Report (Section 25 (*b*) and (*c*), whichever has been agreed upon between the inspector and the manufacturer.

The manufacturer shall afford the inspector representing the purchaser all reasonable facilities to satisfy him that the material is being furnished in accordance with this specification. Where such plant inspection may involve unusual handling, such as unpacking and repacking, retesting and reinspection and other unusual operations resulting in undue loss of time and production, the manufacturer shall so notify the purchaser.

Rejection

26. Material not conforming to this specification or to authorized modifications thereof shall be subject to rejection.

Rehearing

27. Samples tested in accordance with this specification that represent rejected material shall be preserved for not less than three weeks from the date of the test report. In case of dissatisfaction with the results of the tests, the manufacturer may make claim for a rehearing within that time.

APPENDIX I

The various conditions (tempers) and finishes in which plate, sheet and strip are procurable are as indicated below. These are subject to change and the manufacturer should be consulted for the latest information available.

(A) Plate, Hot-Rolled:

(A1) Annealed Plate.—Hot rolled and annealed with an oxide surface, and suitable for heavy cold forming. Available with a descaled surface, when so specified.

(A2) As-Rolled Plate.—As rolled with an oxide surface. Available with a descaled surface, when so specified. Suitable for flat work, mild forming or tube sheets. When intended for tube sheets specify plates to be "specially-flattened." When intended for hot forming, this should be indicated on the purchase order so that the manufacturer may select material known to have good hot-malleability characteristics.

(B) Sheet, Hot-Rolled:

(B1) Annealed and Pickled Sheet.—Hot rolled and annealed with a pickled matte finish. Properties similar to (*C1*) but with broader thickness tolerances. Not suggested for applications where the finish of a cold-rolled sheet is considered essential, or for deep drawing or spinning.

(C) Sheet, Cold-Rolled:

(C1) Annealed Sheet.—Cold rolled, annealed and leveled, with pickled finish. A general purpose sheet.

(C2) Spinning Quality Sheet.—Similar to (*C1*), furnished to slightly lower hardness and to controlled grain size, with leveling omitted, with pickled finish.

(C3) Deep Drawing Quality Sheet.—Similar to (*C2*), lightly leveled to meet drawability requirements, with dull or matte finish. Tested for drawing characteristics.

(D) Strip, Cold-Rolled:

(D1) Annealed Strip.—Cold rolled, annealed and leveled or coiled, with a bright finish.

(D2) Spinning Quality Strip.—Similar to (*D1*), except annealed to controlled grain size and hardness.

(D3) Deep Drawing Quality Strip.—Similar to (*D2*). Tested for drawing characteristics.

APPENDIX II

PREFERRED THICKNESS FOR WROUGHT NICKEL AND NICKEL-BASE ALLOY SHEET (0.250 IN. AND UNDER) AND STRIP (0.125 IN. AND UNDER.)

It is recommended that wherever possible material purchased to this specification be ordered in thicknesses listed as follows:

All values in inches

0.004	0.010	0.020	0.040	0.080	0.160
0.005	0.011	0.022	0.045	0.090	0.180
0.006	0.012	0.025	0.050	0.100	0.200
0.007	0.014	0.028	0.056	0.112	0.224
0.008	0.016	0.032	0.063	0.125	0.250
0.009	0.018	0.036	0.071	0.140	

SPECIFICATION FOR ALUMINUM BRONZE PLATE, SHEET, STRIP, AND ROLLED BAR

SB-169

(IDENTICAL WITH ASTM SPECIFICATION B 169-55 EXCEPT THAT ALLOYS A AND C HAVE BEEN DELETED)

Scope

1. (*a*) This specification covers aluminum bronze plate, sheet, strip, and rolled bar commonly used for drawing, forming, stamping, and bending.

One alloy designated D, is specified as shown in Table I.

(*b*) It should be understood that this specification is general. Since the material is used for many purposes where the requirements of the operation used are too particular to be specified by any of the ordinary physical tests, it is frequently advisable to submit samples or drawings to the manufacturer and secure an adjustment of anneal or temper to suit the actual operations to which the material is to be subjected.

General Requirements

2. Material furnished under this specification shall conform to the applicable requirements of the current edition of the Tentative Specification for General Requirements for Wrought Copper and Copper-Alloy Plate, Sheet, Strip, and Rolled Bar (ASTM Designation: B 248).

TABLE I.—CHEMICAL REQUIREMENTS.

	Alloy D
Copper, per cent	88.0 to 92.5
Aluminum, per cent	6.0 to 8.0
Iron, per cent	1.5 to 3.5
Copper plus aluminum plus iron, min, per cent	99.5

Basis of Purchase

3. Orders for material under this specification shall include the following information:

(*1*) Alloy (Section 4),
(*2*) Temper (Section 5),
(*3*) Dimensions: thickness and width (Section 7(*b*) and (*c*)),
(*4*) How furnished: flat or rolls,
(*5*) Length (Section 7(*d*)), and
(*6*) Weight: total for each size.

TABLE II.—TENSILE REQUIREMENTS.

Alloy	Temper	Thickness, in.	Width, in.	Tensile Strength, min, psi	Yield Strength,[a] min, psi	Elongation in 2 in., min, per cent
D	Soft	1/8 and under	All widths	75 000	42 000	30
		Over 1/8 to 5/16	All widths	72 000	38 000	32
		Over 5/16 to 1/2	All widths	72 000	32 000	35
		Over 1/2	All widths	70 000	30 000	40
	Hard	1/8 and under	All widths	85 000	55 000	30
		Over 1/8 to 5/16	All widths	80 000	50 000	30
		Over 5/16 to 1/2	All widths	75 000	45 000	35
		Over 1/2	All widths	70 000	40 000	40

[a] The yield strength shall be determined as the stress producing an elongation of 0.5 per cent under load, that is, 0.01 in. in a gage length of 2 in.

Chemical Composition

4. The material shall conform to the requirements as to chemical composition prescribed in Table I.

Tensile Properties

5. The material shall conform to the requirements as to tensile properties prescribed in Table II. Tension test specimens shall be taken so that the longitudinal axis of such specimens is parallel to the direction of rolling.

Bending Properties

6. The bend test specimen shall stand being bent cold through 120 deg to a radius equal to its thickness, without fracturing.

Dimensions and Tolerances

7. (*a*) The dimensions and tolerances for material covered by this specification shall be as prescribed in the current edition of ASTM Specification B 248, with particular reference to Section 8 and the following tables of that specification:

(b) Thickness.—See Section 8(*b*), Table II.

(c) Width:

(*1*) *Slit Metal and Slit Metal with Rolled Edges*—See Section 8(*c*), Table IV.

(*2*) *Square-Sheared Metal.*—See Section 8(*c*), Table V.

(*3*) *Sawed Metal.*—See Section 8(*c*), Table VI.

(d) Length:

(*1*) *Specific and Stock Lengths with and without Ends.*—See Section 8(*d*), Table VII.

(*2*) *Schedule of Lengths (Specific and Stock) with Ends.*—See Section 8(*d*), Table VIII.

(3) *Length Tolerances for Square-Sheared Metal.*—See Section 8(*d*), Table XIV.

(4) *Length Tolerances for Sawed Metal.*—See Section 8(*d*), Table XV.

(*e*) *Straightness:*

(1) *Slit Metal.*—See Section 8(*e*), Table IX.

(2) *Edge-Rolled Metal.*—See Section 8(*e*), Table X.

(3) *Square-Sheared Metal.*—See Section 8(*e*), Table XI.

(4) *Sawed Metal.*—See Section 8(*e*), Table XII.

SPECIFICATION FOR COPPER-ALLOY CONDENSER TUBE PLATES

SB-171

(IDENTICAL WITH ASTM SPECIFICATION B 171-58)

Scope

1. This specification covers rolled plates of seven copper alloys, for use as tube plates in surface condensers and heat exchangers.

Basis of Purchase

2. Orders for material under this specification shall include the following information:

(1) Name of alloy (Section 4, Table I),

(2) Whether plate is to be machined (Section 10 (*c*)),

(3) How tolerance is specified (Footnote *b*, Table III),

(4) Special marking, if required (Section 13), and

(5) Weight: total for each size.

Manufacture

3. The material shall be of such quality and purity that the finished product shall have the properties and characteristics prescribed in this specification.

Chemical Composition

4. The plates shall conform to the requirements as to chemical composition prescribed in Table I.

Sampling for Chemical Analysis

5. Samples for chemical analysis shall be taken in accordance with the Standard Method of Sampling Wrought Non-Ferrous Metals and Alloys for Determination of Chemical Composition (A.S.T.M. Designation: E 55). The lot size, portion size, and selection of pieces shall be as follows:

Lot Size:

Plates 1.75 in. or Under in Thickness.—A lot shall consist of not more than 5000 lb or the weight of a single plate in excess of this amount.

Plates Over 1.75 in. in Thickness.—A lot shall consist of not more than 10,000 lb or the weight of a single plate in excess of this amount.

Portion Size.—Pieces from four individual lengths of finished product. If the lot consists of less than the number of lengths indicated in the portion size, a piece shall be taken from each individual length.

Minimum Weight of Composite Sample.—150 g. divided into three equal parts.

Tensile Properties

6. The plates shall conform to the requirements as to tensile properties prescribed in Table II.

Methods of Test and Chemical Analysis

7. The properties and chemical compositions enumerated in this specification shall, in case of disagreement, be determined in accordance with the following methods of the American Society for Testing Materials:

Test	A.S.T.M. Designation[a]
Chemical Analysis	E 36, E 54, E 75
Tension	E 8[b]

[a] These designations refer to the following methods of testing
Standard Methods of Chemical Analysis of Brasses (A.S.T.M. Designation: E 36),
Standard Methods for Chemical Analysis of Special Brasses and Bronzes (A.S.T.M. Designation: E 54),
Tentative Methods of Chemical Analysis of Copper-Nickel and Copper-Nickel-Zinc Alloys (A.S.T.M. Designation: E 75) and
Tentative Methods of Tension Testing of Metallic Materials (A.S.T.M. Designation: E 8).

[b] The tension test specimen shall conform to the dimensions shown in Fig. 7 or 8 of Methods E 8.

Significance of Numerical Limits

8. For purposes of determining compliance with the specified limits for requirements of the properties listed in the following table, an observed value or a calculated value shall be rounded off as indicated in accordance with the rounding-off method of the Recommended Practices for Designating Significant Places in Specified Limiting Values (A.S.T.M. Designation: E 29):

Property	Rounded-Off Unit for Observed or Calculated Value
Chemical Composition	Nearest unit in the last right-hand place of figures
Tensile Strength, Yield Strength	Nearest 1000 psi.
Elongation: 5 per cent and over	Nearest 1 per cent

TABLE I.—CHEMICAL REQUIREMENTS.

	Leaded Muntz Metal[a]	Naval Brass[a]	Admiralty Metal[a]	70-30 Copper-Nickel Alloy	90-10 Copper-Nickel Alloy	Aluminum Bronze	
						Alloy D	Alloy E
Copper, per cent	58.0 to 61.0	59.0 to 62.0	70.0 to 73.0	65.0 min.[b]	86.5 min.[b]	88.0 to 92.5[b]	78.0 to 85.0[b]
Tin, per cent	0.25 max.	0.5 to 1.0	0.8 to 1.2	.....	.....	.....	.....
Nickel, per cent	.....	.....	.....	29.0 to 33.0	9.0 to 11.0	.....	4.0 to 7.0
Manganese, per cent	.....	.....	.....	1.0 max	1.0 max.	.....	0.5 to 2.0
Lead, per cent	0.4 to 0.9	0.20 max.	0.07 max.	0.05 max.	0.05 max.	.....	.....
Iron, per cent	0.15 max.	0.10 max.	0.06 max.	0.70 max.	0.5 to 2.0	1.5 to 3.5	1.5 to 3.5
Other impurities, per cent	0.10 max.	0.10 max.	0.10 max.	.....	.....	.....	.....
Zinc, per cent	remainder	remainder	remainder	1.0 max.	1.0 max.	.....	.....
Aluminum, per cent	.....	.....	.....	.....	.....	6.0 to 8.0	8.0 to 11.0

[a] In leaded Muntz metal, naval brass, and admiralty metal it shall be permissible to add arsenic or antimony or phosphorus up to 0.10 per cent.

[b] Copper plus sum of named elements shall be 99.5 per cent, minimum.

Number of Tests

9. One tension test shall be made for each 5000 lb or fraction thereof or for each single plate weighing in excess of this amount.

Dimensional Tolerances (Note)

10. (*a*) The thickness tolerances for plates of leaded Muntz metal, naval brass, and admiralty metal shall be as prescribed in Table III.

(*b*) The thickness tolerances for plates of copper-nickel alloy and aluminum bronze shall be 25 per cent greater than those prescribed in Table III.

(*c*) If plates are machined, the thickness tolerances shall apply to the machined portion only.

(*d*) Closer thickness tolerances than those prescribed in Table III can be furnished by surface machining. This is a special product and is subject to agreement between the manufacturer and the purchaser.

(*e*) The diameters, lengths, or widths of plates shall be not less than those specified. The diameters, lengths, or widths of plates may exceed those specified by the amounts shown in Table IV.

NOTE.—For the purpose of determining conformance with the dimensional requirements prescribed in this specification, any measured value outside the specified limiting values for any dimension may be cause for rejection.

Flatness Tolerances

11. The flatness tolerances of individual plates shall not exceed those prescribed in Table V. The tolerances shown are the total permissible variations for plates as ordered, and do not apply to the 7-in. marginal area at the edge of the plate. Inspection for flatness shall be made by placing the plate on a flat-surface table with the side marked "Straight Side" up, applying a 72-in. straight edge when the size permits, or a shorter one equal to the dimension to be inspected, and measuring the depth of arc between the straight edge and the plate.

Workmanship and Finish

12. The plates shall be free from injurious defects and have a smooth, clean surface such as results from rolling operation, unless otherwise specified.

TABLE II.—TENSILE REQUIREMENTS.

Alloy	Thickness, in.	Tensile Strength, min, psi	Yield Strength,[a] min, psi	Elongation in 2 in., min, per cent
Leaded Muntz metal	2 and under	50 000	20 000	35.0
	Over 2 to 3.5, incl.	45 000	15 000	35.0
	Over 3.5 to 5, incl.	40 000	12 000	35.0
Naval brass	3 and under	50 000	20 000	35.0
	Over 3 to 5, incl.	50 000	18 000	35.0
Admiralty metal	4 and under	45 000	15 000	35.0
70-30 Copper-nickel alloy	2.5 and under	50 000	20 000	35.0
	Over 2.5 to 5, incl.	45 000	18 000	35.0
90-10 Copper-nickel alloy	2.5 and under	40 000	15 000	30.0
Aluminum bronze, Alloy D	2 and under	70 000	30 000	35.0
	Over 2 to 5, incl.	65 000	28 000	35.0
Aluminum bronze, Alloy E	2 and under	90 000	36 000	10.0
	Over 2 to 3.5, incl.	85 000	33 000	10.0
	Over 3.5 to 5, incl.	80 000	30 000	10.0

[a] Yield strength shall be determined as the stress producing an elongation of 0.5 per cent under load, that is, 0.01 in. in a gage length of 2 in.

TABLE III.—THICKNESS TOLERANCES.[a]

Thickness, in.	Thickness Tolerances, plus and minus,[b] in., for Diameters or Widths						
	36 in. or under	Over 36 to 60 in., incl.	Over 60 to 96 in., incl.	Over 96 to 132 in., incl.	Over 132 to 168 in., incl.	Over 168 to 204 in., incl.	Over 204 to 240 in., incl.
Over 0.300 to 0.500, incl.	0.025	0.027	0.029	0.031	0.034	0.037	0.040
Over 0.500 to 0.750, incl.	0.028	0.030	0.032	0.035	0.038	0.041	0.045
Over 0.750 to 1.000, incl.	0.033	0.035	0.037	0.040	0.043	0.046	0.050
Over 1.000 to 1.500, incl.	0.038	0.040	0.042	0.045	0.048	0.051	0.055
Over 1.500 to 1.750, incl.	0.043	0.045	0.047	0.050	0.053	0.056	0.060
Over 1.750 to 2.000, incl.	0.050	0.055	0.062	0.065	0.067	0.070	0.080
Over 2.000 to 5.000, incl.	0.058	0.062	0.065	.....	.....	.....	.....

[a] These thickness tolerances apply only for a distance of 7 in. inward from the edges of the plate as ordered.
[b] When tolerances are specified as all plus or all minus, double the values given

The fracture shall be uniform in color and grain throughout.

Marking

13. (*a*) The name or brand of the manufacturer shall be lightly stamped on

TABLE IV.—DIAMETER, LENGTH, OR WIDTH TOLERANCES.

Diameter, Length, or Width, in.	Permissible Excess in Diameter, Length, or Width, in.
36 or under	1/4
Over 36 to 60, incl.	5/16
Over 60 to 96, incl.	3/8
Over 96 to 132, incl.	7/16
Over 132 to 168, incl.	1/2
Over 168 to 204, incl.	9/16
Over 204 to 240, incl.	5/8

the thickness of each plate and on an outside surface in two places not less than 12 in. from the edges.

(*b*) The several sections of a condenser tube plate made up of two or more parts shall be properly identified for assembly into the completed tube plate, provided the purchaser conveys to the manufacturer the fact that the several parts are to be so assembled.

Inspection

14. The manufacturer shall afford the inspector representing the purchaser all reasonable facilities, without charge, to

TABLE V.—FLATNESS TOLERANCES.

Alloy	Flatness Tolerances (Depth of Arc) not to Exceed, in., for Diameters, Lengths, or Widths Shown		
	36 in. or under	Over 36 to 60 in., incl.	Over 60 to 240 in., incl.
Leaded Muntz metal and naval brass	0.050	0.055	0.060
Admiralty metal	0.050	0.065	0.075
70-30 and 90-10 Copper-nickel alloys	0.060	0.075	0.090
Aluminum bronze	0.060	.....	.....

satisfy him that the material is being furnished in accordance with this specification.

Rejection

15. Material that fails to conform to this specification will be rejected, and the manufacturer shall be notified within 30 days after receipt of the material.

SPECIFICATION FOR ALUMINUM AND ALUMINUM-ALLOY METAL ARC-WELDING ELECTRODES

SB-184

(IDENTICAL WITH ASTM SPECIFICATION B 184-43T)

Scope

1. These specifications cover coated or covered metal arc-welding electrodes for welding aluminum and aluminum alloys. The coating or covering is referred to in these specifications as covering.

Manufacture

2. The electrodes may be made by any methods that will yield a product conforming to the requirements of these specifications.

Standard Sizes and Lengths

3. Standard sizes and lengths of electrodes are as shown in the following table. In all cases, standard size refers to the diameter of the core wire.

Electrode Classification Number	Standard Sizes, Diameter of Core Wire, in.	Standard Lengths, in.
Al-2 and Al-43	1/32, 1/16, 3/32, 1/8, 5/32, 3/16, 1/4	14 18

Chemical Composition

4. (*a*) The electrode core wire for Al-2 electrodes shall conform to the requirements as to chemical composition prescribed for grade 99+ in the Standard Specifications for Aluminum Ingots for Remelting (A.S.T.M. Designation: B 24) which are shown in Table I.

(*b*) The electrode core wire for Al-43 electrodes shall conform to the requirements as to chemical composition for alloy S2 as prescribed in the Tentative Specifications for Aluminum-Base Alloy Sand Castings (A.S.T.M. Designation: B 26) which are shown in Table I.

Weld Tests

5. (*a*) To determine the suitability of the electrodes for producing welds of adequate strength, ductility, and soundness, tension and bend tests shall be conducted as prescribed in the following Sections 6 to 8.

(*b*) For electrodes 5/32 in. and smaller, the performance of these sizes shall be judged by the performance of 5/32-in. electrodes of the same classification. For electrodes 3/16 in. and larger the performance shall be judged by the performance of 1/4-in. electrodes of the same classification.

Preparations of Test Specimens

6. (*a*) A test plate shall be prepared as shown in Fig. 1, using the size of electrode prescribed in Section 5 (*b*). The material for the test plate shall conform to the following specifications of the American Society for Testing Materials:

(*1*) *For Testing Electrodes of Classification No. A1–2.*—Alloy A2 as prescribed

TABLE I.—CHEMICAL REQUIREMENTS.

NOTE.—Analysis shall be made only for the elements specifically mentioned in this table. If, however, the presence of other elements is indicated in the course of routine analysis, further analysis shall be made to determine that the total of these other elements is not present in excess of the limits specified for "total other impurities" in the last item in the table.

	Electrode Classification	
	Al-2	Al-43
Copper, max., per cent	0.2	0.4
Iron, max., per cent	0.6	0.8
Silicon, per cent	0.5 max.	4.5 to 6.0
Magnesium, max., per cent	0.05	0.05
Manganese, max., per cent	0.05	0.3
Zinc, max., per cent	0.05	0.2
Titanium, max., per cent	0.03	0.2
Nickel, max., per cent	0.03	
Aluminum, per cent	99.0 min.	remainder
Total other impurities, per cent	0.1[a]	0.3

[a] None of the elements included in "total other impurities" shall exceed 0.03 per cent maximum.

in the Tentative Specifications for Aluminum and Aluminum-Alloy Sheet and Plate (ASTM Designation: B 209).

(*2*) *For Testing Electrodes of Classification No. A1–43.*—Alloy M1 as prescribed in the Tentative Specifications for Aluminum and Aluminum Alloy Sheet and Plate for Use in Pressure Vessels (ASTM Designation: B 178).

(*b*) The plate shall be preheated before welding to between 350 and 400 F. All welding shall be done from one side in the flat position. No stress relieving or other thermal treatment shall be done after welding. Test plates shall preferably be so supported that warping due to welding will not cause the finished test plate to be out of line by more than 5 deg. If test plates become warped more than 5 deg., they shall be straightened cold.

(*c*) Two reduced-section tension specimens, one guided-face-bend specimen,

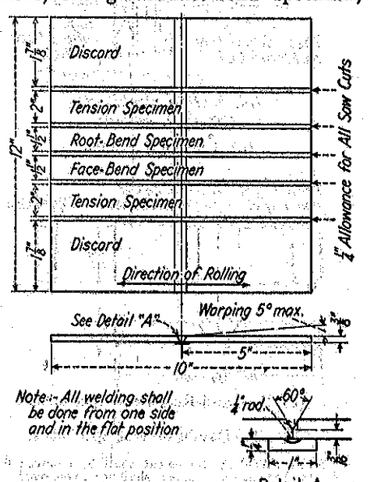

FIG. 1.—Requirements for Preparation of Test Plate for Face- and Root-Bend Specimens.

and one guided-root-bend specimen shall be machined from the finished test plate as shown in Fig. 2. These specimens are in accordance with specimens H-1, E-1, and F-1, respectively, of the A.W.S. Standard Methods for Mechanical Testing of Welds.

Tension and Bend Test Procedures

7. (*a*) *Reduced-Section Tension Specimens.*—Before testing, the least width and corresponding thickness of the reduced section of the test specimen shall be measured in inches. The cross-sectional area shall be obtained by multiplying the width by the thickness. The specimen shall be ruptured by a tension load and the maximum load in pounds determined. The tensile strength in pounds per square inch shall be calculated by dividing the maximum load by the cross-sectional area.

(*b*) *Guided-Root- and Face-Bend Specimens.*—Each specimen shall be bent in a jig having the working contour shown in Fig. 3, and otherwise substantially in accordance with that figure. Any convenient means may be used for moving the plunger member with relation to the die member. The specimen shall be placed on the die member of the jig with the weld at mid-span. Face-bend specimens shall be placed with the face of the weld directed toward the gap, and root-bend specimens shall be placed with the root of the weld directed toward the gap. The two members of the jig shall be forced together until the specimen conforms to a U-shape, and until a wire $\frac{1}{32}$ in. in diameter cannot be placed between the specimen at any point on the curvature of the plunger member of the jig. The specimen shall then be removed from the jig.

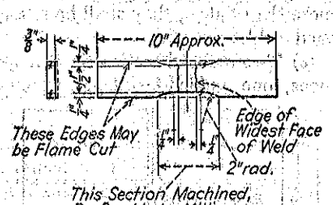

(*a*) Tension Specimen.

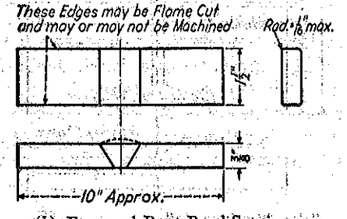

(*b*) Face-and-Root-Bend Specimens.

FIG. 2.—Details of Test Specimens.

NOTE.—Weld reinforcement shall be removed flush with the base metal; undercut shall not be removed. All machining shall be done transverse to the weld.
Tension corners of bend specimens shall be broken slightly with a file.
All specimens shall be plainly marked on both ends.

Test Results Required

8. (*a*) *Reduced-Section Tension Tests.*—For electrodes of classification No. Al-2, the tensile strength of each specimen tested shall be not less than 12,000 psi. For electrodes of classification No. Al-43, the tensile strength of each specimen shall be not less than 14,000 psi.

(*b*) *Guided Root- and Face-Bend Tests.*—The convex surface of the bend test specimens shall be examined for the appearance of cracks or other open defects. Any specimen in which a crack or other open defect is present after bending, exceeding $\frac{1}{8}$ in. measured in any direction, shall be considered as having failed. Cracks occurring on the corners of the specimen during testing shall not be considered.

Permissible Variations in Dimensions

9. (*a*) Electrodes shall be bare or free from covering for a distance of about 1 in. but not more than $1\frac{1}{4}$ in., for making contact with the holder.

(*b*) The arc end of each electrode shall either be bare or the coating easily removable with the fingers to permit easy striking of the arc. The length of any bare portion of the arc end, measured from the end to the point where the full cross-section of the coating obtains, shall not exceed one core-wire diameter or in any case $\frac{1}{8}$ in.

(*c*) The diameter of the core wire shall not vary more than plus or minus 0.002 in. from the standard size specified. The length shall not vary more than plus or minus $\frac{1}{8}$ in. from that specified.

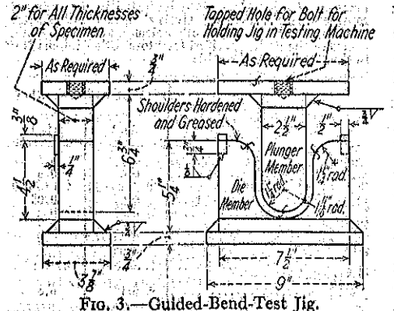

FIG. 3.—Guided-Bend-Test Jig.
Hardened rolls may be used on shoulders if desired.
Specific dimensions for ¾-in. specimen.

Electrode Coverings

10. (*a*) Electrodes shall be suitable for making butt and fillet welds in the flat position and for making butt welds in the vertical position.

(*b*) The coverings shall have sufficient electrical resistance at or below 100 F. to insulate effectively against a difference of potential of 100 v.

(*c*) The coverings shall during welding be consumed uniformly on all sides and shall not blister or burn back from the core wire.

(*d*) The slag produced shall be readily removable.

(*e*) The fumes given off from the covering when used in well-ventilated places shall not be injurious to the health of the welding operator.

(*f*) The coverings shall not blister when heated to 400 F.

Workmanship

11. (*a*) The core of electrodes shall be of uniform quality and free from injurious segregation, oxides, pipe, seams, or other irregularities.

(*b*) The coverings on electrodes shall be such that they are not readily damaged by ordinary handling and shall be of commercially uniform thickness and shall present a workmanlike appearance. Coverings shall be free from injurious scabs, blisters, abnormal pockmarks, bruises, or other surface defects.

Packing

12. (*a*) Electrodes shall be suitably wrapped, packed, boxed, or crated to insure against mechanical damage during shipment or storage. The method of packaging shall be such as to protect the flux coating from absorbing moisture. All packages shall be dated at the time of packing.

(*b*) Standard packages shall be 1 lb. or 10 lb. One-pound packages shall be packed in moisture-resistant wrappings. Ten-pound packages shall be packed in moisture-resistant wrappings, or shall be hermetically sealed, containing ten 1-lb. packages in moisture-resistant wrappings.

Marking

13. All bundles, packages, or boxes, shall be legibly marked with the following information:

(*a*) Name of article,
(*b*) Classification number,
(*c*) Manufacturer's name and trade designation,
(*d*) Standard size, length, and net weight, and
(*e*) Guarantee.

Guarantee

14. The manufacturer shall make tests at frequent intervals in accordance with the methods prescribed in these specifications, and shall guarantee that the electrodes in all sizes and classes conform to these specifications and each container shall be so marked. The manufacturer's responsibility shall be limited to replacement of any electrodes which do not conform to the requirements of these specifications.

CHANGES IN ALUMINUM ALLOY DESIGNATIONS

In 1955 the American Society for Testing Materials adopted for use in their specifications covering aluminum alloys designations established in accordance with the Recommended Practice for Codification of Light Metals and Alloys, Cast and Wrought (ASTM Designation: B 275).

By 1960 they changed the method for designating wrought aluminum alloys to the system developed by The Aluminum Association and adopted by the American Standards Association. This system is given in the American Standard Alloy Designation System for Wrought Aluminum (ASA No.: H35.1–1957).

Starting in 1960 all ASTM Specifications covering wrought aluminum alloys show the new alloy numbers only.

Likewise, all specifications for wrought aluminum alloys adopted for use by the ASME Boiler and Pressure Vessel Committee and published in Section II, Material Specifications, of the Boiler and Pressure Vessel Code in the future will show the new alloy numbers only.

There is listed below the new AA alloy numbers and the corresponding ASTM alloy numbers previously used. Some of these aluminum alloys have not been adopted for Code construction and the user should check the ASME Specification under consideration.

NEW AA Number	OLD ASTM Number	NEW AA Number	OLD ASTM Number
1060	996A	5154	GR40A
1100	990A	5254	GR40B
1230	CG42A Cladding	5454	GM31A
2011	CB60A	5456	GM51A
2014	CS41A	5652	GR20B
2017	CM41A	6003	CS41A Cladding
2018	CN42C	6053	GS11B
2024	CG42A	6061	GS11A
2025	CS41C	6062	GS11C
2218	CN42D	6063	GS10A
3003	M1A	6066	SG11B
3004	MG11A	6151	SG11A
4032	SG121A	6253	GM50A Cladding
5005	G1B	7072	(GS11A Cladding (M1A Cladding (MG11A Cladding (ZG62A Cladding
5050	G1A		
5052	GR20A		
5056	GM50A		
5083	GM41A	7075	ZG62A
5086	GM40A		

SPECIFICATION FOR ALUMINUM-ALLOY SHEET AND PLATE

SB-209

(IDENTICAL WITH ASTM SPECIFICATION B 209-61 EXCEPT THAT ALLOYS ALCLAD 2014, 2024, ALCLAD 2024, 5005, 5254, 5652, 7075, AND ALCLAD 7075; THICKNESSES UNDER 0.051 IN.; CERTAIN TEMPERS, AND THE RELINQUISHMENT ON YIELD STRENGTH TESTS HAVE BEEN DELETED)

Scope

1. This specification covers aluminum-alloy sheet and plate, designated as shown in Table I. Commercial flat sheet shall be supplied on orders for sheet, except when coiled sheet is specifically ordered. The terms sheet and plate as used in this specification apply to the following:

Sheet.—Material under 0.250 in. in thickness.

Plate.—Material 0.250 in. and greater in thickness.

Basis of Purchase

2. Orders for material under this specification shall include the following information:

(*1*) Quantity in pieces or pounds,
(*2*) Alloy (Section 4),
(*3*) Temper (Section 7),
(*4*) Whether bend tests are required (Section 8),
(*5*) Dimensions (thickness, width, and length; or width and coil size if applicable),
(*6*) Whether marking for identification is required (Section 16), and
(*7*) Whether inspection is required at the manufacturer's works (Section 18(*a*)).

Manufacture

3. The materials used shall be such as to produce products that comply with the requirements as to chemical composition and tensile properties prescribed in this specification.

Chemical Composition

4. The sheet and plate shall conform to the requirements as to chemical composition prescribed in Table I.

Sampling for Chemical Analysis

5. (*a*) Samples for chemical analysis shall be taken in accordance with the Method of Sampling Wrought Nonferrous Metals and Alloys for Determination of Chemical Composition (ASTM Designation: E 55), except that the weight of the prepared sample may be a minimum of 75 g. A portion shall be taken to represent each 2000 lb, or fraction thereof, of material of a given alloy in the shipment, and a sample prepared from each portion. If agreed upon by the manufacturer and the purchaser, a composite sample representing all portions taken from a given alloy in the shipment may be used for the analysis in lieu of analyzing samples from each portion. If the manufacturer has made an analysis of the material during the course of manufacture, he shall not be required to sample and analyze the finished product.

(*b*) Samples for determining the analysis of the core in clad materials may be taken in the manner described in Paragraph (*a*), but either the effect of the composition of the cladding shall be considered in calculating the results, or the cladding shall be substantially removed from the sheet or plate before the final sample for analysis is prepared.

NOTE.—The analysis of clad material in the finished state is a difficult matter because of the relatively thin layer of cladding present and the effect of diffusion between the core and cladding during heat treatment. A reasonably satisfactory determination of the core composition can be made if the cladding is substantially removed from the sheet before analysis. Determination of the cladding analysis is considerably more difficult not only because of its thinness, but also because diffusion causes an indeterminate change in the composition. That the correct cladding alloy has been used, however, can usually be determined reasonably well by a combination of metallographic examination and spectrographic analysis of the surface at several widely separated points.

Methods of Chemical Analysis

6. The chemical analysis shall be made in accordance with the Standard Methods for Chemical Analysis of Aluminum and Aluminum-Base Alloys (ASTM Designation: E 34), or by any other approved method agreed upon by the manufacturer and the purchaser. The analysis may be made spectrochemically, provided that, in case of dispute, the results secured by Methods E 34 shall be the basis for acceptance.

Tensile Properties

7. Sheet and plate shall be supplied in the alloy, temper, and size specified in the contract or order and shall conform to the requirements as to tensile properties prescribed in Table II.

Bending Properties

8. When bend requirements are specified on the purchase order, sheet and plate shall be capable of being bent cold through an angle of 180 deg around a pin having a diameter equal to N times the thickness of the sheet or plate without cracking, the value of N being as prescribed in Table II for the different alloys, tempers, and thicknesses, but the manufacturer need not conduct the test. When bend tests are made, the specimens for sheet shall be the full thickness of the material, approximately $\frac{3}{4}$ in. in width, and when practical, at least 6 in. in length. Such specimens may be taken in any direction and their edges may be rounded to a radius of approximately $\frac{1}{16}$

TABLE I.—CHEMICAL REQUIREMENTS.

NOTE 1.—Where single units are shown, these indicate the maximum amounts permitted.

NOTE 2.—Analysis shall regularly be made only for the elements specified in this table. If, however, the presence of other elements is suspected, or indicated in the course of routine analysis, further analysis shall be made to determine that these elements are not in excess of the amount specified.

NOTE 3.—The following applies to all specified limits in this table: For purposes of acceptance and rejection, an observed value or a calculated value obtained from analysis should be rounded off to the nearest unit in the last right-hand place of figures used in expressing the specified limit.

Alloy[a]	Aluminum, per cent	Copper, per cent	Iron, per cent	Silicon, per cent	Manganese, per cent	Magnesium, per cent	Zinc, per cent	Chromium, per cent	Titanium, per cent	Beryllium, per cent	Other Elements, per cent: Each	Other Elements, per cent: Total
1060	99.60 min[b]	0.05	0.35	0.25	0.03	0.03	0.05	...	0.03	...	0.03	...
1100	99.0 min[b]	0.20	[c]	[c]	0.05	...	0.10	...	...	...	0.05	0.15
3003	remainder	0.20	0.7	0.6	1.0 to 1.5	...	0.10	...	...	...	0.05	0.15
Alclad 3003 (Core, 3003	remainder	0.20	0.7	0.6	1.0 to 1.5	...	0.10	...	...	...	0.05	0.15
Alclad 3003 (Cladding, [d] 7072	remainder	0.10	0.7	[e]	0.10 to 1.5	0.10 max	0.8 to 1.3	...	...	...	0.05	0.15
3004	remainder	0.25	0.7	0.30	1.0 to 1.5	0.8 to 1.3	0.25	...	...	...	0.05	0.15
Alclad 3004 (Core, 3004	remainder	0.25	0.7	0.30	1.0 to 1.5	0.8 to 1.3	0.25	...	...	...	0.05	0.15
Alclad 3004 (Cladding, [d] 7072	remainder	0.10	[c]	[e]	0.10 to 1.5	0.10 max	0.8 to 1.3	0.10	...	...	0.05	0.15
5050	remainder	0.20	0.7	0.40	0.10	1.0 to 1.8	0.25	0.10	...	...	0.05	0.15
5052	remainder	0.10	0.40	0.40	0.10	2.2 to 2.8	0.10	0.15 to 0.35	0.15	...	0.05	0.15
5083	remainder	0.10	0.40	0.40	0.30 to 1.0	4.0 to 4.9	0.25	0.05 to 0.25	0.15	...	0.05	0.15
5086	remainder	0.10	0.50	0.40	0.20 to 0.7	3.5 to 4.5	0.25	0.05 to 0.25	0.15	...	0.05	0.15
5154	remainder	0.10	[c]	[e]	0.10	3.1 to 3.9	0.20	0.15 to 0.35	0.20	...	0.05	0.15
5454	remainder	0.10	[f]	[f]	0.50 to 1.0	2.4 to 3.0	0.25	0.05 to 0.20	0.20	...	0.05	0.15
5456	remainder	0.10	[c]	[e]	0.50 to 1.0	4.7 to 5.5	0.25	0.05 to 0.20	0.20	...	0.05	0.15
6061	remainder	0.15 to 0.40	0.7	0.40 to 0.8	0.15	0.8 to 1.2	0.25	0.15 to 0.35	0.15	...	0.05	0.15
Alclad 6061 (Core, 6061	remainder	0.15 to 0.40	0.7	0.40 to 0.8	0.15	0.8 to 1.2	0.25	0.15 to 0.35	0.15	...	0.05	0.15
Alclad 6061 (Cladding, [d] 7072	remainder	0.10	[c]	[e]	0.10	0.10	0.8 to 1.3	...	...	...	...	...

[a] These AA alloy designations were established in accordance with the American Standard Alloy Designation System for Wrought Aluminum (ASA No.: H35.1–1967).

[b] Composition of the cladding alloy as applied during the course of manufacture. The sample from the finished sheet or plate shall not be required to conform to these limits.

[c] The permissible maximum amount of iron plus silicon is 1.0 per cent.

[d] The permissible maximum amount of iron plus silicon is 0.7 per cent.

[e] The permissible maximum amount of iron plus silicon is 0.45 per cent.

[f] The permissible maximum amount of iron plus silicon is 0.40 per cent.

[g] By difference.

in. if desired. For sheet less than ¾ in. in width, the specimens should be the full width of the material.

Test Specimens

9. Tension test specimens for sheet or plate of alloys 1100, 1060, 5050, 5454, 5086, 5083, 5456, 5052, 5154, 3003, alclad 3003, 3004, and alclad 3004 shall be taken parallel to the direction of rolling; for sheet or plate of alloys 6061 and alclad 6061, the tension test specimens shall be taken perpendicular to the direction of rolling for widths 9 in. and greater, and parallel to the direction of rolling for widths less than 9 in. For sheet and plate less than 0.500 in. in thickness, the standard sheet-type specimen shown in Fig. 7 of the Methods of Tension Testing of Metallic Materials (ASTM Designation: E 8) shall be used. For plate 0.500 in. or over in thickness, the standard specimen ½ in. in diameter shown in Fig. 8 of Methods E 8 shall be used, unless the size of the material makes this impracticable. In such cases, round specimens of smaller size proportional to the standard specimen shown in Fig. 8 of Methods E 8 may be used provided that in no case shall the dimensions of the smallest specimen be less than the following:

Diameter of reduced section, in.	¼
Length of reduced section, in.	1¼
Radius of fillet, in.	¼
Diameter of end section, in.	⅜
Over-all length, in.:	
With threaded or shouldered ends	3
With plain cylindrical ends	4

For plate over 1½ in. in thickness, the specimen shall be taken midway between the center and surface of the plate.

Number of Tests

10. One tension test specimen shall be taken from a random sheet representing each 2000 lb of sheet, or from a random plate representing each 4000 lb of plate of the same alloy, temper, and thickness in the shipment, or such other quantity as may be agreed upon by the manufacturer and the purchaser.

Methods of Testing

11. The tension tests shall be made in accordance with the Methods E 8.

NOTE.—The values obtained for the tensile properties covered by this specification are not seriously affected by variations in speed of testing. A considerable range of testing speed is permissible; however, the rate of stressing to the yield strength should not exceed 100,000 psi per min, and above the yield strength the movement per minute of the head under load should not exceed 0.5 in. per in. of gage length (or distance between grips for specimens not having reduced sections). Care must be exercised, especially when making yield strength determinations, that the speed of testing does not exceed the ability of the strain- and load-indicating equipment to function satisfactorily.

TABLE II.—TENSILE REQUIREMENTS.

NOTE.—For purposes of determining conformance with these specifications, each value for tensile strength and yield strength shall be rounded off to the nearest 100 psi, and each value for elongation shall be rounded off to the nearest 0.5 per cent, both in accordance with the rounding off method of the Recommended Practices for Designating Significant Places in Specified Limiting Values (ASTM Designation: E 29).

Temper	Thickness, in.	Tensile Strength, psi: Minimum	Tensile Strength, psi: Maximum	Yield Strength, (0.2 per cent offset), psi: Minimum	Yield Strength, (0.2 per cent offset), psi: Maximum	Elongation in 2 in., or 4 x Diam., minimum per cent	Bend Diameter Factor, N
Alloy 1060							
O	0.051 to 3.000	9 500	....	2 500	....	25	..
H12	0.051 to 2.000	11 000	....	9 000	....	12	..
H14	0.051 to 1.000	12 000	....	10 000	....	10	..
H112	0.250 to 0.499	12 000	....	7 000	....	10	..
	0.500 to 1.000	11 000	....	5 000	....	20	..
	1.001 to 3.000	10 000	....	4 000	....	25	..
Alloy 1100							
O	0.051 to 0.249	11 000	15 500	3 500	....	30	0
	0.250 to 3.000	11 000	15 500	3 500	....	28	0
H12	0.051 to 0.113	14 000	19 000	11 000	....	8	0
	0.114 to 0.499	14 000	19 000	11 000	....	9	0
	0.500 to 2.000	14 000	19 000	11 000	....	12	0
H14	0.051 to 0.113	16 000	21 000	14 000	....	5	0
	0.114 to 0.499	16 000	21 000	14 000	....	6	0
	0.500 to 1.000	16 000	21 000	14 000	....	10	0
H112	0.250 to 0.499	13 000	....	7 000	....	9	..
	0.500 to 2.000	12 000	....	5 000	....	14	..
	2.001 to 3.000	11 500	....	4 500	....	20	..
Alloy 3003							
O	0.051 to 0.249	14 000	19 000	5 000	....	25	0
	0.250 to 3.000	14 000	19 000	5 000	....	23	..
H12	0.051 to 0.113	17 000	23 000	12 000	....	6	0
	0.114 to 0.161	17 000	23 000	12 000	....	7	0
	0.162 to 0.249	17 000	23 000	12 000	....	8	0
	0.250 to 0.499	17 000	23 000	12 000	....	9	..
	0.500 to 2.000	17 000	23 000	12 000	....	10	..
H14	0.051 to 0.113	20 000	26 000	17 000	....	5	0
	0.114 to 0.161	20 000	26 000	17 000	....	6	2
	0.162 to 0.249	20 000	26 000	17 000	....	7	2
	0.250 to 0.499	20 000	26 000	17 000	....	8	..
	0.500 to 1.000	20 000	26 000	17 000	....	10	..
H112	0.250 to 0.499	17 000	....	10 000	....	8	..
	0.500 to 2.000	15 000	....	6 000	....	12	..
	2.001 to 3.000	14 500	....	6 000	....	18	..
Alloy Alclad 3003							
O	0.051 to 0.249	13 000	18 000	4 500	....	25	..
	0.250 to 0.499	13 000	18 000	4 500	....	23	..
	0.500 to 3.000	14 000/	19 000/	4 500	....	23	..
H12	0.051 to 0.113	16 000	22 000	11 000	....	6	..
	0.114 to 0.161	16 000	22 000	11 000	....	7	..
	0.162 to 0.249	16 000	22 000	11 000	....	8	..
	0.250 to 0.499	16 000	22 000	11 000	....	9	..
	0.500 to 2.000	17 000/	23 000/	12 000/	....	10	..
H14	0.051 to 0.113	19 000	25 000	16 000	....	5	..
	0.114 to 0.161	19 000	25 000	16 000	....	6	..
	0.162 to 0.249	19 000	25 000	16 000	....	7	..
	0.250 to 0.499	19 000	25 000	16 000	....	8	..
	0.500 to 1.000	20 000/	26 000/	17 000/	....	10	..
H112	0.250 to 0.499	16 000	....	9 000	....	8	..
	0.500 to 2.000	15 000/	....	6 000/	....	12	..
	2.001 to 3.000	14 500/	....	6 000/	....	18	..

Retests

12. If any tension test specimen fails to conform to the requirements prescribed in Table II, two additional specimens shall be selected from other sheets or plates in the lot and tested. If either of these specimens fails to conform to the applicable requirements, the material may be rejected. If, however, the failure of the specimens to conform with the requirements is the result of an inadequate thermal treatment, the material may be reannealed or reheat-treated, as applicable, and resampled in accordance with Section 10. Only one such reworking of the material shall be permitted.

Cladding Thickness

13. (*a*) The aluminum or aluminum-alloy plates which are bonded to the alloy ingot or slab preparatory to rolling to the specified thickness of plate or sheet shall be of the composition shown in Table I, and shall each have a thickness not less than that shown in Table III for the alloy specified.

(*b*) When the thickness of the cladding is to be determined on finished material, not less than three transverse samples approximately ½ in. in length shall be mounted to expose an edge perpendicular to the plane of the sample and polished for microscopic examination. Using a magnification of 100 diameters, the maximum and minimum coating thickness shall be measured in each of five fields approximately 0.1 in. apart along both sides of the cross-section. The average of the ten thickness measurements on each side is the average coating thickness, and shall be not less than 80 per cent of the thickness calculated from the above requirements.

Permissible Variations in Dimensions

14. (*a*) *Thickness.*—The thickness of

TABLE II.—TENSILE REQUIREMENTS (*Continued*).

Temper	Thickness, in.	Tensile Strength, psi		Yield Strength (0.2 per cent offset), psi		Elongation in 2 in., or 4 x Diam. minimum, per cent	Bend Diameter Factor, *N*
		Minimum	Maximum	Minimum	Maximum		
Alloy 3004							
O	0.051 to 0.249	22 000	29 000	8 500	....	18	0
	0.250 to 3.000	22 000	29 000	8 500	....	16	..
H32	0.051 to 0.113	28 000	35 000	21 000	....	5	2
	0.114 to 2.000	28 000	35 000	21 000	....	6	..
H34	0.051 to 0.113	32 000	38 000	25 000	....	4	4
	0.114 to 1.000	32 000	38 000	25 000	....	5	..
H112	0.250 to 3.000	23 000	....	9 000	....	7	..
Alclad 3004							
O	0.051 to 0.249	21 000	28 000	8 000	....	18	..
	0.250 to 0.499	21 000	28 000	8 000	....	16	..
	0.500 to 3.000	22 000/	29 000/	8 500/	....	16	..
H32	0.051 to 0.113	27 000	34 000	20 000	....	5	..
	0.114 to 0.249	27 000	34 000	20 000	....	6	..
	0.250 to 0.499	27 000	....	20 000	....	6	..
	0.500 to 2.000	28 000/	....	21 000/	....	6	..
H34	0.051 to 0.113	31 000	37 000	24 000	....	4	..
	0.114 to 0.249	31 000	37 000	24 000	....	5	..
	0.250 to 0.499	31 000	....	24 000	....	5	..
	0.500 to 1.000	32 000/	....	25 000/	....	5	..
H112	0.250 to 0.499	22 000	....	8 500	....	7	..
	0.500 to 3.000	23 000/	....	9 000/	....	7	..
Alloy 5050							
O	0.051 to 0.113	18 000	24 000	6 000	....	20	0
	0.114 to 0.249	18 000	24 000	6 000	....	22	0
	0.250 to 3.000	18 000	24 000	6 000	....	20	2
H32	0.051 to 0.249	22 000	28 000	16 000	....	6	2
H34	0.051 to 0.249	25 000	31 000	20 000	....	5	3
H112	0.250 to 3.000	20 000	....	8 000	....	12	..
Alloy 5052							
O	0.051 to 0.249	25 000	31 000	9 500	....	20	0
	0.250 to 3.000	25 000	31 000	9 500	....	18	..
H32	0.051 to 0.113	31 000	38 000	23 000	....	7	2
	0.114 to 0.249	31 000	38 000	23 000	....	9	3
	0.250 to 0.499	31 000	38 000	23 000	....	11	..
	0.500 to 2.000	31 000	38 000	23 000	....	12	..
H34	0.051 to 0.113	34 000	41 000	26 000	....	6	2
	0.114 to 0.249	34 000	41 000	26 000	....	7	3
	0.250 to 1.000	34 000	41 000	26 000	....	10	..
H112	0.250 to 0.499	28 000	....	16 000	....	7	..
	0.500 to 2.000	25 000	....	9 500	....	12	..
	2.001 to 3.000	25 000	....	9 500	....	16	..
Alloy 5083							
O	0.051 to 2.000	40 000	50 000	18 000	....	16	..
H113	0.188 to 2.000	44 000	56 000	31 000	43 000	12	..

flat sheet, coiled sheet, and plate shall not vary from that specified by more than the respective permissible variations prescribed in Tables IV and V.

(*b*) *Length, Width, and Lateral Bow.*—Coiled sheet shall not vary in width or in lateral bow from that specified by more than the permissible variations prescribed in Tables VI and VII, respectively. Flat sheet or plate shall not vary in width, length, flatness or lateral bow from that specified by more than the permissible variations prescribed in Tables VIII, IX, X, XI, and XII.

Workmanship and Finish

15. All sheet and plate shall be commercially flat and free from buckles; they shall be free from injurious surface defects and shall have a workmanlike finish. Unless otherwise specified, sheets and plates shall be supplied in the mill finish.

Marking for Identification

16. (*a*) When identification marking is specified on the purchase order, all sheet and plate shall be marked with the manufacturer's name or trade mark and the applicable alloy and temper designations, the latter to be in accordance with ASA and ASTM codification systems (ASA No. H 35.1–1957 and ASTM Designation: B 296) or the commercial systems. Identification characters shall have a minimum height of $\frac{1}{4}$ in. The marking material shall be such as to resist obliteration during normal handling and shall be removable by normal cleaning methods; however, ghost images of the characters may remain. On flat sheet and plate, markings shall appear at each end. Coils shall be marked near the outside end.

(*b*) The foregoing requirements are minimum; marking systems which involve added information, larger characters and greater frequencies are acceptable under this specification.

Packing, Marking, and Shipping

17. (*a*) The material shall be packed in such a manner as to prevent damage in ordinary handling and transportation. The type of packing and gross weight of individual containers shall be left to the discretion of the manufacturer unless

TABLE II.—TENSILE REQUIREMENTS (*Continued*).

Temper	Thickness, in.	Tensile Strength, psi		Yield Strength (0.2 per cent offset), psi		Elongation in 2 in., or 4 x Diam., minimum per cent	Bend Diameter Factor, *N*
		Minimum	Maximum	Minimum	Maximum		
Alloy 5086							
O	0.051 to 0.249	35 000	42 000	14 000	....	18	..
	0.188 to 2.000	35 000	42 000	14 000	....	14	..
H32	0.051 to 0.249	40 000	47 000	28 000	....	8	..
	0.250 to 2.000	40 000	47 000	28 000	....	12	..
H34	0.051 to 0.249	44 000	51 000	34 000	....	6	..
	0.250 to 1.000	44 000	51 000	34 000	....	10	..
H112	0.250 to 0.499	36 000	....	18 000	....	8	..
	0.500 to 1.000	35 000	....	16 000	....	10	..
	1.001 to 2.000	35 000	....	14 000	....	14	..
	2.001 to 3.000	34 000	....	14 000	....	14	..
Alloy 5154							
O	0.051 to 0.113	30 000	41 000	11 000	....	16	..
	0.114 to 3.000	30 000	41 000	11 000	....	18	..
H32	0.051 to 0.249	36 000	43 000	26 000	....	8	..
	0.250 to 2.000	36 000	43 000	26 000	....	12	..
H34	0.051 to 0.161	39 000	46 000	29 000	....	6	..
	0.162 to 0.249	39 000	46 000	29 000	....	7	..
	0.250 to 1.000	39 000	46 000	29 000	....	10	..
H112	0.250 to 0.499	32 000	....	18 000	....	8	..
	0.500 to 2.000	30 000	....	11 000	....	11	..
	2.001 to 3.000	30 000	....	11 000	....	15	..
Alloy 5454							
O	0.051 to 0.113	31 000	41 000	12 000	....	16	..
	0.114 to 3.000	31 000	41 000	12 000	....	18	..
H32	0.051 to 0.249	36 000	44 000	26 000	....	8	..
	0.250 to 2.000	36 000	44 000	26 000	....	12	..
H34	0.051 to 0.161	39 000	47 000	29 000	....	6	..
	0.162 to 0.249	39 000	47 000	29 000	....	7	..
	0.250 to 1.000	39 000	47 000	29 000	....	10	..
H112	0.250 to 0.499	32 000	....	18 000	....	8	..
	0.500 to 2.000	31 000	....	12 000	....	11	..
	2.001 to 3.000	31 000	....	12 000	....	15	..
Alloy 5456							
O	0.051 to 2.000	42 000	53 000	19 000	30 000	16	..
H321	0.188 to 0.624	46 000	59 000	33 000	46 000	12	..
	0.625 to 1.250	46 000	56 000	33 000	45 000	12	..
	1.251 to 2.000	44 000	56 000	31 000	43 000	12	..
Alloy 6061							
T4	0.021 to 0.249	30 000	....	16 000	....	16	..
	0.250 to 1.000	30 000	....	16 000	....	18	..
	1.001 to 3.000	30 000	....	16 000	....	16	..
T6	0.021 to 0.499	42 000	....	35 000	....	10	..
	0.500 to 1.000	42 000	....	35 000	....	9	..
	1.001 to 2.000	42 000	....	35 000	....	8	..
	2.001 to 4.500	42 000	....	35 000	....	6	..

otherwise agreed upon. Each package or container shall contain only one size, alloy, or temper of material when packed for shipment unless otherwise agreed upon.

(*b*) Each package or container shall be marked with the purchase order number, size of material, specification number, alloy and temper, the latter to be in accordance with ASA and ASTM codification systems (ASA No. H35.1-1957 and ASTM Designation: B 296), gross and net weights, and name of the manufacturer.

(*c*) Packages or containers shall be such as to insure acceptance by common or other carriers for safe transportation at the lowest rate to the point of delivery

Inspection

18. (*a*) If the purchaser desires to make an inspection of the material at the manufacturer's works where the material is made, it shall be so stated in the contract or purchase order.

(*b*) If the purchaser elects to have the inspection made at the manufacturer's works, the manufacturer shall afford the inspector representing the purchaser, without charge, all reasonable facilities to satisfy him that the material is being furnished in accordance with this specification. All tests and inspection shall be so conducted as not to interfere unnecessarily with the operation of the works.

Rejection

19. Material failing to conform to the requirements of this specification, or in which defects are discovered during subsequent manufacturing operations, may be rejected. If rejected, the manufacturer's responsibility shall be limited to replacing the rejected material without charge to the purchaser. The full weight of the rejected original material shall be returned to the manufacturer.

TABLE II.—TENSILE REQUIREMENTS (*Concluded*)

Temper	Thickness, in.	Tensile Strength, psi		Yield Strength (0.2 per cent offset), psi		Elongation in 2 in., or 4 x Diam., minimum per cent	Bend Diameter Factor, *N*
		Minimum	Maximum	Minimum	Maximum		
		Alloy Alclad 6061					
T4	0.051 to 0.249	27 000	....	14 000	....	16	..
	0.250 to 0.499	27 000	....	14 000	....	18	..
	0.500 to 3.000	30 000/	....	16 000/	....	18	..
T6	0.051 to 0.499	38 000	....	32 000	....	10	..
	0.500 to 1.000	42 000/	....	35 000/	....	9	..
	1.001 to 2.000	42 000/	....	35 000/	....	8	..
	2.001 to 3.000	42 000/	....	35 000/	....	6	..

/ The tension test specimen from plate 0.500 in. and thicker is machined from the core and does not include the cladding alloy.

TABLE III.—THICKNESS REQUIREMENTS OF CLADDING.

Alloy	Total Composite Thickness of Finished Sheet, in.	Minimum Thickness of Cladding, in.[a]
Alclad 3003	all	0.10 *T*
Alclad 3004	all	0.05 *T*
Alclad 6061	all	0.05 *T*

[a] *T* is the total composite thickness in inches.

TABLE IV.—PERMISSIBLE VARIATIONS IN THICKNESS OF ALLOYS 1100, 1060, 5050, 3003, AND ALCLAD 3003 FLAT SHEET, COILED SHEET, AND PLATE, PLUS OR MINUS, IN.

Thickness, in.[a]	Width, in.						
	18 and under	Over 18 to 36	Over 36 to 54	Over 54 to 72	Over 72 to 90	Over 90 to 102	Over 102 to 132
0.046 to 0.068	0.0025	0.003	0.004	0.005	0.006	...	...
0.069 to 0.076	0.0025	0.003	0.004	0.006	0.008	...	...
0.077 to 0.096	0.003	0.003	0.004	0.006	0.008	...	...
0.097 to 0.108	0.0035	0.004	0.005	0.007	0.009	0.010	...
0.109 to 0.140	0.0045	0.0045	0.005	0.007	0.009	0.010	...
0.141 to 0.172	0.006	0.006	0.008	0.009	0.011	0.012	...
0.173 to 0.203	0.007	0.007	0.009	0.011	0.013	0.015	...
0.204 to 0.249	0.009	0.009	0.011	0.013	0.015	0.017	...
0.250 to 0.320	0.013	0.013	0.013	0.015	0.017	0.020	...
0.321 to 0.438	0.019	0.019	0.019	0.019	0.023	0.026	0.026
0.439 to 0.625	0.025	0.025	0.025	0.025	0.030	0.035	0.035
0.626 to 0.875	0.030	0.030	0.030	0.030	0.037	0.045	0.045
0.876 to 1.125	0.035	0.035	0.035	0.035	0.045	0.055	0.055
1.126 to 1.375	0.040	0.040	0.040	0.040	0.052	0.065	0.065
1.376 to 1.625	0.045	0.045	0.045	0.045	0.060	0.075	0.075
1.626 to 1.875	0.052	0.052	0.052	0.052	0.070	0.088	0.088
1.876 to 2.250	0.060	0.060	0.060	0.060	0.080	0.100	0.100
2.251 to 2.750	0.075	0.075	0.075	0.075	0.100	0.125	0.125
2.751 to 3.000	0.090	0.090	0.090	0.090	0.120	0.150	...
3.001 to 4.000	0.110	0.110	0.110	0.110	0.140	0.160	0.160
4.001 to 5.000	0.125	0.125	0.125	0.125	0.150	...	...
5.001 to 6.000	0.135	0.135	0.135	0.135	0.160	...	...

[a] Intermediate thicknesses shall be rounded off to the third decimal place in accordance with the Recommended Practices for Designating Significant Places in Specified Limiting Values (ASTM Designation: E 29).

TABLE V.—PERMISSIBLE VARIATIONS IN THICKNESS OF ALLOYS 5454, 5086, 5083, 5456, 5052, 5154, 6061, ALCLAD 6061, 3004, AND ALCLAD 3004, FLAT SHEET, COILED SHEET, AND PLATE, PLUS OR MINUS, IN.

Thickness, in.[a]	Width, in.											
	18 and under	Over 18 to 36	Over 36 to 48	Over 48 to 54	Over 54 to 60	Over 60 to 66	Over 66 to 72	Over 72 to 78	Over 78 to 84	Over 84 to 90	Over 90 to 96	Over 96 to 120
0.046 to 0.068	0.0025	0.003	0.004	0.005	0.006	0.006	0.006	0.007	0.007	...	...	...
0.069 to 0.076	0.003	0.003	0.004	0.005	0.006	0.006	0.006	0.007	0.007	0.012	...	...
0.077 to 0.096	0.0035	0.0035	0.004	0.005	0.006	0.006	0.006	0.007	0.007	0.012	...	...
0.097 to 0.108	0.004	0.004	0.005	0.005	0.007	0.007	0.007	0.008	0.008	0.016	0.018	0.020
0.109 to 0.125	0.0045	0.0045	0.005	0.005	0.007	0.007	0.007	0.008	0.008	0.016	0.018	0.020
0.126 to 0.140	0.0045	0.0045	0.005	0.005	0.007	0.010	0.012	0.013	0.014	0.016	0.018	0.020
0.141 to 0.172	0.006	0.006	0.008	0.008	0.009	0.012	0.014	0.015	0.016	0.017	0.019	0.023
0.173 to 0.203	0.007	0.007	0.010	0.010	0.011	0.014	0.016	0.017	0.017	0.017	0.022	0.026
0.204 to 0.249	0.009	0.009	0.011	0.011	0.013	0.016	0.018	0.018	0.018	0.018	0.024	0.028
0.250 to 0.320	0.013	0.013	0.013	0.013	0.015	0.018	0.020	0.020	0.020	0.020	0.025	0.030
0.321 to 0.438	0.019	0.019	0.019	0.019	0.020	0.020	0.023	0.023	0.025	0.025	0.026	0.033
0.439 to 0.625	0.025	0.025	0.025	0.025	0.025	0.025	0.025	0.030	0.030	0.030	0.035	0.035
0.626 to 0.875	0.030	0.030	0.030	0.030	0.030	0.030	0.030	0.037	0.037	0.037	0.045	0.045
0.876 to 1.125	0.035	0.035	0.035	0.035	0.035	0.035	0.035	0.045	0.045	0.045	0.055	0.055

TABLE V.—PERMISSIBLE VARIATIONS (*Concluded*).

Thickness, in.[a]	Width, in.											
	18 and under	Over 18 to 36	Over 36 to 48	Over 48 to 54	Over 54 to 60	Over 60 to 66	Over 66 to 72	Over 72 to 78	Over 78 to 84	Over 84 to 90	Over 90 to 96	Over 96 to 120
1.126 to 1.375	0.040	0.040	0.040	0.040	0.040	0.040	0.040	0.052	0.052	0.052	0.065	0.065
1.376 to 1.625	0.045	0.045	0.045	0.045	0.045	0.045	0.045	0.060	0.060	0.060	0.075	0.075
1.626 to 1.875	0.052	0.052	0.052	0.052	0.052	0.052	0.052	0.070	0.070	0.070	0.088	0.088
1.876 to 2.250	0.060	0.060	0.060	0.060	0.060	0.060	0.060	0.080	0.080	0.080	0.100	0.100
2.251 to 2.750	0.075	0.075	0.075	0.075	0.075	0.075	0.075	0.100	0.100	0.100	0.125	0.125
2.751 to 3.000	0.090	0.090	0.090	0.090	0.090	0.090	0.090	0.120	0.120	0.120	0.150	0.150
3.001 to 4.000	0.110	0.110	0.110	0.110	0.110	0.110	0.110	0.140	0.140	0.140	0.160	0.160
4.001 to 5.000	0.125	0.125	0.125	0.125	0.125	0.125	0.125	0.150	0.150	0.150	...	...
5.001 to 6.000	0.135	0.135	0.135	0.135	0.135	0.135	0.135	0.160	0.160	0.160	...	...

[a] Intermediate thicknesses shall be rounded off to the third decimal place in accordance with the Recommended Practices for Designating Significant Places in Specified Limiting Values (ASTM Designation: E 29).

TABLE VI.—PERMISSIBLE VARIATIONS IN WIDTH OF COILED SHEET.

Thickness, in.	Permissible Variation in Widths, Plus or Minus, in., for Widths Given in Inches				
	6 and under	Over 6 to 12	Over 12 to 24	Over 24 to 48	Over 48 to 60
0.006 to 0.125	0.010	0.016	1/32	3/64	1/16

TABLE VII.—LATERAL BOW, PERMISSIBLE VARIATION OF A SIDE EDGE OF COILED SHEET FROM A STRAIGHT LINE.

Thickness, in.	Permissible Bow, in., for Lengths Given in Inches			
	30 and under	Over 30 to 60	Over 60 to 90	Over 90 to 120
0.006 to 0.125	1/16	1/4	1/2	1

TABLE VIII.—PERMISSIBLE VARIATION IN WIDTH OF SHEARED FLAT SHEET AND PLATE.

Thickness, in.	Permissible Variation in Width, in., for Widths Given in Inches					
	4 and under	Over 4 to 18	Over 18 to 36	Over 36 to 54	Over 54 to 72	Over 72 to 132
0.006 to 0.064	±1/32	±1/16	±3/32	±1/8	±5/32	±3/16
0.065 to 0.102	±1/16	±1/16	±3/32	±1/8	±5/32	±3/16
0.103 to 0.240	±1/8	±3/32	±1/8	±3/16	±3/16	±1/4
0.250 to 0.500	...	+3/8	+3/8	+3/8	+3/8	+3/8
0.501 to 1.000	...	+1/2	+1/2	+1/2	+1/2	+1/2
1.001 to 1.250	...	+5/8	+5/8	+5/8	+5/8	+5/8

TABLE IX.—PERMISSIBLE VARIATION IN LENGTH OF SHEARED FLAT SHEET AND PLATE.

Thickness, in.	Permissible Variation in Length, in., for Lengths Given in Inches						
	18 and Under	Over 18 to 48	Over 48 to 120	Over 120 to 144	Over 144 to 180	Over 180 to 240	Over 240 to 540
0.006 to 0.249	±1/16	±3/32	±1/8	±5/32	±5/32	±1/4	±1/4
0.250 to 0.500	+3/8	+3/8	+3/8	+3/8	+7/16	+7/16	+1/2
0.501 to 1.000	+1/2	+1/2	+1/2	+1/2	+9/16	+9/16	+5/8
1.001 to 1.500	+5/8	+5/8	+5/8	+5/8	+3/4	+3/4	+1

TABLE X.—PERMISSIBLE VARIATION OF A SIDE EDGE OF FLAT SHEET FROM A STRAIGHT LINE (LATERAL BOW).

Width, in.	Thickness, in.	Permissible Bow, in., for Lengths Given in Inches								
		30 and under	Over 30 to 60	Over 60 to 90	Over 90 to 120	Over 120 to 144	Over 144 to 150	Over 150 to 180	Over 180 to 210	Over 210 to 240
Under 4	0.006 to 0.125	1/16	1/4	1/2	1	1 1/16	1 1/8	2	3	4
4 to 72	0.006 to 0.249	1/32	1/16	3/32	1/8	5/16	1 1/2	2	3	4

TABLE XI.—PERMISSIBLE VARIATION IN WIDTH AND LENGTH OF SAWED FLAT PLATE.

Thickness, in.	Permissible Variation for Width and Length, plus and minus, in., for Widths Given in Inches			
	10 and under	Over 10 to 48	Over 48 to 84	Over 84 to 132
0.250 to 6.000	3/32	3/16	1/4	5/16

TABLE XII.—PERMISSIBLE VARIATION FROM FLAT.

Longitudinal Flatness

Thickness, in.	Tolerances, in.[a]
0.250 to 6.000	1/4 in any 6 feet or less

Transverse Flatness[a]

Thickness, in.	Permissible Variations from Flat for Indicated Width, in.		
	Up through 24	Over 24 to 48	Over 48 to 72
0.250 to 0.624	0.125	3/4	1 1/2
0.625 to 1.500	0.090	1/4	5/16[b]
1.501 to 3.000	0.090	5/16	1/4[b]

Short Cycle Flatness[c]

Thickness, in.	Tolerance, in.[d]
0.250 to 0.624	0.125 in any 2 feet
0.625 to 3.000	0.090 in any 2 feet

[a] As measured with the plate resting on a flat surface. Concave side upward, using a 6 ft long straightedge and a feeler gage, dial gage, or scale.

[b] Also applicable to any 72-in. width increment of wider plate.

[c] Short cycle flatness is the flatness over any 2-ft span in any direction.

[d] As measured with the plate resting on a flat surface, and by use of a frame with rollers mounted on 2-ft centers and a depth gage in the center.

TABLE II.—TENSILE REQUIREMENTS (*Concluded*)

Temper	Thickness, in.	Tensile Strength, psi		Yield Strength (0.2 per cent offset), psi		Elongation in 2 in., or 4 x Diam., minimum per cent	Bend Diameter Factor, *N*
		Minimum	Maximum	Minimum	Maximum		
Alloy Alclad 6061							
T4	0.051 to 0.249	27 000	....	14 000	....	16	..
	0.250 to 0.499	27 000	....	14 000	....	18	..
	0.500 to 3.000	30 000[/]	....	16 000[/]	....	18	..
T6	0.051 to 0.499	38 000	....	32 000	....	10	..
	0.500 to 1.000	42 000[/]	....	35 000[/]	....	9	..
	1.001 to 2.000	42 000[/]	....	35 000[/]	....	8	..
	2.001 to 3.000	42 000[/]	....	35 000[/]	....	6	..

[/] The tension test specimen from plate 0.500 in. and thicker is machined from the core and does not include the cladding alloy.

TABLE III.—THICKNESS REQUIREMENTS OF CLADDING.

Alloy	Total Composite Thickness of Finished Sheet, in.	Minimum Thickness of Cladding, in.[a]
Alclad 3003	all	0.10 *T*
Alclad 3004	all	0.05 *T*
Alclad 6061	all	0.05 *T*

[a] *T* is the total composite thickness in inches.

TABLE IV.—PERMISSIBLE VARIATIONS IN THICKNESS OF ALLOYS 1100, 1060, 5050, 3003, AND ALCLAD 3003 FLAT SHEET, COILED SHEET, AND PLATE, PLUS OR MINUS, IN.

Thickness, in.[a]	Width, in.						
	18 and under	Over 18 to 36	Over 36 to 54	Over 54 to 72	Over 72 to 90	Over 90 to 102	Over 102 to 132
0.046 to 0.068	0.0025	0.003	0.004	0.005	0.006	...	...
0.069 to 0.076	0.0025	0.003	0.004	0.006	0.008	...	...
0.077 to 0.096	0.003	0.003	0.004	0.006	0.008	...	...
0.097 to 0.108	0.0035	0.004	0.005	0.007	0.009	0.010	...
0.109 to 0.140	0.0045	0.0045	0.005	0.007	0.009	0.010	...
0.141 to 0.172	0.006	0.006	0.008	0.009	0.011	0.012	...
0.173 to 0.203	0.007	0.007	0.009	0.011	0.013	0.015	...
0.204 to 0.249	0.009	0.009	0.011	0.013	0.015	0.017	...
0.250 to 0.320	0.013	0.013	0.013	0.015	0.017	0.020	...
0.321 to 0.438	0.019	0.019	0.019	0.019	0.023	0.026	0.026
0.439 to 0.625	0.025	0.025	0.025	0.025	0.030	0.035	0.035
0.626 to 0.875	0.030	0.030	0.030	0.030	0.037	0.045	0.045
0.876 to 1.125	0.035	0.035	0.035	0.035	0.045	0.055	0.055
1.126 to 1.375	0.040	0.040	0.040	0.040	0.052	0.065	0.065
1.376 to 1.625	0.045	0.045	0.045	0.045	0.060	0.075	0.075
1.626 to 1.875	0.052	0.052	0.052	0.052	0.070	0.088	0.088
1.876 to 2.250	0.060	0.060	0.060	0.060	0.080	0.100	0.100
2.251 to 2.750	0.075	0.075	0.075	0.075	0.100	0.125	0.125
2.751 to 3.000	0.090	0.090	0.090	0.090	0.120	0.150	...
3.001 to 4.000	0.110	0.110	0.110	0.110	0.140	0.160	0.160
4.001 to 5.000	0.125	0.125	0.125	0.125	0.150	...	...
5.001 to 6.000	0.135	0.135	0.135	0.135	0.160	...	...

[a] Intermediate thicknesses shall be rounded off to the third decimal place in accordance with the Recommended Practices for Designating Significant Places in Specified Limiting Values (ASTM Designation: E 29).

TABLE V.—PERMISSIBLE VARIATIONS IN THICKNESS OF ALLOYS 5454, 5086, 5083, 5456, 5052, 5154, 6061, ALCLAD 6061, 3004, AND ALCLAD 3004, FLAT SHEET, COILED SHEET, AND PLATE, PLUS OR MINUS, IN.

Thickness, in.[a]	Width, in.												
	18 and under	Over 18 to 36	Over 36 to 48	Over 48 to 54	Over 54 to 60	Over 60 to 66	Over 66 to 72	Over 72 to 78	Over 78 to 84	Over 84 to 90	Over 90 to 96	Over 96 to 120
0.040 to 0.068	0.0025	0.003	0.004	0.005	0.006	0.006	0.006	0.007	0.007	...	...	...
0.069 to 0.076	0.003	0.003	0.004	0.005	0.006	0.006	0.006	0.007	0.007	0.012	...	...
0.077 to 0.096	0.0035	0.0035	0.004	0.005	0.006	0.006	0.006	0.007	0.007	0.012	...	...
0.097 to 0.108	0.004	0.004	0.005	0.005	0.007	0.007	0.007	0.008	0.008	0.016	0.018	0.020
0.109 to 0.125	0.0045	0.0045	0.005	0.005	0.007	0.007	0.007	0.008	0.008	0.016	0.018	0.020
0.126 to 0.140	0.0045	0.0045	0.005	0.005	0.007	0.010	0.012	0.013	0.014	0.016	0 018	0.020
0.141 to 0.172	0.006	0.006	0.008	0.008	0.009	0.012	0.014	0.015	0.016	0.017	0.019	0.023
0.173 to 0.203	0.007	0.007	0.010	0.010	0.011	0.014	0.016	0.017	0.017	0.017	0.022	0.026
0.204 to 0.249	0.009	0.009	0.011	0.011	0.013	0.016	0.018	0.018	0.018	0.018	0.024	0.028
0.250 to 0.320	0.013	0.013	0.013	0.013	0.015	0.018	0.020	0.020	0.020	0.020	0.025	0.030
0.321 to 0.438	0.019	0.019	0.019	0.019	0.020	0.020	0.023	0.023	0.025	0.025	0.026	0.033
0.439 to 0.625	0.025	0.025	0.025	0.025	0.025	0.025	0.025	0.030	0.030	0.030	0.035	0.035
0.626 to 0.875	0.030	0.030	0.030	0.030	0.030	0.030	0.030	0.037	0.037	0.037	0.045	0.045
0.876 to 1.125	0.035	0.035	0.035	0.035	0.035	0.035	0.035	0.045	0.045	0.045	0.055	0.055

TABLE V.—PERMISSIBLE VARIATIONS (*Concluded*).

Thickness, in.[a]	Width, in.											
	18 and under	Over 18 to 36	Over 36 to 48	Over 48 to 54	Over 54 to 60	Over 60 to 66	Over 66 to 72	Over 72 to 78	Over 78 to 84	Over 84 to 90	Over 90 to 96	Over 96 to 120
1.126 to 1.375	0.040	0.040	0.040	0.040	0.040	0.040	0.040	0.052	0.052	0.052	0.065	0.065
1.376 to 1.625	0.045	0.045	0.045	0.045	0.045	0.045	0.045	0.060	0.060	0.060	0.075	0.075
1.626 to 1.875	0.052	0.052	0.052	0.052	0.052	0.052	0.052	0.070	0.070	0.070	0.088	0.088
1.876 to 2.250	0.060	0.060	0.060	0.060	0.060	0.060	0.060	0.080	0.080	0.080	0.100	0.100
2.251 to 2.750	0.075	0.075	0.075	0.075	0.075	0.075	0.075	0.100	0.100	0.100	0.125	0.125
2.751 to 3.000	0.090	0.090	0.090	0.090	0.090	0.090	0.090	0.120	0.120	0.120	0.150	0.150
3.001 to 4.000	0.110	0.110	0.110	0.110	0.110	0.110	0.110	0.140	0.140	0.140	0.160	0.160
4.001 to 5.000	0.125	0.125	0.125	0.125	0.125	0.125	0.125	0.150	0.150	0.150	...	...
5.001 to 6.000	0.135	0.135	0.135	0.135	0.135	0.135	0.135	0.160	0.160	0.160	...	...

[a] Intermediate thicknesses shall be rounded off to the third decimal place in accordance with the Recommended Practices for Designating Significant Places in Specified Limiting Values (ASTM Designation: E 29).

TABLE VI.—PERMISSIBLE VARIATIONS IN WIDTH OF COILED SHEET.

Thickness, in.	Permissible Variation in Widths, Plus or Minus, in., for Widths Given in Inches				
	6 and under	Over 6 to 12	Over 12 to 24	Over 24 to 48	Over 48 to 60
0.006 to 0.125	0.010	0.016	1/32	3/64	1/16

TABLE VII.—LATERAL BOW, PERMISSIBLE VARIATION OF A SIDE EDGE OF COILED SHEET FROM A STRAIGHT LINE.

Thickness, in.	Permissible Bow, in., for Lengths Given in Inches			
	30 and under	Over 30 to 60	Over 60 to 90	Over 90 to 120
0.006 to 0.125	1/16	1/4	1/2	1

TABLE VIII.—PERMISSIBLE VARIATION IN WIDTH OF SHEARED FLAT SHEET AND PLATE.

Thickness, in.	Permissible Variation in Width, in., for Widths Given in Inches					
	4 and under	Over 4 to 18	Over 18 to 36	Over 36 to 54	Over 54 to 72	Over 72 to 132
0.006 to 0.064	±1/32	±1/16	±3/32	±1/8	±5/32	±3/16
0.065 to 0.102	±1/16	±1/16	±3/32	±1/8	±5/32	±3/16
0.103 to 0.249	±1/8	±3/32	±1/8	±3/16	±3/16	±1/4
0.250 to 0.500	...	+3/8	+3/8	+3/8	+3/8	+3/8
0.501 to 1.000	...	+1/2	+1/2	+1/2	+1/2	+1/2
1.001 to 1.250	...	+5/8	+5/8	+5/8	+5/8	+5/8

TABLE IX.—PERMISSIBLE VARIATION IN LENGTH OF SHEARED FLAT SHEET AND PLATE.

Thickness, in.	Permissible Variation in Length, in., for Lengths Given in Inches						
	18 and Under	Over 18 to 48	Over 48 to 120	Over 120 to 144	Over 144 to 180	Over 180 to 240	Over 240 to 540
0.006 to 0.249	±1/16	±3/32	±1/8	±5/32	±5/32	±1/4	±1/4
0.250 to 0.500	+3/8	+3/8	+3/8	+3/8	+7/16	+7/16	+1/2
0.501 to 1.000	+1/2	+1/2	+1/2	+1/2	+9/16	+9/16	+5/8
1.001 to 1.500	+5/8	+5/8	+5/8	+5/8	+3/4	+3/4	+1

TABLE X.—PERMISSIBLE VARIATION OF A SIDE EDGE OF FLAT SHEET FROM A STRAIGHT LINE (LATERAL BOW).

Width, in.	Thickness, in.	Permissible Bow, in., for Lengths Given in Inches								
		30 and under	Over 30 to 60	Over 60 to 90	Over 90 to 120	Over 120 to 144	Over 144 to 150	Over 150 to 180	Over 180 to 210	Over 210 to 240
Under 4	0.006 to 0.125	1/16	1/4	1/2	1	1 1/2	1 1/2	2	3	4
4 to 72	0.006 to 0.249	1/32	1/16	3/32	1/8	3/16	1 1/2	2	3	4

TABLE XI.—PERMISSIBLE VARIATION IN WIDTH AND LENGTH OF SAWED FLAT PLATE.

Thickness, in.	Permissible Variation for Width and Length, plus and minus, in., for Widths Given in Inches			
	10 and under	Over 10 to 48	Over 48 to 84	Over 84 to 132
0.250 to 6.000	3/32	3/16	1/4	5/16

TABLE XII.—PERMISSIBLE VARIATION FROM FLAT.

Longitudinal Flatness

Thickness, in.	Tolerances, in.[a]
0.250 to 6.000	1/4 in any 6 feet or less

Transverse Flatness[a]

Thickness, in.	Permissible Variations from Flat for Indicated Width, in.		
	Up through 24	Over 24 to 48	Over 48 to 72
0.250 to 0.624	0.125	3/8	1/2[b]
0.625 to 1.500	0.090	1/4	3/8[b]
1.501 to 3.000	0.090	3/16	1/4[b]

Short Cycle Flatness[c]

Thickness, in.	Tolerance, in.[d]
0.250 to 0.624	0.125 in any 2 feet
0.625 to 3.000	0.090 in any 2 feet

[a] As measured with the plate resting on a flat surface, Concave side upward, using a 6 ft long straightedge and a feeler gage, dial gage, or scale.

[b] Also applicable to any 72-in. width increment of wider plate.

[c] Short cycle flatness is the flatness over any 2-ft span in any direction.

[d] As measured with the plate resting on a flat surface, and by use of a frame with rollers mounted on 2-ft centers and a depth gage in the center.

SPECIFICATION FOR ALUMINUM-ALLOY DRAWN SEAMLESS TUBES

SB-210

(IDENTICAL WITH ASTM SPECIFICATION B 210-61 EXCEPT THAT ALLOYS 1100, 2024, 3004, 5050, 5052, 5254, 5652 AND 6062; CERTAIN TEMPERS; THE RELINQUISHMENT ON YIELD STRENGTH TESTS, AND THE PROVISION FOR OTHER THAN ROUND TUBES HAVE BEEN DELETED)

Scope

1. This specification covers aluminum-alloy drawn, seamless tubes (Note), designated as shown in Table I.

NOTE.—For tubes to be used in condensers and heat exchangers, see the Specification for Aluminum-Alloy Drawn Seamless Tubes for Condensers and Heat Exchangers (ASTM Designation: B 234); for extruded tubes see the Specification for Aluminum-Alloy Extruded Tubes (ASTM Designation: B 235); for pipe, see the Specification for Aluminum-Alloy Pipe (ASTM Designation: B 241).

Basis of Purchase

2. Orders for material under this specification shall include the following information:

(*1*) Quantity in pieces or pounds,
(*2*) Alloy (Section 4),
(*3*) Temper (Section 7),
(*4*) Cross-sectional dimensions and length,
(*5*) Whether marking for identification is required (Section 16), and
(*6*) Whether inspection is required at the manufacturer's works (Section 17(*a*)).

Manufacture

3. The materials used shall be such as to produce products that comply with the requirements as to chemical composition and physical properties prescribed in this specification.

Chemical Composition

4. The tubes shall conform to the requirements as to chemical composition prescribed in Table I.

Sampling for Chemical Analysis

5. (*a*) Samples for chemical analysis of all except clad material shall be taken in accordance with the Method of Sampling Wrought Nonferrous Metals and Alloys for Determination of Chemical Composition (ASTM Designation: E 55), except that the weight of the prepared sample may be a minimum of 75 g. A portion shall be taken to represent each 2000 lb, or less, of material of a given alloy in the shipment and a sample prepared from each portion. If agreed upon by the manufacturer and purchaser, a composite sample representing all portions taken from a given alloy in the shipment may be used for analysis in lieu of analyzing samples from each portion. If the manufacturer has made an analysis of the material during the course of manufacture, he shall not be required to sample and analyze the finished product.

(*b*) Samples for determining the chemical composition of clad tube shall be taken in the same general manner as prescribed in Paragraph (*a*), but must be processed in such a manner as to segregate the borings, turnings, or chips representing the core, and the coating and the weight of the sample representing the coating may be less than 75 g, when necessary.

NOTE.—A sample of the core alloy can be prepared by mounting a piece of the tube in a lathe and removing turnings from the outside surface until the wall thickness has been reduced to not less than 25 per cent of the original thickness. A sample of the coating alloy can be secured by boring or otherwise machining the inside surface of the tube to a depth not greater than 5 per cent of the original wall thickness.

Methods of Chemical Analysis

6. The chemical analysis shall be made in accordance with the Standard Methods for Chemical Analysis of Aluminum and Aluminum-Base Alloys (ASTM Designation E 34), or by any other approved method agreed upon by the manufacturer and the purchaser. The analysis may be made spectrochemically provided that, in case of dispute, the results secured by Methods E 34 shall be the basis for acceptance.

Tensile Properties

7. The tube shall be supplied in the alloy, temper and size specified in the contract or order and shall conform to the requirements as to tensile properties prescribed in Table II.

Test Specimens

8. Tension test specimens from round tubes 2 in. or less in outside diameter shall be of the full section of the tube unless the limitations of the testing machine preclude the use of such a specimen. For tubes of larger size, or when it is not possible to test the full section, the standard specimens shown in Fig. 7 or Fig. 8 or as specimen No. 1 of Fig. 13 of the Methods of Tension Testing of Metallic Materials (ASTM Designation: E 8) may be used. When the size of the material makes it impracticable to use any of these specimens, round specimens proportional to the standard specimen shown in Fig. 8 of Methods E 8 may be used provided that in no case shall the dimensions of the smallest specimen be less than the following:

Diameter of reduced section, in.	¼
Length of reduced section, in.	1¼
Radius of fillet, in.	¼
Diameter of end section, in.	⅜
Over all length, in.:	⅝
With threaded or shouldered ends	3
With plain cylindrical ends	4

TABLE I.—CHEMICAL REQUIREMENTS.

NOTE 1.—Where single units are shown, these indicate the maximum amounts permitted.
NOTE 2.—Analysis shall regularly be made only for the elements specified in this table. If, however, the presence of other elements is suspected, or indicated in the course of routine analysis, further analysis shall be made to determine that these elements are not present in amounts in excess of the limits specified in the last two columns of the table.
NOTE 3.—The following applies to all specified limits in this table: For purpose of acceptance or rejection, an observed value or a calculated value obtained from analysis shall be rounded off to the nearest unit in the last right-hand place of figures used in expressing the specified limit.

Alloy[a]	Aluminum, per cent	Copper, per cent	Iron, per cent	Silicon, per cent	Manganese, per cent	Magnesium, per cent	Zinc, per cent	Chromium, per cent	Titanium, per cent	Other Elements, per cent	
										Each	Total
1060	99.6 min[b]	0.05	0.35	0.25	0.03	0.03	0.05	....	0.03	0.03	....
3003	remainder	0.20	0.7	0.6	1.0 to 1.5	....	0.10	....	....	0.05	0.15
Alclad 3003											
Core 3003	remainder	0.20	0.7	0.6	1.0 to 1.5	....	0.10	....	....	0.05	0.15
Coating 7072	remainder	0.10	[d]	[d]	0.10	0.10	0.8 to 1.3	....	....	0.05	0.15
5154	remainder	0.10	[c]	[c]	0.10	3.1 to 3.9	0.20	0.15 to 0.35	0.20	0.05	0.15
6061	remainder	0.15 to 0.40	0.7	0.40 to 0.8	0.15	0.8 to 1.2	0.25	0.15 to 0.35	0.15	0.05	0.15
6063	remainder	0.10	0.35	0.20 to 0.6	0.10	0.45 to 0.9	0.10	0.10	0.10	0.05	0.15

[a] These alloy designations were established in accordance with the American Standard Alloy Designation System for Wrought Aluminum (ASA No.: H 35.1–1957).
[b] By difference.
[c] Iron plus silicon shall not exceed 0.45 per cent.
[d] Iron plus silicon shall not exceed 0.7 per cent.

Number of Tests

9. For tubes having a nominal weight of less than 1 lb per linear foot, one tension test specimen shall be taken for each shipment of 500 lb or less; for larger shipments, an additional specimen shall be taken for each 1000 lb, or fraction thereof in excess of the first 500 lb. For tubes having a nominal weight of 1 lb or more per linear foot, one tension test specimen shall be taken for each shipment of 500 ft or less; for larger shipments, an additional specimen shall be taken for each 1000 ft or fraction thereof in excess of the first 500 ft. Other procedures for selecting samples may be employed if agreed upon by the manufacturer and the purchaser.

Methods of Testing

10. The tension tests shall be made in accordance with Methods E 8.

NOTE.—The values obtained for the tensile properties covered by this specification are not seriously affected by variations in speed of testing. A considerable range of testing speed is permissible; however, the rate of stressing to the yield strength should not exceed 100,000 psi per min, and above the yield strength the movement per minute of the head under load should not exceed 0.5 in. per in. of gage length (or distance between grips for specimens not having reduced sections). Care must be exercised, especially when making yield strength determinations, that the speed of testing does not exceed the ability of the strain- and load-indicating equipment to function satisfactorily.

TABLE II.—TENSILE REQUIREMENTS.

NOTE.—For purposes of determining conformance with these specifications, each value for tensile strength and yield strength shall be rounded off to the nearest 100 psi, and each value for elongation shall be rounded off to the nearest 0.5 per cent, both in accordance with the rounding off method of the Recommended Practices for Designating Significant Places in Specified Limiting Values (ASTM Designation: E 29).

Alloy	Temper	Wall Thickness, in.	Tensile Strength, psi		Yield Strength (0.2 per cent offset), min, psi	Elongation in 2 in. or 4× Diameter, min, per cent[d]	
			Maximum	Minimum		Full-section Specimen	Cut out Specimen
1060	O	0.010 to 0.500	....	9 500	2 500	..	..
	H14	0.010 to 0.500	....	12 000	10 000	..	..
	H112	0.010 to 0.500	....	10 000	4 000	..	..
3003	O	0.010 to 0.500	19 000	14 000	5 000	..	..
	H12	0.010 to 0.500	....	17 000	12 000	..	..
	H14	0.010 to 0.500	....	20 000	17 000	..	..
	H18	0.010 to 0.500	....	27 000	24 000	..	..
Alclad 3003	O	0.010 to 0.500	....	13 000	4 500	..	..
	H14	0.010 to 0.500	....	19 000	16 000	..	..
	H18	0.010 to 0.500	....	26 000	23 000	..	..
	H112	0.050 to 0.500	....	14 500	6 000	..	..
5154	O	0.010 to 0.450	....	30 000	11 000	..	..
	H34	0.010 to 0.450	....	39 000	29 000	..	..
6061	T4	0.025 to 0.049	....	30 000	16 000	16	14
		0.050 to 0.259	....	30 000	16 000	18	16
		0.260 to 0.500	....	30 000	16 000	20	18
	T6	0.025 to 0.049	....	42 000	35 000	10	8
		0.050 to 0.259	....	42 000	35 000	12	10
		0.260 to 0.500	....	42 000	35 000	14	12
6063	T6	0.025 to 0.049	....	33 000	28 000	12	8
		0.050 to 0.259	....	33 000	28 000	14	10
		0.260 to 0.500	....	33 000	28 000	16	12

[d] Elongation of full-section and cut-out sheet-type specimens is measured in 2 in.; of cut-out round specimens, in 4 × specimen diameter.

Retests

11. If any tension specimen fails to conform to the requirements prescribed in Table II, two additional specimens shall be selected from other tubes in the lot and tested. If either of these specimens fails to conform to the applicable requirements, the material may be rejected. If, however, the failure of the specimens to conform with the requirements is the result of an inadequate thermal treatment, the material may be reannealed or reheat-treated, as applicable, and resampled in accordance with Section 9. Only one such reworking of the material shall be permitted.

Cladding Thickness

12. (*a*) The aluminum alloy coating of clad tube shall comprise the inside surface (only) and its thickness shall be approximately 10 per cent of the total wall thickness of the tube.

TABLE III. — PERMISSIBLE VARIATIONS IN DIAMETER (APPLIES TO OUTSIDE DIAMETER UNLESS OTHERWISE SPECIFIED).

Nominal Diameter, in.	Permissible Variations in Diameter, plus or minus, in.		
	Mean Diameter[a] or Pi-Tape Measurement—	Individual Measurement of Diameter (Out-of-Roundness) Except Soft or Thin Wall Tubes[b]	
	Alloys 1050, 3003, alclad 3003, 5154, 6061, and 6063.	Alloys 1060, 3003, alclad 3003, and 5154.	Alloys 6061, and 6063.
⅛ to ½, incl.	0.003	0.003	0.006
Over ½ to 1, incl.	0.004	0.004	0.008
Over 1 to 2, incl.	0.005	0.005	0.010
Over 2 to 3, incl.	0.006	0.006	0.012
Over 3 to 5, incl.	0.008	0.008	0.016
Over 5 to 6, incl.	0.010	0.010	0.020
Over 6 to 8, incl.	0.015	0.015	0.030
Over 8 to 10, incl.	0.020	0.020	0.040
Over 10 to 12, incl.	0.025	0.025	0.050

[a] Mean diameter is the average of any two measurements of diameter taken at right angles to each other at any point along the length of the tube.

[b] Thin wall tubes, that is, tubes having a wall thickness less than 2.5 per cent of the diameter or less than 0.020 in., and tubes in the soft temper shall be commercially round. The deviations of individual measurements from the nominal will vary with the alloy and the ratio of wall thickness to diameter.

(*b*) When the thickness of the coating is to be determined on finished tube, transverse cross-sections of at least three tubes from the lot shall be polished for microscopic examination. Using a magnification of 100 diameters, the coating thickness at four points, 90 deg apart, in each sample shall be measured and the average of the 12 measurements shall be taken as the thickness. In the case of tube having a diameter larger than can properly be mounted for polishing and examination, the portions of the cross-section polished for examination may consist of an arc about ¼ in. in length.

TABLE IV.—PERMISSIBLE VARIATIONS IN WALL THICKNESS.

Nominal Wall Thickness, in.[a]	Permissible Variations in Wall Thickness, plus or minus, in. Mean[b] Permissible Variation in Individual Measurement from Specified Wall Thickness		
	Alloys 1060, 3003, alclad 3003, 5154, 6061, and 6063.	Alloys 1060, 3003, alclad 3003, and 5154 Round Tube only.	Alloys 6061, and 6063 Round Tube only.
0.010 to 0.035	0.002	0.002	10 per cent of nominal wall thickness, but not less than ±0.003 in.
0.036 to 0.049	0.003	0.003	
0.050 to 0.083	0.004	0.004	
0.084 to 0.120	0.005	0.006	
0.121 to 0.203	0.006	0.008	
0.204 to 0.300	0.008	0.012	
0.301 to 0.375	0.015	0.020	
0.376 to 0.500	0.020	0.030	

[a] Intermediate wall thicknesses shall be rounded off to the third decimal place in accordance with Recommended Practice for Designating Significant Places in Specified Limiting Values (ASTM Designation: E 29).

[b] Mean wall thickness of round tube is the average of the two measurements of wall thickness taken at opposite sides of any diameter.

Permissible Variations in Dimensions

13. Variations from the specified or nominal dimensions shall not exceed the amounts prescribed in Tables III, IV VIII, X, and XII.

Workmanship and Finish

14. Unless otherwise agreed upon by the manufacturer and the purchaser, tubes shall be supplied in the mill finish and shall be of uniform quality and temper, clean, sound, and free from injurious defects. Grinding to remove minor surface imperfections shall not be cause for rejection.

Packing, Marking, and Shipping

15. (*a*) The material shall be packed in such a manner as to prevent damage in ordinary handling and transportation. The type of packing and gross weight of individual containers shall be left to the discretion of the manufacturer, unless otherwise agreed upon. Each package or container shall contain only one size, alloy or temper of material when packed for shipment, unless otherwise agreed upon.

(*b*) Each package or container shall be marked with the purchase order number, size of material, specification number, alloy and temper, gross and net weights, and name of the manufacturer.

(*c*) Packages or containers shall be such as to insure acceptance by common or other carriers for safe transportation at the lowest rate to the point of delivery.

TABLE VIII.—PERMISSIBLE VARIATION FROM STRAIGHT FOR ROUND TUBE.

Specified Outside Diameter in.	Permissible Deviation from Straight, in.[a, b]	
	in Each Foot of Length	in Total Length of Piece
0.374 and less	0.500	0.500[c] × length in feet
0.375 to 5.999	0.010	0.010 × length in feet
6.000 and over	0.020	0.020 × length in feet

[a] For round tube under 0.375 in. in diameter, tolerance is applicable when weight of tube on flat surface minimizes deviation.

[b] Not applicable to annealed (O temper) tube.

[c] Not applicable to lengths under 10 ft.

Marking for Identification

16. (*a*) When identification marking is specified on the purchase order, all tubes in straightened lengths ⅜ in. in diameter and larger shall be marked with the manufacturer's name or trade mark and the applicable alloy and temper designations, the latter to be in accordance with the ASA and ASTM codification systems (ASA No. H35.1—1957 and ASTM Designation: B 296). The identification characters shall have a minimum height of ⅛ in. The marking material shall be such as to resist obliteration during normal handling and shall be removable by normal cleaning methods; however, ghost images of the characters may remain. Markings shall appear at each end of each piece. Straightened material smaller than ⅜ in. diameter or across flats and all material supplied in coils shall be either tagged (in bundles if desired) or marked as individual pieces with the above information.

(*b*) The foregoing requirements are minimum; marking systems which involve added information, larger characters, and greater frequencies are acceptable under this specification.

TABLE X.—PERMISSIBLE VARIATION FROM SPECIFIED LENGTH FOR TUBE IN STRAIGHT LENGTHS.

Specified Outside Diameter, in.	Permissible Variation from Length, Plus, in.			
	Specified Length, ft			
	12 and Less	Over 12 through 30	Over 30 through 50	Over 50
0.249 and less	1/4	3/8	1/2	..
0.250 to 1.249	1/8	1/4	3/8	1
1.250 to 2.999	1/8	1/4	3/8	1
3.000 to 7.999	3/16	1/4	7/16	1
8.000 and over	1/4	3/8	1/2	1

Inspection

17. (*a*) If the purchaser desires to make an inspection of the material at the manufacturer's works where the material is made, it shall be so stated in the contract or purchase order.

(*b*) If the purchaser elects to have the inspection made at the manufacturer's works, the manufacturer shall afford the inspector representing the purchaser all reasonable facilities, without charge, to satisfy him that the material is being furnished in accordance with this specification. All tests and inspection shall be so conducted as not to interfere unnecessarily with the operation of the works.

TABLE XII.—PERMISSIBLE VARIATION FROM SQUARE OF CUT ENDS.

Specified Size	Permissible Deviation from Square, deg
All	1

Rejection

18. Material failing to conform to the requirements of this specification or in which defects are discovered during subsequent manufacturing operations, may be rejected. If material is rejected, the manufacturer's responsibility shall be limited to replacing the rejected material without charge to the purchaser. The full weight of the rejected original material shall be returned to the manufacturer.

SPECIFICATION FOR ALUMINUM-ALLOY BARS, RODS AND WIRE

SB-211

(IDENTICAL WITH ASTM SPECIFICATION B 211-61 EXCEPT THAT ALLOYS 1060, 1100, 2011, 2017, 3003, 5052, ALCLAD 5056, 5154, 5652, AND 7075; CERTAIN TEMPERS; THE RELINQUISHMENT ON YIELD STRENGTH TESTS; AND THE REQUIREMENTS FOR CLAD MATERIAL HAVE BEEN DELETED)

Scope

1. This specification covers rolled or cold-finished aluminum-alloy bars, rods, and wire, and the aluminum alloys designated in Table I.

NOTE 1.—The term "cold-finished" is used to indicate the type of surface finish, sharpness of angles, and dimensional tolerances produced by drawing through a die.

Basis of Purchase

2. Orders for material under this specification shall include the following information:

(*1*) Quantity in pieces or pounds,
(*2*) Alloy (Section 4),
(*3*) Temper (Section 7),
(*4*) Diameter for rounds, distance across flats for square-cornered squares, hexagons, or octagons, width and depth for square-cornered rectangles (orders for squares, hexagons, octagons, or rectangles with rounded corners usually require a drawing),
(*5*) Length,
(*6*) Whether marking for identification is required (Section 15), and
(*7*) Whether inspection is required at the manufacturer's works (Section 17(*a*)).

Manufacture

3. The materials used shall be such as to produce products that will comply with the requirements as to chemical composition and physical properties prescribed in this specification.

Chemical Composition

4. The bars, rods, and wire shall conform to the requirements as to chemical composition prescribed in Table I.

Sampling for Chemical Analysis

5. Samples for chemical analysis shall be taken in accordance with the Method of Sampling Wrought Nonferrous Metals and Alloys for Determination of Chemical Composition (ASTM Designation: E 55), except that the weight of the prepared sample may be a minimum of 75 g. A portion shall be taken to represent each 2000 lb or fraction thereof of material of a given alloy in the shipment, and a sample prepared from each portion. If agreed upon by the manufacturer and the purchaser, a composite sample representing all portions taken from a given alloy in the shipment may be used for the analysis in lieu of analyzing samples from each portion. If the manufacturer has made an analysis of the material during the course of manufacture, he shall not be required to sample and analyze the finished product.

Methods of Chemical Analysis

6. The chemical analysis shall be made in accordance with Methods of Chemical Analysis of Aluminum and Aluminum-Base Alloys (ASTM Designation: E 34), or by any other approved methods agreed upon by the manufacturer and the purchaser. The analysis may be made spectrochemically, provided that, in case of dispute, the results secured by Methods E 34 shall be the basis for acceptance.

Tensile Properties

7. The bars, rods, and wire shall be supplied in the alloy, temper, and size specified in the contract or order and shall conform to the requirements as to tensile properties prescribed in Table II.

Test Specimens

8. (*a*) Tension test specimens shall be the full section of the material, or specimens machined from it. Machined specimens may be the standard sheet-type specimen shown in Fig. 7 of the Methods of Tension Testing of Metallic Materials (ASTM Designation: E 8) or the standard specimen ½ in. in diameter shown in Fig. 8 of Methods E 8. If the size and shape of the material makes it impracticable to use any of these specimens, then round specimens of smaller size proportional to the standard specimen shown in Fig. 8 of Methods E 8 may be used, provided that in no case shall the dimensions of the smallest specimen be less than the following:

Diameter of reduced section, in.	¼
Length of reduced section, in.	1¼
Radius of fillet, in.	¼
Diameter of end section, in.	⅜
Over-all length, in.:	
With threaded or shouldered ends	3
With plain cylindrical ends	4

(*b*) For material 1½ in. or less in diameter or thickness, when not tested in full section, the tension test specimen shall be taken from the center of the section; for material over 1½ in. in diameter or thickness, the specimens shall be taken from midway between the center and the surface. In rectangles over 1½ in. in thickness, the specimen also shall be midway between the center and the edge. Specimens shall be taken parallel to the direction of rolling.

Number of Tests

9. For bars, rods, and wire having a nominal weight of less than 1 lb per linear foot, one tension test specimen

TABLE I.—CHEMICAL REQUIREMENTS.

Alloy	Aluminum, per cent	Copper, per cent	Iron, per cent	Silicon, per cent	Manganese, per cent	Magnesium, per cent	Zinc, per cent	Chromium, per cent	Titanium, per cent	Lead, per cent	Bismuth, per cent	Other Elements, per cent: Each	Other Elements, per cent: Total
2014	remainder	3.9 to 5.0	1.0	0.50 to 1.2	0.40 to 1.2	0.20 to 0.8	0.25	0.10	0.15	....	....	0.05	0.15
2024	remainder	3.8 to 4.9	0.50	0.50	0.30 to 0.9	1.2 to 1.8	0.25	0.10	....	....	....	0.05	0.15
6061	remainder	0.15 to 0.40	0.7	0.40 to 0.8	0.15	0.8 to 1.2	0.25	0.15 to 0.35	0.15	....	....	0.05	0.15

NOTE 1.—Where single units are shown, these indicate the maximum amounts permitted.
NOTE 2.—Analysis shall regularly be made only for the elements specifically mentioned in this table. If, however, the presence of other elements is suspected, or indicated in the course of routine analysis, further analysis shall be made to determine that these elements are not present in amounts in excess of the limits specified in the last two columns of the table.
NOTE 3.—The following applies to all specified limits in this table: For purposes of acceptance or rejection, an observed value or a calculated value obtained from analysis should be rounded off to the nearest unit in the last right-hand place of figures used in expressing the specified limit.

[a] These alloy designations were established in accordance with the American Standard Alloy Designation System for Wrought Aluminum (ASA No.: H 35.1–1957).

TABLE II.—TENSILE REQUIREMENTS.

NOTE.—For purposes of determining conformance with this specification, each value for tensile strength and yield strength shall be rounded off to the nearest 100 psi, and each value for elongation shall be rounded off to the nearest 0.5 per cent, both in accordance with the rounding off method of the Recommended Practices for Designating Significant Places in Specified Limiting Values (ASTM Designation: E 29).

Alloy	Temper	Diameter or Thickness, in.	Tensile Strength, psi: Minimum	Tensile Strength, psi: Maximum	Yield Strength (0.2 per cent offset), psi	Elongation in 2 in. or 4 × diameter, min, per cent[b]
2014	T6	0.124 and under	65 000	....	....	....
		0.125 to 6.500[c]	65 000	....	55 000 min	8
2024	T4	0.124 and under	62 000	....	....	....
		0.125 to 6.500[c]	62 000	....	40 000 min	10
6061	T6	0.124 and under[d]	42 000	....	....	....
		0.125 to 8.000	42 000	....	35 000 min	10

[c] For rounds, maximum diameter is 6.500 in.; for square, rectangular, hexagonal, or octagonal bar, maximum thickness is 4 in. and 36 sq in. maximum cross-sectional area.
[d] For bar maximum cross-sectional area is 50 sq in.
[b] The measurement of elongation is not required for wire less than 0.125 in. in thickness.

TABLE III.—PERMISSIBLE VARIATIONS IN DIMENSIONS OF ROLLED ROD, COLD-FINISHED ROD, AND WIRE.

Specified Diameter, in.	Permissible Variations in Dimensions, plus and minus, in. (except as noted): Drawn Wire	Cold-Finished Rod	Rolled Rod: Plus	Rolled Rod: Minus
Under 0.036	0.0005	...	...	...
0.036 to 0.064	0.001	...	...	...
0.065 to 0.374	0.0015	...	...	...
0.375 to 0.500	...	0.0015	...	...
0.501 to 1.000	...	0.002	...	...
1.001 to 1.500	...	0.0025	...	...
1.501 to 2.000	...	0.004	0.006	0.006
2.001 to 3.000	...	0.006	0.008	0.008
3.001 to 3.499	...	...	0.012	0.012
3.500 to 5.000	...	...	0.031	0.016
5.001 to 8.000	...	...	0.062	0.031

TABLE IV.—PERMISSIBLE VARIATIONS IN DIMENSIONS OF RECTANGULAR WIRE AND BAR.

Specified Thickness or Width, in.	Permissible Variations in Dimensions, plus and minus, in.: Drawn Wire and Cold Finished Bar: Thickness	Drawn Wire and Cold Finished Bar: Width	Rolled Bar: Thickness	Rolled Bar: Width
Under 0.036	0.001	...	...	...
0.036 to 0.064	0.0015	...	...	...
0.065 to 0.500	0.002	0.002	0.006	...
0.501 to 0.750	0.0025	0.0025	0.008	0.016
0.751 to 1.000	0.0025	0.0025	0.012	0.016
1.001 to 1.500	0.003	0.003	0.016	0.016
1.501 to 2.000	...	0.005	0.016	0.031
2.001 to 4.000	...	0.008	0.020	0.031
4.001 to 6.000	...	...	...	0.047
6.001 to 10.000	...	...	...	0.062

TABLE V.—PERMISSIBLE VARIATIONS IN DIMENSIONS OF ROLLED AND COLD-FINISHED SQUARES AND RECTANGLES.

Specified Distance Across Flats, in.	Permissible Variations in Dimensions of Square and Hexagonal Wire and Bar, plus and minus, in.: Drawn Wire	Cold-Finished Bar	Rolled Bar
Under 0.036	0.001	...	...
0.036 to 0.064	0.0015	...	...
0.065 to 0.374	0.002	....	...
0.375 to 0.500	....	0.002	...
0.501 to 1.000	....	...	...
1.001 to 1.500	....	0.003	...
1.501 to 2.000	....	0.005	0.016
2.001 to 3.000	....	0.008	0.020
3.001 to 4.000	....	...	0.020

TABLE VI.—PERMISSIBLE VARIATIONS IN DIMENSIONS OF ROUGH-ROLLED ROUND-CORNERED SQUARE AND RECTANGULAR BAR.

Specified Thickness, in.	Permissible Variation in Dimensions, plus and minus, in.	Specified Width, in.	Permissible Variation in Dimensions, plus and minus, in.
2.000 to 8.000	1/16	4.000 to 16.000	¼

shall be taken for each shipment of 500 lb or less; for larger shipments, an additional specimen shall be taken for each 1000 lb or fraction thereof, in excess of the first 500 lb. For bars and rods having a nominal weight of 1 lb or more per

TABLE VII.—PERMISSIBLE VARIATIONS FROM SPECIFIED SPECIFIC OR MULTIPLE LENGTH OF ROLLED OR COLD-FINISHED RODS, BAR, AND WIRE.

Diameter, Thickness or Distance Across Flats, in.	Permissible Variation in Length, plus, in.			
	Specified Length, ft			
	12 and under	Over 12 to 30	Over 30 to 50	Over 50
2.999 and under	1/16	1/4	3/8	1
3.000 to 7.999	3/16	3/16	7/16	1
8.000 and over	1/4	3/8	1/2	1

TABLE VIII.—PERMISSIBLE VARIATION FROM SQUARENESS OF CUT ENDS OF ROLLED OR COLD-FINISHED RODS AND BAR.

Allowable deviation from square.....1 deg

TABLE IX.—PERMISSIBLE DEGREES OF TWIST.

Circumscribing Circle Diameter[a] (Shapes); Specified Width or Depth, Whichever Greater (Bar), in.	Permissible Variation From Straight, deg	
	In Each Foot of Length	In Total Length of Piece
Under 1.500	1½	1 × length in feet
1.500 to 2.999	1	½ × length in feet, 5 max
3.000 and over	½	¼ × length in feet, 3 max

[a] Diameter of smallest circle that will completely enclose the shape.

TABLE XI.—PERMISSIBLE VARIATIONS FROM STRAIGHTNESS OF ROLLED OR COLD-FINISHED ROD AND BAR.

Product	Permissible Variation, in.	
	Up Through 5 ft	Over 5 ft
Rolled	0.250	0.050 × length in feet
Drawn or Cold-Finished	0.125	0.025 × length in feet

linear foot, one tension test specimen shall be taken for each shipment of 500 ft or less; for larger shipments, an additional specimen shall be taken for each 1000 ft or fraction thereof in excess of the first 500 ft. Other procedures for selecting samples may be employed if agreed upon by the manufacturer and the purchaser.

TABLE XIII.—PERMISSIBLE VARIATION FROM FLATNESS (FLAT SURFACES).

Allowable deviation from flat: 0.004 in. per inch of width; 0.004 in. min

TABLE XIV.—PERMISSIBLE VARIATION IN ANGULARITY.

Allowable deviation from nominal angle: plus or minus 1 deg

Methods of Testing

10. The tension tests shall be made in accordance with Methods E 8.

NOTE 3.—The values obtained for the tensile properties covered by this specification are not seriously affected by variations in speed of testing. A considerable range of testing speed is permissible; however, the rate of stressing to the yield strength should not exceed 100,000 psi per min, and above the yield strength the movement per minute of the head under load should not exceed 0.5 in. per in. of gage length (or distance between grips for specimens not having reduced sections). Care must be exercised, especially when making yield strength determinations, that the speed of testing does not exceed the ability of the strain- and load-indicating equipment to function satisfactorily.

Retests

11. If any tension test specimens fails to conform to the requirements prescribed in Table II, two additional specimens shall be selected from other pieces in the lot and tested. If either of these specimens fails to conform to the applicable requirements, the material may be rejected. If, however, the failure of the specimens to conform with the requirements is the result of an inadequate thermal treatment, the material may be reannealed or reheat-treated, as applicable, and resampled in accordance with Section 9. Only one such reworking of the material shall be permitted.

Dimensional Tolerances

12. Variations from specified dimensions for the class of material ordered shall not exceed the amounts specified in Tables III, IV, V, VI, and VII as applicable. The degrees of twist, straightness, deviation from flat (flat surfaces) angularity, and squareness of cut ends shall not exceed the amounts specified in Tables VIII, IX, XI, XIII, and XIV.

Workmanship and Finish

14. Unless otherwise agreed upon by the manufacturer and the purchaser, bars, rods, and wire shall be supplied in the mill finish and shall be of uniform quality and temper, clean, sound, commercially straight, and free from injurious defects.

Marking for Identification

15. (*a*) When identification marking is specified on the purchase order, all bars, rods, and wire in straightened lengths ⅜ in. in diameter or across flats and larger shall be marked with the manufacturer's name or trade mark and the applicable alloy and temper designations, the latter to be in accordance with the ASA and ASTM codification systems (ASA No. H35.1-1957 and ASTM Designation: B 296). The identification characters shall have a minimum height of ⅛ in. The marking material shall be such as to resist obliteration during normal handling and shall be removable by normal cleaning methods; however, ghost images of the characters may remain. Markings shall appear at each end of each piece. Straightened material smaller than ⅜ in. in diameter or across flats and all material supplied in coils shall be either tagged (in bundles, if desired) or marked as individual pieces with the above information.

(*b*) The foregoing requirements are minimum; marking systems which involve added information, larger characters, and greater frequencies are acceptable under this specification.

Packing, Marking, and Shipping

16. (*a*) The material shall be packed in such a manner as to prevent damage in ordinary handling and transportation. The type of packing and gross weight of individual containers shall be left to the discretion of the manufacturer unless otherwise agreed upon. Each package or container shall contain only one size, alloy or temper of material when packed for shipment unless otherwise agreed upon.

(*b*) Each package or container shall be marked with the purchase order number, size of material, specification number, alloy and temper, the latter to be in accordance with ASA and ASTM codification systems (ASA No. H35.1-1957 and ASTM Designation: B 296), gross and net weights, and the name of the manufacturer.

(*c*) Packages or containers shall be such as to ensure acceptance by common or other carriers for safe transportation at the lowest rate to the point of delivery.

Inspection

17. (*a*) If the purchaser desires to make an inspection of the material at the manufacturer's works where the material is made, it shall be so stated in the contract or purchase order.

(*b*) If the purchaser elects to have the inspection made at the manufacturer's works, the manufacturer shall afford the inspector representing the purchaser all reasonable facilities, without charge, to satisfy him that the material is being furnished in accordance with this specification. All tests and inspection shall be so conducted as not to interfere unnecessarily with the operation of the works.

Rejection

18. Material failing to conform to the requirements of this specification or in which defects are discovered during subsequent manufacturing operations, may be rejected and, if rejected, the manufacturer's responsibility shall be limited to replacing the rejected material without charge to the purchaser. The full weight of the rejected original material shall be returned to the manufacturer.

SPECIFICATION FOR ALUMINUM-ALLOY EXTRUDED BARS, RODS, AND SHAPES

SB-221

(IDENTICAL WITH ASTM SPECIFICATION B 221-61 EXCEPT THAT ALLOYS 1100, 2014, 3003, 6062, 6063, 6351, 7075, 7079, AND 7178; CERTAIN TEMPERS; THE RELINQUISHMENT ON YIELD STRENGTH TESTS, AND SEVERAL TOLERANCE TABLES FOR SHAPES HAVE BEEN DELETED)

Scope

1. This specification covers aluminum and aluminum-alloy extruded bars, rods, and shapes designated as shown in Table I. Extruded tubes (that is, hollow shapes with a uniform wall thickness) are not included.

NOTE 1.—For extruded tubes reference should be made to the Specification for Aluminum-Alloy Extruded Tubes (ASTM Designation: B 235).

Basis of Purchase

2. Orders for material under this specification shall include the following information:

(*1*) Quantity in pieces or pounds,
(*2*) Alloy (Section 4),
(*3*) Temper (Section 7),
(*4*) Diameter (for rods), depth and width (for square-cornered bars), distance across flats (for sharp-cornered hexagonal or octagonal bars) (round-cornered bars and shapes other than bar or rod require a drawing),
(*5*) Length,
(*6*) Whether marking for identification is required (Section 14), and
(*7*) Whether inspection is required at the manufacturer's works (Section 16(*a*)).

Manufacture

3. The materials used shall be such as to produce products that will comply with the requirements as to chemical composition and physical properties prescribed in this specification.

Chemical Composition

4. The extruded bars, rods, and shapes shall conform to the requirements as to chemical composition prescribed in Table I.

Sampling for Chemical Analysis

5. Samples for chemical analysis shall be taken in accordance with the Method of Sampling Wrought Nonferrous Metals and Alloys for Determination of Chemical Composition (ASTM Designation: E 55), except that the weight of the prepared sample may be a minimum of 75 g. A portion shall be taken to represent each 2000 lb, or less, of material of a given alloy in the shipment, and a sample prepared from each portion. If agreed upon by the manufacturer and purchaser, a composite sample representing all portions taken from a given alloy in the shipment may be used for analysis in lieu of analyzing samples from each portion. If the manufacturer has made an analysis of the material during the course of manufacture, he shall not be required to sample and analyze the finished product.

Methods of Chemical Analysis

6. The chemical analysis shall be made in accordance with the Standard Methods of Chemical Analysis of Aluminum and Aluminum-Base Alloys (ASTM Designation: E 34), or by any other approved methods agreed upon by the manufacturer and the purchaser. The analysis may be made spectrochemically, provided that, in case of dispute, the results secured by Methods E 34 shall be the basis for acceptance.

Tensile Properties

7. The extruded bars, rods, and shapes shall be supplied in the alloy, temper, and size specified in the contract or order and shall conform to the requirements as to tensile properties prescribed in Table II.

Test Specimens

8. (*a*) Tension test specimens shall be the full section of the material, or specimens machined from it. Machined specimens may be the standard sheet-type specimen shown in Fig. 7 of the Methods of Tension Testing of Metallic Materials (ASTM Designation: E 8) or the standard ½-in. diameter specimen shown in Fig. 8 of Methods E 8. If the size and shape of the material make it impracticable to use any of these specimens, then round specimens of smaller size proportional to the standard specimen shown in Fig. 8 of Methods E 8 may be used, provided that in no case the dimensions of the smallest specimen shall be less than the following:

Diameter of reduced section, in.	½
Length of reduced section, in.	1¼
Radius of fillet, in.	½
Diameter of end section, in.	⅝
Over-all length, in.:	
With threaded or shouldered ends	3
With plain cylindrical ends	4

(*b*) For material 1½ in. or less in diameter or thickness, when not tested in full section, the tension test specimen shall be taken from the center of the section; for material over 1½ in. in diameter or thickness, the specimens shall be taken from midway between the center and the surface. For rectangles over 1½ in. in thickness, the specimen also shall be midway between the center and the edge. For irregular shapes, the method for obtaining specimens for rectangles shall be approximated as nearly as practicable. Specimens shall be taken parallel to the direction of extrusion.

Number of Tests

9. For extruded bars, rods, and shapes having a nominal weight of less than 1 lb per linear foot, one tension test specimen shall be taken for each shipment of 500 lb or less; for larger shipments, an additional specimen shall be taken for each 1000 lb or fraction thereof, in excess of the first 500 lb. For extruded bars, rods, and shapes having a nominal weight of 1 lb or more per linear foot, one tension test specimen shall be taken for each shipment of 500 ft or less; for larger shipments, an additional specimen shall be taken for each 1000 ft or fraction thereof in excess of the first 500 ft. Other procedures for selecting samples may be employed if agreed upon by the manufacturer and the purchaser.

Methods of Testing

10. The tension tests shall be made in accordance with Methods E 8.

NOTE 2.—The values obtained for the tensile properties covered by this specification are not seriously affected by variations in speed of testing. A considerable range of testing speed is permissible; however, the rate of stressing to the yield strength should not exceed 100,000 psi per min, and above the yield strength the movement per minute of the head under load should not exceed 0.5 in. per in. of gage length (or distance between grips for specimens not having reduced sections). Care must be exercised, especially when making yield strength determina-

TABLE I.—CHEMICAL REQUIREMENTS.

NOTE 1.—Where single units are shown, these indicate the maximum amounts permitted.
NOTE 2.—Analysis shall regularly be made only for the elements specifically mentioned in this table. If, however, the presence of other elements is suspected, or indicated in the course of routine analysis, further analysis shall be made to determine that these elements are not present in excess of the limits specified in the last two columns of the table.
NOTE 3.—The following applies to all specified limits in this table: For purposes of acceptance or rejection, an observed value or a calculated value obtained from analysis should be rounded off to the nearest unit in the last right-hand place of figures used in expressing the specified limit.

Alloy[a]	Aluminum, per cent	Copper, per cent	Iron, per cent	Silicon, per cent	Manganese, per cent	Magnesium, per cent	Zinc, per cent	Chromium, per cent	Titanium, per cent	Other Elements, per cent	
										Each	Total
2024	remainder	3.8 to 4.9	0.50	0.50	0.30 to 0.9	1.2 to 1.8	0.25	0.10	...	0.05	0.15
5083	remainder	0.10	0.40	0.40	0.30 to 1.0	4.0 to 4.9	0.25	0.05 to 0.25	0.15	0.05	0.15
5086	remainder	0.10	0.50	0.40	0.20 to 0.7	3.5 to 4.5	0.25	0.05 to 0.25	0.15	0.05	0.15
5154	remainder	0.10	[c]	[c]	0.10	3.1 to 3.9	0.20	0.15 to 0.35	0.20	0.05	0.15
5454	remainder	0.10	[d]	[d]	0.50 to 1.0	2.4 to 3.0	0.25	0.05 to 0.20	0.20	0.05	0.15
5456	remainder	0.10	[d]	[d]	0.50 to 1.0	4.7 to 5.5	0.25	0.05 to 0.20	0.20	0.05	0.15
6061	remainder	0.15 to 0.40	0.7	0.40 to 0.8	0.15	0.8 to 1.2	0.25	0.15 to 0.35	0.15	0.05	0.15

[a] These alloy designations were established in accordance with the American Standard Alloy Designation System for Wrought Aluminum (ASA No. H 35.1–1957).
[d] The permissible maximum amount of iron plus silicon shall be 0.45 per cent.
[c] The permissible maximum amount of iron plus silicon shall be 0.40 per cent.

TABLE II.—TENSILE REQUIREMENTS.

NOTE.—For purposes of determining conformance with this specification, each value for tensile strength and yield strength shall be rounded off to the nearest 100 psi, and each value for elongation shall be rounded off to the nearest 0.5 per cent, both in accordance with the rounding off method of the Recommended Practices for Designating Significant Places in Specified Limiting Values (ASTM Designation: E 29).

Alloy	Temper[a]	Thickness, in.[g]	Area, sq in.	Tensile Strength, psi		Yield Strength, (0.2 per cent offset), min, psi	Elongation in 2 in. or 4 × diameter, min, per cent[h]
				min	max		
2024	T4	Up thru 0.249	all	57 000	....	42 000	12
		0.250 to 0.749	all	60 000	....	44 000	12
		0.750 to 1.499	all	65 000	....	46 000	10
		1.500 and over	Up thru 25	70 000	....	52 000	10
		1.500 and over	Over 25 thru 32	68 000	....	48 000	8
5083	O	all	all	38 000	....	16 000	16
	H112	all	Up thru 32	40 000	....	24 000	12
5086	H112	all	all	35 000	....	18 000	12
5154	O	all	all	30 000	41 000[b]	11 000	..
	H112	all	all	30 000	....	11 000	..
5454	O	all	all	31 000	41 000[b]	12 000	14
	H112	all	all	31 000	....	12 000	12
	H311	all	all	31 000	....	16 000	8
5456	O	Up thru 5.000	Up thru 32	42 000	....	19 000	16
	H112	Up thru 5.000	Up thru 32	42 000	....	19 000	12
	H311	Up thru 5.000	Up thru 32	42 000	....	25 000	12
6061	T6	all	all	38 000	....	35 000	10

[a] For significance of temper designations see Recommended Practice for Temper Designation of Aluminum and Magnesium Alloys, Cast and Wrought (ASTM Designation: B 296).
[g] The thickness of the cross-section from which the tension test specimen is taken determines the applicable mechanical properties. For material 1½ in. or less in thickness when not tested in full section, the tension test specimen is taken from the center of the section; for material over 1½ in. in thickness, the specimen is taken midway between the center and the surface. Specimens are taken parallel to the direction of extrusion.
[b] Maximum. So specified to insure complete annealing.
[h] For material of such dimensions that a standard test specimen cannot be taken, or for material thinner than 0.062 in., the test for elongation is not required.

tions, that the speed of testing does not exceed the ability of the strain- and load-indicating equipment to function satisfactorily.

Retests

11. If any tension test specimen fails to conform to the requirements prescribed in Table II, two additional specimens shall be selected from other pieces in the lot and tested. If either of these specimens fails to conform to the applicable requirements, the material may be rejected. If, however, the failure of the specimens to conform with the requirements is the result of an inadequate thermal treatment, the material may be reannealed or reheat-treated, as applicable, and resampled in accordance with Section 9. Only one such reworking of the material shall be permitted.

Dimensional Tolerances

12. Variations from the specified dimensions for the class or type of materials ordered shall not exceed the amounts specified in Tables IV, VI, VIII, X, and XII.

Workmanship and Finish

13. Unless otherwise agreed upon by the manufacturer and the purchaser, extruded bars, rods, and shapes shall be supplied in the mill finish and shall be of uniform quality and temper, clean, sound, and free from injurious defects.

Marking for Identification

14. (*a*) When identification marking is specified on the purchase order, all bars, rods, and shapes ⅜ in. in diameter or across flats and larger shall be marked with the manufacturer's name or trade mark and the applicable alloy and temper designations, the latter to be in accordance with the ASA and ASTM codification systems (ASA No. H35.1–1957 and ASTM Designation: B 296) or the commercial systems. Identification characters shall have a minimum height of ⅛ in. The marking material shall be such as to resist obliteration during normal handling and shall be removable by normal cleaning methods; however, ghost images of the character may remain. Markings shall appear at each end of each piece. Material smaller than ⅜-in. diameter or across flats shall be either tagged (in bundles, if desired) or marked as individual pieces with the above information.

(*b*) The foregoing requirements are minimum; marking systems which involve added information, larger characters, and greater frequencies are acceptable under this specification.

Packing, Marking, and Shipping

15. (*a*) The material shall be packed in such a manner as to prevent damage in ordinary handling and transportation. The type of packing and gross weight of individual containers shall be left to the discretion of the manufacturer unless otherwise agreed upon. Each package or container shall contain only one size, alloy or temper of material when packed for shipment unless otherwise agreed upon.

(*b*) Each package or container shall be marked with the purchase order number, size of material, specification number, alloy and temper, the latter to be in accordance with the ASA and ASTM codification systems (ASA No. H35.1–1957 and ASTM Designation B 296), gross and net weights, and the name of the manufacturer.

(*c*) Packages or containers shall be such as to insure acceptance by common or other carriers for safe transportation at the lowest rate to the point of delivery.

Inspection

16. (*a*) If the purchaser desires to make an inspection of the material at the manufacturer's works where the material is made, it shall be so stated in the contract or purchase order.

(*b*) If the purchaser elects to have the inspection made at the manufacturer's works, the manufacturer shall afford the inspector representing the purchaser all reasonable facilities, without charge, to satisfy him that the material is being furnished in accordance with this specification. All tests and inspection shall be so conducted as not to interfere unnecessarily with the operation of the works.

Rejection

17. Material failing to conform to the requirements of this specification or in which defects are discovered during subsequent manufacturing operations, may be rejected and, if rejected, the manufacturer's responsibility shall be limited to replacing the rejected material without charge to the purchaser. The full weight of the rejected original material shall be returned to the manufacturer.

TABLE IV.—STRAIGHTNESS TOLERANCES EXCEPT ROD, BAR, AND SHAPES IN O TEMPER.

CIRCUMSCRIBING [c] CIRCLE DIAMETER (SHAPES); SPECIFIED DIAMETER (ROD); SPECIFIED WIDTH (BAR) Inches	MINIMUM THICKNESS Inches	TOLERANCE Q, Inches: ALLOWABLE DEVIATION FROM STRAIGHT [b] — IN EACH FOOT OF LENGTH	TOLERANCE Q, Inches: ALLOWABLE DEVIATION FROM STRAIGHT [b] — IN TOTAL LENGTH OF PIECE
Under 1.500	Under 0.095	.050	.050 × Length, ft
Under 1.500	0.095 and over	.0125	.0125 × Length, ft
1.500 and over		.0125	.0125 × Length, ft

D (max) = .050 or .0125 × L

[b] When weight of piece on flat surface minimizes deviation.
[c] The circumscribing circle diameter is the diameter of the smallest circle that will completely enclose the shape.

TABLE VI.—TWIST TOLERANCES FOR BAR AND SHAPES EXCEPT FOR O TEMPER.

CIRCUMSCRIBING [b] CIRCLE DIAMETER (SHAPES); SPECIFIED WIDTH (BAR) Inches	TOLERANCE Q, Degrees: ALLOWABLE DEVIATION FROM STRAIGHT — IN EACH FOOT OF LENGTH	TOLERANCE Q, Degrees: ALLOWABLE DEVIATION FROM STRAIGHT — IN TOTAL LENGTH OF PIECE
Under 1.500	1°	1° × Length, ft
1.500-2.999	½°	½° × Length, ft, 5° max
3.000 and over	¼°	¼° × Length, ft, 3° max

Y (max) = 1°, ½°, or ¼° × L

[b] The circumscribing circle diameter is the diameter of the smallest circle that will completely enclose the shape.

TABLE VIII.—ANGULARITY TOLERANCES EXCEPT FOR SHAPES IN O TEMPER.

MINIMUM SPECIFIED LEG THICKNESS Inches	TOLERANCE Degrees Plus and Minus: ALLOWABLE DEVIATION FROM SPECIFIED ANGLE — RATIO: DC LEG OR SURFACE LENGTH TO LEG OR METAL THICKNESS: 1 and less	Over 1
Col. 1	Col. 2	Col. 3
Under 0.188	1	2
0.188-0.749	1	1½
0.750 and over	1	1

[b] When the space between the surfaces forming an angle is all metal, values in Column 2 apply if the larger surface length to metal thickness ratio is 1 or less.
[c] When two legs are involved the one having the larger ratio determines the applicable column.

TABLE X.—LENGTH TOLERANCES.

Circumscribing Circle Diameter[a] (Shapes); Specified Diameter (Rod); Specified Width (Bar), in.	Tolerance, plus, in.: Allowable Deviation From Specified Length: Specified Length, ft — Up thru 12	Over 12 thru 30	Over 30 thru 50	Over 50
Under 3.000	1/8	1/4	3/8	1
3.000 to 7.999	5/16	5/16	7/16	1
8.000 and over	1/4	3/8	1/2	1

[a] The circumscribing circle diameter is the diameter of the smallest circle that will completely enclose the shape.

TABLE XII.—FLATNESS TOLERANCE (FLAT SURFACES) FOR SOLID SHAPES AND BAR.

D (max) = .004 in. × W

Allowable Deviation From Flat, in.: In Any In. of Width[b]	In Total Width of Piece
0.004	0.004 × width, in.

[b] Minimum tolerance for smaller width increments is 0.004 in.

SPECIFICATION FOR COPPER AND COPPER-ALLOY ARC-WELDING ELECTRODES

SB-225

(IDENTICAL WITH ASTM SPECIFICATION B 225-57T)

Scope

1. This specification covers solid and stranded bare and covered copper and copper-alloy arc-welding electrodes for use with the shielded metal-arc, inert-gas metal-arc (consumable electrode) and submerged arc welding processes.

NOTE.—This specification is not intended to cover welding rods used with the inert-gas metal-arc (nonconsumable electrode) welding process. Such welding rods are covered in the Specification for Copper and Copper-Alloy Welding Rods (ASTM Designation: B 259; AWS Designation: A 5.7).

PART I.—CLASSIFICATION AND ACCEPTANCE

Classification

2. (*a*) The electrodes are classified on the basis of chemical composition of the electrode (core wire for covered electrodes) and mechanical properties of the weld for the welding processes for which applicable.

(*b*) Any electrode classified under one classification shall not be classified under any other classification.

Manufacture

3. The electrodes may be made by any method that will yield a uniform product conforming to the requirements of this specification.

TABLE I.—CHEMICAL REQUIREMENTS.

NOTE 1.—Analysis shall be made for the elements for which specific values are shown in this table. If, however, the presence of other elements is indicated in the course of routine analysis, further analysis shall be made to determine that the total of these other elements is not present in excess of the limits specified for "total other elements" in the last column in the table.

NOTE 2.—Single values shown are maximum percentages, except where otherwise specified.

Common Name	AWS-ASTM Classification	Copper, including silver, per cent	Zinc, per cent	Tin, per cent	Manganese, per cent	Iron, per cent	Silicon, per cent	Nickel, including cobalt, per cent	Phosphorus, per cent	Aluminum, per cent	Lead, per cent	Titanium, per cent	Total Other Elements, per cent[a]
Copper	ECu	98.0 min	*	1.0	0.5	*	0.50	*	0.15	0.01*	0.02*	...	0.50
Copper-silicon (silicon bronze)	ECuSi	remainder	*	1.5[b]	1.5[b]	0.5	2.8 to 4.0	*	*	0.01*	0.02*	...	0.50
Copper-tin (phosphor bronze)	ECuSn-A	remainder	*	4.0 to 6.0	*	*	*	*	0.10 to 0.35	0.01*	0.02*	...	0.50
	ECuSn-C	remainder	*	7.0 to 9.0	*	*	*	*	0.05 to 0.35	0.01*	0.02*	...	0.50
Copper-nickel	ECuNi	remainder	*	*	1.00	0.40 to 0.70	0.50	29.0 min	...	...	0.02*	0.50	0.50
Copper-aluminum (aluminum bronze)	ECuAl-A1	remainder	0.20	...	...	...	0.10	...	...	6.0 to 9.0	0.02	...	0.50
	ECuAl-A2[c, d]	remainder	0.02	...	...	1.5	0.10	...	...	9.0 to 11.0	0.02	...	0.50
	ECuAl-B[c]	remainder	0.02	...	...	3.0 to 4.25	0.10	...	...	11.0 to 12.0	0.02	...	0.50

[a] Total other elements, including the elements marked with an asterisk (*), shall not exceed the value specified.
[b] One or both of these elements may be present within the limits specified.
[c] This electrode also available as a stranded bare electrode for the inert-gas metal-arc (consumable electrode) process.
[d] This electrode also available as a bare electrode for submerged arc welding.

TABLE II.—MECHANICAL REQUIREMENTS OF COPPER AND COPPER-ALLOY ARC-WELDING ELECTRODES TRANSVERSE TENSION TEST SPECIMENS.

AWS-ASTM Classification	Tensile Strength, min, psi
ECu	25 000
ECuSi	50 000
ECuSn-A	35 000
ECuSn-C	40 000
ECuNi	50 000
ECuAl-A1	55 000
ECuAl-A2	60 000
ECuAl-B	65 000

Acceptability

4. (*a*) Chemical composition and mechanical tests shall be performed when and as prescribed by the manufacturer.

(*b*) At the option and expense of the purchaser either or both of the foregoing tests may be used as a basis for acceptance of the electrodes.

Chemical Composition

5. The chemical composition of the electrodes (core wire for covered electrodes) shall conform to the requirements prescribed for their classification in Table I, as determined in accordance with Section 19.

Mechanical Tests

6. The following mechanical tests are prescribed to demonstrate the mechanical properties, soundness and ductility of the deposited metal obtained from the electrodes classified herein:

(*1*) A transverse-tension test to determine the mechanical properties of a joint made with the electrode being tested, and

(*2*) A guided-bend test to demonstrate the soundness and ductility of weld metal obtained from the electrode being tested.

Methods of Test

7. The prescribed tests, when conducted, shall be as specified in Sections 17 to 22, inclusive.

Mechanical Test Requirements

8. In order to be classified under this specification an electrode shall be capable of yielding the following results:

(*1*) The mechanical properties of each of the two transverse-tension test specimens shall conform to the requirements prescribed in Table II, and

(*2*) Both guided-bend test specimens, after bending, shall show no crack or other open defect exceeding $\frac{1}{8}$ in. measured in any direction. Cracks occurring on corners of a specimen during testing shall not be considered.

Retests

9. (*a*) If either transverse-tension test specimen fails, one additional test assembly shall be prepared and the two specimens from this assembly shall conform to the tensile properties prescribed in Table II.

(*b*) If either guided-bend test specimen fails, one additional test assembly shall be prepared and the two specimens removed from this assembly shall meet the prescribed requirements.

TABLE III.—STANDARD SIZES OF COPPER AND COPPER-ALLOY ELECTRODES.

AWS-ASTM Classification	Standard Sizes, Nominal Diameter, in.[a]	
	In Straight Lengths	On Coils, Rims or Spools
ECu	...	0.035, 0.045, $\frac{1}{16}$, $\frac{5}{64}$, $\frac{3}{32}$, $\frac{1}{8}$
ECuSi	$\frac{3}{32}$, $\frac{1}{8}$, $\frac{5}{32}$, $\frac{3}{16}$, $\frac{1}{4}$	0.035, 0.045, $\frac{1}{16}$, $\frac{5}{64}$, $\frac{3}{32}$, $\frac{1}{8}$
ECuSn-A and ECuSn-C	$\frac{3}{32}$, $\frac{1}{8}$, $\frac{5}{32}$, $\frac{3}{16}$, $\frac{1}{4}$	0.035, 0.045, $\frac{1}{16}$, $\frac{5}{64}$, $\frac{3}{32}$, $\frac{1}{8}$
ECuNi	$\frac{3}{32}$, $\frac{1}{8}$, $\frac{5}{32}$, $\frac{3}{16}$	0.035, 0.045, $\frac{1}{16}$
ECuAl-A1	...	0.035, 0.045, $\frac{1}{16}$, $\frac{5}{64}$, $\frac{3}{32}$, $\frac{1}{8}$
ECuAl-A2	$\frac{5}{64}$, $\frac{3}{32}$, $\frac{1}{8}$, $\frac{5}{32}$, $\frac{3}{16}$, $\frac{1}{4}$	0.035, 0.045, $\frac{1}{16}$, $\frac{5}{64}$,[b] $\frac{3}{32}$, $\frac{1}{8}$, $\frac{5}{32}$, $\frac{3}{16}$
ECuAl-B	$\frac{1}{8}$, $\frac{5}{32}$, $\frac{3}{16}$, $\frac{1}{4}$	$\frac{5}{64}$,[b] $\frac{3}{32}$, $\frac{1}{8}$, $\frac{5}{32}$, $\frac{3}{16}$

[a] The diameter of the electrode (the core wire for covered electrodes) shall not vary more than the following from the nominal:

Diameter, in.	Tolerance, ±, in.
0.035 to $\frac{1}{16}$	0.002
$\frac{5}{64}$ and larger	0.003

[b] Only standard size for stranded bare electrodes.

TABLE IV.—STANDARD LENGTHS OF COVERED COPPER AND COPPER-ALLOY ELECTRODES.

Diameter of Core Wire, in.	Standard Lengths, in.[a]
$\frac{3}{32}$	9 and 11[b]
$\frac{1}{8}$, $\frac{5}{32}$ and $\frac{3}{16}$	14
$\frac{1}{4}$, $\frac{5}{16}$ and $\frac{3}{8}$	18

[a] Lengths shall not vary more than ± $\frac{3}{16}$ in. from the nominal.
[b] For the ECuNi classification, standard lengths shall be 9 and 14 in.

Core Wire and Coverings of Covered Electrodes

10. (*a*) The covering of all sizes of covered electrodes shall be concentric to the extent that the maximum core-plus-one-covering dimension shall not exceed the minimum core-plus-one-covering dimension by more than 5 per cent. The concentricity shall be measured by any suitable means.

(*b*) The covering of covered electrodes shall be such that it is not readily damaged by ordinary handling.

(*c*) Core wire and coverings shall be free of defects that would interfere with uniform performance of the electrode.

Exposed Core of Covered Electrodes

11. (*a*) The grip end of covered electrodes shall be bare or free from covering for not less than $\frac{1}{2}$ in. nor more than $1\frac{1}{4}$ in., for making contact with the electrode holder.

(*b*) The arc end of each covered electrode shall be sufficiently bare to permit easy striking of the arc. The length of the bare portion of the arc end (measured from the end to the point where full cross-section of the covering prevails) shall not exceed the diameter of the core. However, for electrodes larger than $\frac{1}{8}$ in. the core wire shall not be exposed around more than one-half the circumference at a distance of $\frac{1}{8}$ in. or more from the arc end.

Standard Sizes and Lengths

12. (*a*) Standard sizes of electrodes shall be as shown in Table III.

(*b*) Standard lengths of covered electrodes shall be as shown in Table IV.

(*c*) Electrodes for use with the inert-gas metal-arc process shall be furnished in coils or wound on rims or spools. All rims or spools shall have only one continuous length of electrode per rim or spool.

Coil, Rim, Spool and Winding Requirements

13. (*a*) Unless otherwise specified, coils and rims shall have an inside diameter of 12 in., plus 0 and minus $\frac{1}{8}$ in., and a width of 3 in., plus $\frac{3}{16}$ and minus 0. Rims shall be of such material and thickness as to provide adequate strength and rigidity to prevent damage or distortion in normal handling or use. Rims shall be sufficiently clean and dry to maintain the cleanliness of the electrode.

(*b*) Spool dimensions shall be as shown in Fig. 1, unless otherwise specified. Spools shall be of such material and thickness as to provide adequate strength and rigidity to prevent damage or distortion in normal handling or use. Spools shall be sufficiently clean and dry to maintain the cleanliness of the electrode.

(*c*) Electrodes shall be wound so as to avoid producing kinks, waves, or sharp bends and so that it is free to unwind without restriction caused by overlapping or wedging.

Packaging

14. (*a*) Electrodes shall be suitably packaged to insure against injury during shipment or storage under normal conditions.

TABLE V.—BASE METAL FOR TRANSVERSE-TENSION AND GUIDED-BEND TEST SPECIMENS.

AWS-ASTM Classification	ASTM Base Metal Specification
ECu	B 152, type DHP, annealed or B 11, type DHP, annealed
ECuSi	B 96, alloy A, annealed
ECuSn-A	B 103, alloy A, soft
ECuSn-C	B 103, alloy C, soft
ECuNi	B 122, alloy 5, annealed, or B 171, copper-nickel alloy, annealed
ECuAl-A1	B 169, alloy C, annealed
ECuAl-A2, ECuAl-B	B 169, alloy D, annealed

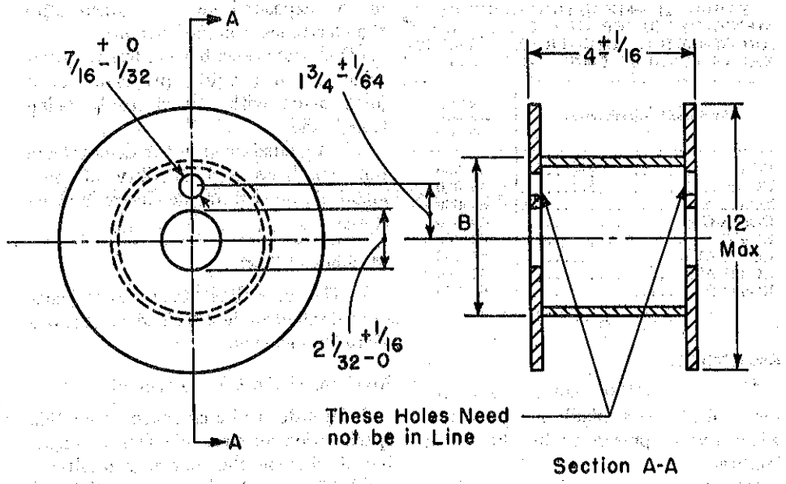

Note: All Dimensions in Inches

FIG. 1.—Standard Spool Dimensions.

(*b*) Standard size packages for covered electrodes shall be 5, 10, 25, and 50 lb net weight.

(*c*) Coils shall be 25 lb min net weight.

(*d*) At least 80 per cent of one lot of rims and spools shall be 25 lb net weight.[4] Not over 20 per cent of any one lot of rims or spools may weigh 12 to 22½ lb, net weight.

Marking

15. (*a*) All packages shall be legibly marked or tagged with the following information:

(*1*) Classification and specification number,

(*2*) Manufacturer's name and trade designation, and

(*3*) Size and net weight and, for covered electrodes, also the length.

(*b*) Covered electrodes shall be color marked in accordance with the current "Standard for Arc-Welding Electrode Identification" of the National Electrical Manufacturers Association.

(*c*) Each coil shall be flattened or tagged at both ends, showing the classification and specification number.

(*d*) Rims and at least one flange of each spool shall be legibly marked with the information required in Paragraph (*a*).

Guarantee

16. The manufacturer shall guarantee that the electrodes in all sizes and classifications conform to this specification. The manufacturer's responsibility shall be limited to replacement of any electrodes that do not conform to the requirements of this specification.

PART II.—DETAILS OF TESTS

General

17. (*a*) The tests specified in Sections 5 and 6 shall be conducted in accordance with the requirements of Sections 17 to 22, incl, of this Part II.

(*b*) Chemical analysis shall be made on electrodes of all sizes.

(*c*) Electrodes of the following sizes are to be used in making the mechanical tests: ⅛-in. diameter or larger for covered electrodes; any size for electrodes on coils, rims, or spools. Only one size electrode need be tested for any classification.

Materials for Test Plates

18. The base metal to be used for test plates shall conform to the specifications prescribed in Table V for the classification under which the electrode is to be tested.

[4] Net weights shall be within 10 per cent of the nominal weight.

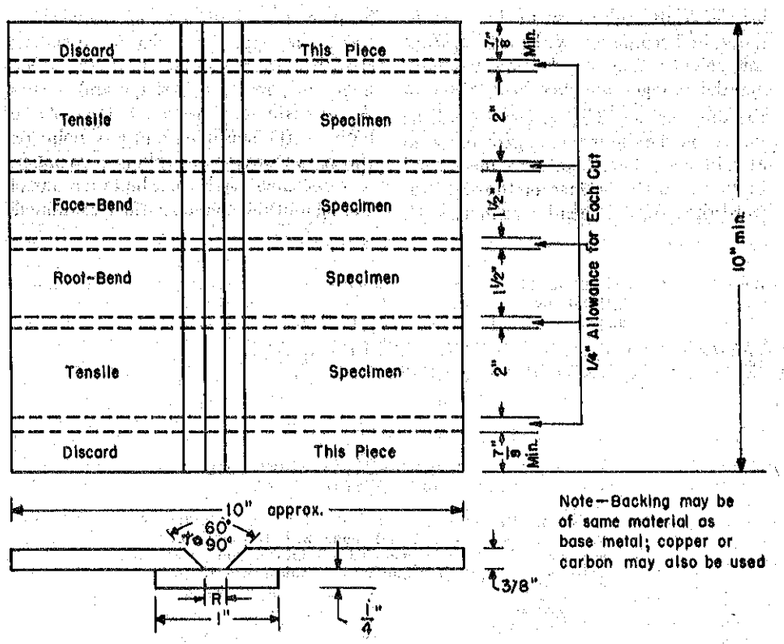

FIG. 2.—Test Assembly.

Welding Process	Backing	Root Opening *R*, in.		
		For Electrodes 1/8 in. and over in diameter	For Electrodes 1/16 in. and under in diameter	For Electrodes 5/64 in. and over in diameter
Metal-arc	Yes	3/32 to 1/4	...	...
Inert-gas metal-arc	Yes	...	3/32 to 1/8	1/8 to 5/32
Submerged-arc	Yes	...	0	0

Chemical Analysis

19. A minimum sample of 2 oz of electrode shall be used to make the prescribed chemical analysis. Chemical analysis may be made by any suitable method. Alternatively a certified casting shop analysis may be used.

TABLE VI.—TEMPERATURE RANGES OF TEST ASSEMBLIES MADE WITH SHIELDED METAL-ARC OR SUBMERGED ARC WELDING.

AWS-ASTM Classification	Test Assembly Temperature Range, deg Fahr	
	Minimum	Maximum
ECuSi	60	150
ECuSn	350	550
ECuNi	60	220
ECuAl	300	400

Test Assembly

20. (*a*) Welding of the test assembly for transverse-tension and guided-bend tests shall be done using welding techniques specified by the manufacturer of the particular electrode under test as to factors not specified herein.

(*b*) All welding shall be done in the flat position.

(*c*) The test joint shall conform to the dimensional requirements shown in Fig. 2.

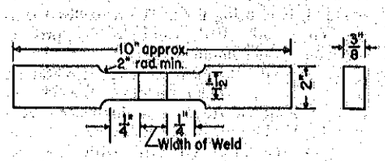

NOTE.—Weld reinforcement shall be removed flush with the base metal; undercut shall not be removed. Final machining shall be in a direction transverse to the weld.

FIG. 3.—Transverse Test Specimen.

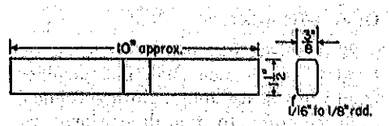

NOTE.—Weld reinforcement shall be removed flush with the base metal; undercut shall not be removed. Final machining shall be done transverse to the weld.

FIG. 4.—Guided-Bend Test Specimen.

(*d*) Test assemblies made with shielded metal-arc or submerged arc welding shall be within the temperature ranges shown in Table VI before starting to weld each pass. If, after any pass, the maximum temperature specified is exceeded, plates shall be allowed to cool in air to within the specified temperature range. Water shall not be used for cooling.

(*e*) Test assemblies made with inert-gas metal-arc welding shall be at least 60 F in temperature before starting to weld each pass.

Transverse-Tension Test

21. (*a*) Two transverse-tension test specimens shall be machined from the test assembly. Both transverse specimens shall conform to the dimensional requirements shown in Fig. 3.

(*b*) Each specimen shall be subjected to tension load until failure.

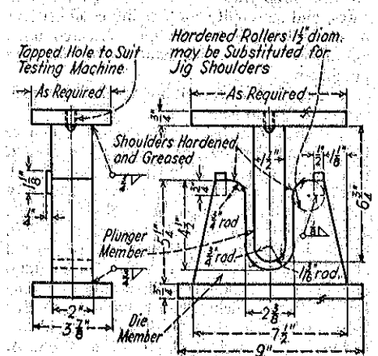

FIG. 5.—Guided-Bend Test Jig.

Guided-Bend Tests

22. (*a*) One face-bend and one root-bend test specimen shall be machined from the test assembly. Both specimens shall conform to the dimensional requirements shown in Fig. 4.

(*b*) Each specimen shall be bent in a jig having the working contour shown in Fig. 5 and otherwise made substantially in accordance with Fig. 5. Any convenient means may be used for moving the plunger member in relation to the die member. The specimen shall be placed on the die member with the weld at mid-span. Face-bend specimens shall be placed with the face of the weld toward the gap; root-bend specimens shall be placed with the root of the weld toward the gap. The two jig members shall be forced together until the specimen conforms to a U-shape and until a $\frac{1}{32}$ in. diameter wire can not be placed between the specimen and any point on the curvature of the plunger member. The specimen shall then be taken out of the jig and the convex surface examined.

APPENDIX

GUIDE TO AWS-ASTM CLASSIFICATION OF COPPER AND COPPER-ALLOY ARC-WELDING ELECTRODES

PART I.—INTRODUCTION

This guide is appended to the specification as a source of information; *it is not mandatory and does not form a part of the specification.*

The specification itself is intended to provide both the manufacturer and the purchaser of copper and copper-alloy welding electrodes with a means of production control and a basis of acceptance through mutually-acceptable, sound, standard requirements.

This guide has been prepared as an aid to prospective users of the copper and copper-alloy electrodes covered by the specification in determining which classification of electrode is best suited for a particular application, with due consideration to the particular requirements for that application.

Tests for hardness are not included in this specification. For reference, however, a chart of typical hardnesses is included as Table A of this guide. Each of the basic classification groups is discussed in the parts of this guide that follow.

It is recognized that supplementary tests may be necessary to determine the suitability of these electrodes for applications involving properties not considered in this specification. In such cases, additional tests to determine such specific properties as corrosion resistance, mechanical properties at low and high temperatures, and suitability for welding combinations of dissimilar metals may be conducted upon agreement between the manufacturer and the purchaser.

The system for identifying electrode classifications is set up as follows:

The letter *E* at the beginning of each number indicates an electrode, as distinguished from *R* for welding rods and *B* for brazing filler metal.

The chemical symbol *Cu* is used to identify the electrodes as copper-base alloys and the additional chemical symbol, as the *Si* in *ECuSi*, the *Sn* in *ECuSn*, etc., indicates the principal alloying element of each classification or group of similar classifications. Where more than one classification is included in a basic group, the individual classifications in the group are identified by the letters *A*, *B*, *C*, etc. as in ECuSn-A. Further subdividing is done by using a *1*, *2*, etc., after the last letter, as the 2 in ECuAl-A2.

TABLE A.—HARDNESS OF COPPER AND COPPER-ALLOY WELD METAL.

NOTE.—Hardness values as listed below are average values for an as-welded pad made with the electrode specified. This table is included for information only; hardness testing is not required under this specification.

AWS-ASTM Classification	Brinell Hardness
ECu	25 to 40 Rockwell F
ECuSi	80 to 100 (500-kg load)
ECuSn-A	70 to 85 (500-kg load)
ECuSn-C	85 to 100 (500-kg load)
ECuNi	60 to 80 (500-kg load)
ECuAl-A1	100 to 158[a] (3000-kg load)
ECuAl-A2	150 to 170[a] (3000-kg load)
	130 to 150[b] (3000-kg load)
ECuAl-B	140 to 180[b] (3000-kg load)

[a] With the inert-gas metal-arc (consumable electrode) process.
[b] With the shielded metal-arc process.

PART II.—COPPER ELECTRODES

ECu (Copper) Classification.—When using copper as an engineering material, it is imperative that the type of copper be plainly specified. Copper is, generally speaking, of three types: deoxidized; oxygen-free, high-conductivity; and electrolytic tough pitch. The last named type is not used generally in welding if a welded joint requiring the strength of the base metal is desired. However, where highest quality is not required, it is being used. The deoxidized coppers, on the other hand, can be welded, producing joints of maximum strength.

Since the development of inert-gas metal-arc (consumable electrode) welding, the use of covered ECu electrodes has diminished very considerably because of the higher strengths and excellent soundness obtained with inert-gas metal-arc welding.

The inert-gas metal-arc (nonconsumable electrode) welding process is generally considered suitable for joining the lighter gages of copper up to about $\frac{1}{8}$ in. in thickness.

NOTE.—For welding rods for use with this process see the Tentative Specification for Copper and Copper-Alloy Welding Rods (AWS Designation: A 5.7; ASTM Designation: B 259).

For the heavier materials inert-gas metal-arc (consumable electrode) welding is preferred. Conventional joint designs consistent with good welding practice are generally satisfactory. With inert-gas metal-arc (consumable electrode) welding, the thinner thicknesses of base metal heat up rapidly enough ahead of the arc so that an external source of preheat may not be needed. However, with greater thicknesses of metal it is essential to provide adequate preheat in the range of 400 to 600 F if high quality welds are to be obtained.

PART III.—COPPER-SILICON ELECTRODES

ECuSi (Copper-Silicon) Classification.—ECuSi electrodes are made of copper-base alloys containing approximately 3 per cent silicon; they may also contain small percentages of manganese and tin. They are used primarily for

welding copper, copper-silicon and copper-zinc (brass) base metals to themselves.

Inert-gas metal-arc (consumable electrode) welding with ECuSi electrodes is done with dc reverse polarity (electrode positive). Generally, it is best to keep the weld small to minimize hot cracking. The use of narrow string beads or narrow weld passes reduces contraction stresses and also permits faster cooling through the hot-short temperature range. The shielding gas can be either argon or helium, or a mixture of the two. A backing is normally used for material less than $\frac{3}{16}$ in. thick. Beveled joint edges are normally used on material $\frac{3}{16}$ in. and over in thickness. A 60-deg groove angle is common. If the joint is accessible from both sides, it is recommended that a double-vee groove be used for material up to about $\frac{3}{4}$ in. thick. Material over $\frac{3}{4}$ in. in thickness can be beveled to a U or vee groove. If thick material must be welded from only one side, it is recommended that a backing be used when depositing the first pass. Manual welding can be done in all positions, but the flat position is preferred, because of the ease of welding.

Inert-gas metal-arc welding has been found useful for machine welding of material about $\frac{1}{16}$ in. and over in thickness and for manual welding of material about $\frac{3}{32}$ in. and over in thickness.

Covered electrodes for shielded metal-arc welding are available and may be used for the fabrication of the silicon bronzes where it is uneconomical or impractical to use inert-gas metal-arc welding. Like most other bronze electrodes, they are occasionally used for the joining of copper, dissimilar metals, and some iron-base metals. Silicon bronze deposits are seldom used for overlaying bearing surfaces but are often used to overlay areas subjected to corrosion. The electrodes are used with dc, reverse polarity (electrode positive) and operate in a manner similar to mild steel electrodes.

PART IV.—COPPER-TIN ELECTRODES

ECuSn (Copper-Tin) Classifications.—Electrodes of classifications ECuSn-A and ECuSn-C are used for joining phosphor bronzes of similar composition and may be employed interchangeably for joining copper, brasses, bronzes, cast iron and other ferrous metals, and dissimilar metals.

The covered electrodes for shielded metal-arc welding are used extensively but there is increasing use of bare electrodes with inert-gas metal-arc (consumable electrode) welding. The covered electrodes are designed for use with dc, reverse polarity. Phosphor bronze electrodes have a tendency to flow sluggishly, requiring preheat and interpass temperatures of at least 400 F, especially on heavy sections. Postweld heat treatment may not be necessary but is desirable for maximum ductility, particularly if the weld metal is cold worked. Moisture, both on the work and in the electrode coverings, must be strictly avoided. Baking the covered electrodes at 250 to 300 F before use may be necessary.

Electrodes conforming to classification ECuSn-A are used primarily for joining plates of similar composition in the fabrication of pressure vessels and chemical processing equipment. They may also be used for welding copper if the resultant weld metal is satisfactory for the application as to electrical conductivity and corrosion resistance. Other applications include the joining of copper and copper alloys to mild steel and the braze-welding of hardenable low-alloy steels.

The higher tin content electrodes of classification ECuSn-C are particularly useful in providing weld metal of greater hardness than obtained with ECuSn-A electrodes. The ECuSn-C electrodes also provide higher tensile and yield strengths than those of the lower tin content ECuSn-A electrodes.

PART V.—COPPER-NICKEL ELECTRODES

ECuNi (Copper-Nickel) Classification.—Electrodes of the ECuNi classification are most commonly used for joining the 10 to 30 per cent copper-nickel alloys to themselves. Covered electrodes are generally used with dc, reverse polarity with a medium to short arc. Although the covered electrodes may be used in all positions, operation in the vertical position is difficult, and most welding is done in a downhand position. In general, no preheat is used because the sections joined are not heavy.

Bare electrodes are used for the inert-gas metal-arc (consumable electrode) welding of heavier sections of the copper-nickel alloys, and for welding them to nickel-copper alloys and to steel. Preheat is not normally required.

PART VI.—COPPER-ALUMINUM ELECTRODES

ECuAl (Copper-Aluminum) Classifications.—Copper-aluminum electrodes are of two types: the copper-aluminum alloy (ECuAl-A1); and the copper-aluminum-iron alloys (ECuAl-A2 and ECuAl-B).

ECuAl-A1 (iron-free) electrodes are available in coiled form only for use with inert-gas metal-arc (consumable electrode) welding; they are not available in covered form for shielded metal-arc welding. Electrodes of this classification are used primarily for the fabrication of annealed aluminum bronze plate, sheet, and strip and for the repair of castings having a similar composition. They are also used to overlay bearing and corrosion-resistant surfaces.

ECuAl-A2 (iron bearing) electrodes are available as covered electrodes for shielded metal-arc welding and bare, solid or stranded, electrodes on rims or spools for use with inert-gas metal-arc (consumable electrode) welding. They are also available as bare solid electrodes on rims or spools for submerged arc welding. These electrodes are used for joining aluminum bronzes of similar composition, high strength copper zinc alloys, silicon bronzes, manganese bronzes, some nickel alloys, many ferrous metals and alloys, and combinations of dissimilar metals. The weld metal is also suitable for overlaying bearing, wear- and corrosion-resistant surfaces.

ECuAl-B electrodes are available as covered electrodes for shielded metal-arc welding and bare, solid or stranded electrodes on rims or spools for use with inert-gas metal-arc (consumable electrode) welding. These electrodes produce a deposit having a higher tensile strength, yield strength, and hardness with a correspondingly lower ductility than electrodes of the ECuAl-A2 classification. ECuAl-B electrodes are used for joining aluminum bronze sheet and plate and for repairing castings as well as the overlay of bearing, wear- and corrosion-resistant surfaces. An excellent application for ECuAl-B electrodes is in the joining of non-ferrous metals such as silicon bronze to steel.

The principal advantage of using the ECuAl electrodes is that no brittle zone is formed at the interface between the weld metal deposits and the steel base metal, whereas in some cases where ECuSi electrodes have been used, a brittle silicon compound is formed at the interface which may fail at low values of impact.

For metal-arc welding, covered aluminum bronze electrodes of the ECuAl-A2 and ECuAl-B classifications are available for use with either ac or dc reverse polarity. The latter type electrodes are preferred for best quality welds, especially when joining plates of matching composition. The electrodes are used in the flat position only. For butt welds, a 90-deg single-vee groove is recommended for plate thicknesses up to and including $\frac{7}{16}$ in. and a modified U or double-vee groove is recommended for the heavier plate thicknesses. Preheat and interpass temperatures should be 200 to 300 F for iron-base metals, 300 to 400 F for bronzes, and 500 to 600 F for brasses.

ECuAl-A1, ECuAl-A2 and ECuAl-B bare, solid or stranded electrodes are used with the inert-gas metal-arc process with dc reverse polarity. Either argon or helium may be used although a 4 to 1 helium-argon mixture is generally recommended for best results. The solid electrodes in the $\frac{1}{16}$ and $\frac{3}{32}$ in. sizes are recommended for use in the flat position while the 0.035 and 0.045 in. sizes may be used in the vertical and overhead positions. The $\frac{5}{64}$ in. stranded electrodes may be used only in the flat position.

Usually a preheat is not required with inert-gas metal-arc welding because of the rather high welding temperatures encountered. A 90-deg single-vee groove is used for thicknesses up to and including $\frac{1}{2}$ in. while a 75-deg single- or double-vee groove is adequate in the heavier plates.

SPECIFICATION FOR ALUMINUM-ALLOY DRAWN SEAMLESS TUBES FOR CONDENSERS AND HEAT EXCHANGERS

SB-234

(IDENTICAL WITH ASTM SPECIFICATION B 234-61 EXCEPT THAT ALLOY 6062 HAS BEEN DELETED)

Scope

1. This specification covers aluminum-alloy drawn seamless tubes designated as shown in Table I, for use in surface condensers, evaporators, and heat exchangers.

Basis of Purchase

2. Orders for material under this specification shall include the following information:

(*1*) Quantity in pieces or pounds,
(*2*) Alloy (Section 4),
(*3*) Temper (Section 7),
(*4*) Outside diameter and wall thickness or inside diameter and wall thickness,
(*5*) Whether inside or outside cladding is required (Section 14, type 3003 tubes only),
(*6*) Length,
(*7*) Whether cut ends of the tube are to be deburred (Section 16 (*b*)),
(*8*) Whether marking for identification is required (Section 17), and
(*9*) Whether inspection is required at the manufacturer's works (Section 19 (*a*)).

Manufacture

3. The materials used in the manufacture of the tubing shall be such as to produce products that comply with the requirements as to chemical composition and physical properties prescribed in this specification.

Chemical Composition

4. The tubing shall conform to the requirements as to chemical composition prescribed in Table I.

Sampling for Chemical Analysis

5. (*a*) Samples for chemical analysis of alloys 1060, 3003, 5052, 5454, and 6061 shall be taken in accordance with the Method of Sampling Wrought Nonferrous Metals and Alloys for Determination of Chemical Composition (ASTM Designation: E 55), except that the weight of the prepared sample may be a minimum of 75 g. A portion shall be taken to represent each 1000 lb, or fraction thereof, of tubing of a given type in the shipment, and a sample prepared from each portion. If agreed upon by the manufacturer and the purchaser, a composite sample representing all portions taken from the shipment may be used for the analysis in lieu of analyzing samples from each portion. If the manufacturer has made an analysis of the material during the course of manufacture, he shall not be required to sample and analyze the finished product.

(*b*) Samples for determining the chemical composition of Alclad 3003 tubing shall be taken in the same general manner as prescribed in Paragraph (*a*) but must be processed in such a manner as to segregate the borings, turnings, or chips representing the core and the coating, and the weight of the sample representing the coating may be less than 75 g when necessary.

NOTE.—A sample of the core alloy can be prepared by mounting a piece of the tube in a lathe and removing turnings until the wall thickness has been reduced to not less than 25 per cent of the original thickness. A sample of the coating alloy can be secured by boring or otherwise machining the alclad surface of the tube to a depth not greater than 5 per cent of the original wall thickness.

TABLE I.—CHEMICAL REQUIREMENTS.

NOTE 1.—Where single units are shown, these indicate the maximum amounts permitted.
NOTE 2.—Analysis shall regularly be made only for the elements specifically mentioned in this table. If, however, the presence of other elements is suspected, or indicated in the course of routine analysis, further analysis shall be made to determine that these elements are not present in amounts in excess of the limits specified for "other elements" in the table.
NOTE 3.—The following applies to all specified limits in this table: For purposes of acceptance or rejection, an observed value or a calculated value obtained from analysis should be rounded off to the nearest unit in the last right-hand place of figures used in expressing the specified limit.

Alloy[a]	Aluminum, per cent	Copper, per cent	Iron, per cent	Silicon, per cent	Manganese, per cent	Magnesium, per cent	Zinc, per cent	Chromium, per cent	Titanium, per cent	Other Elements, per cent	
										Each	Total
1060	99.60 min[e]	0.05	0.35	0.25	0.03	0.03	0.05	....	0.03	0.03	....
3003	....	0.20	0.7	0.6	1.0 to 1.5	....	0.10	....	....	0.05	0.15
Alclad 3003 Core 3003	....	0.20	0.7	0.6	1.0 to 1.5	....	0.10	....	....	0.05	0.15
Coating 7072	....	0.10	[b]	[b]	0.10	0.10	0.8 to 1.3	....	....	0.05	0.15
5052	remainder	0.10	[c]	[c]	0.10	2.2 to 2.8	0.10	0.15 to 0.35	....	0.05	0.15
5454	remainder	0.10	[d]	[d]	0.50 to 1.0	2.4 to 3.0	0.25	0.05 to 0.20	0.20	0.05	0.15
6061	remainder	0.15 to 0.40	0.7	0.40 to 0.8	0.15	0.8 to 1.2	0.25	0.15 to 0.35	0.15	0.05	0.15

[a] The alloy designations were established in accordance with the American Standard Alloy Designation System for Wrought Aluminum (ASA No. H35.1-1957).
[b] Iron plus silicon shall not exceed 0.7 per cent.
[c] Iron plus silicon shall not exceed 0.45 per cent.
[d] Iron plus silicon shall not exceed 0.40 per cent.
[e] The aluminum content for unalloyed aluminum not made by a refining process is the difference between 100.00 per cent and the sum of all other metallic elements present in amounts of 0.010 per cent or more each, expressed to the second decimal.

Methods of Chemical Analysis

6. The chemical analysis shall be made in accordance with the Standard Methods for Chemical Analysis of Aluminum and Aluminum-Base Alloys (ASTM Designation: E 34), or by any other approved method agreed upon by the manufacturer and the purchaser. The analysis may be made spectrochemically, provided that, in case of dispute, the results secured by Methods E 34 shall be the basis for acceptance.

Tensile Properties

7. The tubes shall be supplied in the alloy, temper, and size specified in the contract or order and shall conform to the requirements as to tensile properties prescribed in Table II.

TABLE II.—TENSILE REQUIREMENTS.

NOTE.—For purposes of determining conformance with this specification, each value for tensile strength and yield strength shall be rounded off to the nearest 100 psi and each value for elongation shall be rounded off to the nearest 0.5 per cent, both in accordance with the rounding off method of the Recommended Practices for Designating Significant Places in Specified Limiting Values (ASTM Designation: E 29).

Alloy	Temper[b]	Wall Thickness, in.	Tensile Strength, min, psi	Yield Strength, (0.2 per cent offset) min, psi	Elongation, in 2 in. or 4 × Diam, min, per cent[a]	
					Full-Section Specimens	Cut-Out Specimens
1060	H14	0.010 to 0.500	12 000	10 000	....	....
3003	H14	0.010 to 0.200	20 000	17 000	....	....
	H25	0.010 to 0.200	22 000	19 000	....	....
Alclad 3003	H14	0.010 to 0.200	19 000	16 000	....	....
	H25	0.010 to 0.200	21 000	18 000	....	....
5052	H32	0.010 to 0.200	31 000	23 000	....	....
	H34	0.010 to 0.200	34 000	26 000	....	....
5454	H32	0.010 to 0.200	36 000	26 000	....	....
	H34	0.010 to 0.200	39 000	29 000	....	....
6061	T4	0.025 to 0.049	30 000	16 000	16	14
		0.050 to 0.249	30 000	16 000	18	16
	T6	0.025 to 0.049	42 000	35 000	10	8
		0.050 to 0.249	42 000	35 000	12	10

[a] Elongation of full-section and cut-out sheet-type specimens is measured in 2 in.; of cut-out round specimens, in 4 × specimen diameter.
[b] These temper designations were established in accordance with the Recommended Practice for Temper Designation of Light Metals and Alloys, Cast and Wrought (ASTM Designation: B 296).

Tension Test Specimens

8. Tension test specimens shall be of the full section of the tube unless the limitations of the testing machine preclude the use of such a specimen. When it is not possible to test the full section, the standard specimen shown in Fig. 7 or specimen No. 1 of Fig. 13 of the Methods of Tension Testing of Metallic Materials (ASTM Designation: E 8) may be used. When the size of the material makes it impracticable to use any of these specimens, round specimens proportional to the standard specimen shown in Fig. 8 of Methods E 8 may be used provided that in no case shall the dimensions of the smallest specimen be less than the following:

Diameter of reduced section, in.	¼
Length of reduced section, in.	1¼
Radius of fillet, in.	¼
Diameter of end section, in.	⅜
Over-all length, in.:	
With threaded or shouldered ends	3
With plain cylindrical ends	4

Number of Tension Tests

9. For tubes having a nominal weight of less than 1 lb per lineal foot, one tension test specimen shall be taken for each shipment of 500 lb or less; for larger shipments, an additional specimen shall be taken for each 1000 lb or fraction thereof, in excess of the first 500 lb. For tubes having a nominal weight of 1 lb or more per lineal foot, one tension test specimen shall be taken for each shipment of 500 ft or less; for larger shipments, an additional specimen shall be taken for each 1000 ft or fraction thereof, in excess of the first 500 ft. If a shipment includes tubes of more than one type or size, only those tubes of the same type and size shall be grouped for the purpose of selecting tension test specimens. Other procedures for selecting samples may be employed if agreed upon by the manufacturer and the purchaser.

Methods of Tension Testing

10. The tension tests shall be made in accordance with Methods E 8.

NOTE.—The values obtained for the tensile properties covered by this specification are not seriously affected by variations in speed of testing. A considerable range of testing speed is permissible; however, the rate of stressing to the yield strength should not exceed 100,000 psi per min, and above the yield strength the movement per minute of the head under load should not exceed 0.5 in. per in. of gage length (or distance between grips for specimens not having reduced sections). Care must be exercised, especially when making yield strength determinations, that the speed of testing does not exceed the ability of the strain- and load-indicating equipment to function satisfactorily.

Retests

11. If any tension test specimen fails to conform to the requirements pre-

scribed in Section 7, two additional specimens from other tubes in the lot shall be selected and tested. If either of these specimens fails to conform to the applicable requirements, the material may be rejected.

Pressure Test

12. Each length of tubing 1½ in. or less in diameter shall be subjected to an internal air pressure of 250 psi for 5 sec while immersed in water or other suitable liquid. Any evidence of leakage shall be cause for rejection.

Expansion Test

13. The tube ends shall be capable of being flared by driving a steel pin having a taper of 1½ in. per ft into the tube until the inside diameter has been increased 20 per cent. The expanded tube end shall show no cracking or rupture visible to the unaided eye.

TABLE III. — PERMISSIBLE VARIATIONS IN DIAMETER OF 6061 ALLOY TUBES.

Specified Diameter	Permissible Variation in Diameter, plus or minus, in.
0.500 and under	0.003
0.501 to 1.000, incl.	0.004
1.001 to 1.500, incl.	0.005

TABLE IV.—PERMISSIBLE VARIATIONS IN DIAMETER OF 1060, 3003, ALCLAD 3003, 5052, AND 5454 ALLOY TUBES.

Specified Diameter, in.	Permissible Variation in Diameter, plus or minus, in.
0.500 and under	0.002
0.501 to 0.749, incl.	0.0025
0.750 to 1.000, incl.	0.003
1.001 to 1.250, incl.	0.0035
1.251 to 2.000, incl.	0.004

Cladding Thickness

14. (*a*) The aluminum alloy coating of alloy Alclad 3003 tubes shall comprise either the inside surface (only) and its thickness shall be approximately 10 per cent of the total wall thickness, or the outside surface (only) in which case its thickness shall be approximately 7 per cent of the total wall thickness.

(*b*) When the thickness of the coating is to be determined on finished tubes, transverse cross-sections of at least three tubes from the lot shall be polished for microscopic examination. Using a magnification of 100 diameters, the coating thickness at four points, 90 deg apart, in each sample shall be measured and the average of the 12 measurements shall be taken as the thickness. In the case of tubes having a diameter larger than can properly be mounted for polishing and examination, the portions of the cross-section polished for examination may consist of an arc about ½ in. in length.

TABLE V.—PERMISSIBLE VARIATIONS IN WALL THICKNESS.

Specified Wall Thickness,[a] in.	Permissible Variation in Mean[b] Wall Thickness, plus only, in.	Permissible Variation in Wall Thickness at Any Point, plus only, in.
0.035	0.004	0.006
0.049	0.006	0.009
0.058	0.007	0.010
0.065	0.008	0.012
0.072	0.009	0.013
0.083	0.010	0.015
0.095	0.011	0.017
0.109	0.013	0.020
0.120	0.014	0.022
0.134	0.016	0.024
0.145	0.017	0.026
0.154	0.018	0.028
0.179	0.021	0.032
0.200	0.024	0.036

[a] If specified wall thickness is not shown, the tolerance for the next thicker wall shall be used.
[b] Mean wall thickness is the average of two measurements taken opposite each other.

Permissible Variations in Dimensions

15. (*a*) *Diameter.*—When measured by use of "go" and "no-go" ring gages, the outside diameter of 1060, 3003, alclad 3003, 5052, and 5454 alloy tubes shall not vary from that specified by more than the amounts prescribed in Table IV, and the outside diameter of tubes in alloy 6061 shall not vary from that specified by more than amounts prescribed in Table III.

TABLE VI.—PERMISSIBLE VARIATIONS IN LENGTH.

Specified Length, ft	Permissible Variation in Length, plus only, in.
15 and under	3/32
Over 15 to 20, incl.	1/8
Over 20 to 30, incl.	3/16
Over 30 to 60, incl.	1/4

TABLE VII.—PERMISSIBLE VARIATIONS FROM STRAIGHT.

Specified Diameter, in.	Permissible Variation in Each Foot of Length, in.	Permissible Variation in Total Length of Piece, in.
0.375 to 2.000, incl.	0.010	0.010 × length (ft)

(*b*) *Wall Thickness.*—No tube at its thinnest point shall be less than the thickness specified. The mean wall thickness and the wall thickness at any point shall not exceed that specified by more than the amount prescribed in Table V.

(*c*) *Length.*—The length shall be not less than that specified, when measured at a temperature of 20 C (68 F), but may be more than that specified by the amount prescribed in Table VI.

(*d*) *Straightness.*—The tubes shall not vary from straight by more than the amounts prescribed in Table VII.

Workmanship and Finish

16. (*a*) Unless otherwise agreed upon by the manufacturer and the purchaser, tubes shall be supplied in the mill finish and shall be of uniform quality and temper, clean, sound, and free from injurious defects.

(*b*) When so specified on the purchase order, the cut ends of the tubes shall be deburred by use of a wire wheel, file, or other suitable tool or device.

Marking for Identification

17. (*a*) When identification marking is specified on the purchase order, all tubes ⅜ in. in diameter and larger shall be marked with the manufacturer's name or trade mark and the applicable alloy and temper designations, the latter to be in accordance with the ASA and ASTM codification systems (ASA No. H35.1–1957 and ASTM Designation: B 296). The identification characters shall have a minimum height of ⅛ in. The marking material shall be such as to resist obliteration during normal handling and shall be removable by normal cleaning methods; however, ghost images of the characters may remain. Markings shall appear at each end of each piece. Material smaller than ⅜-in. diameter shall be either tagged (in bundles, if desired) or marked as individual pieces with the above information.

(*b*) The foregoing requirements are minimum: marking systems which involve added information, larger characters, and greater frequencies are acceptable under this specification.

Packing, Marking, and Shipping

18. (*a*) The material shall be packed in such a manner as to prevent damage in ordinary handling and transportation. The type of packing and gross weight of individual containers shall be left to the discretion of the manufacturer unless otherwise agreed upon. Each package or container shall contain only one size, alloy, or temper of material when packed for shipment unless otherwise agreed upon.

(*b*) Each package or container shall be marked with the purchase order number, size of material, specification number, alloy and temper the latter to be in accordance with ASA and ASTM codification systems (ASA No. H35.1–1957 and ASTM Designation B 296), gross and net weights, and the name of the manufacturer.

(*c*) Packages or containers shall be such as to ensure acceptance by common or other carriers for safe transportation at the lowest rate to the point of delivery.

Inspection

19. (*a*) If the purchaser desires to make an inspection of the material at the manufacturer's works where the material is made, it shall be so stated in the contract or purchase order.

(*b*) If the purchaser elects to have the inspection made at the manufacturer's works, the manufacturer shall afford the inspector representing the purchaser all reasonable facilities, without charge, to satisfy him that the material is being furnished in accordance with this specification. All tests and inspection shall be so conducted as not to interfere unnecessarily with the operation of the works.

Rejection

20. Material failing to conform to the requirements of this specification or in which defects are discovered during subsequent manufacturing operations may be rejected. If material is rejected, the manufacturer's responsibility shall be limited to replacing the rejected material without charge to the purchaser. The full weight of the rejected original material shall be returned to the manufacturer.

APPENDIX I

General Information

The following information does not constitute a part of this specification but is intended to assist in the proper selection and use of the materials.

Alloys 1060, 3003, Alclad 3003, 5052, and 5454 are supplied in a strain-hardened temper to meet the specified tensile and yield strengths. Alloy 6061 is supplied in the heat-treated temper (-T4) and in the heat-treated and aged temper (-T6). Alloy 6061 is more workable in the -T4 temper, and after forming work is completed may be subsequently aged to the stronger -T6 temper. A typical aging treatment would be to hold the material at 350 F for 6 to 10 hr in a suitable furnace and allow to cool at room temperature.

Aluminum heat-exchanger tubes are resistant to most petroleum products and a large number of organic and inorganic chemicals. Aluminum is very resistant to hydrogen sulfide and carbon dioxide. Alloy Alclad 3003 tubes are generally recommended in those heat-exchanger services where salt or fresh cooling waters within a pH range of 5 to 8 pass through the tubes. Waters with a pH outside of this range may or may not be corrosive, depending on what compounds present in the water contribute to the acidity or alkalinity.

SPECIFICATION FOR ALUMINUM-ALLOY EXTRUDED TUBES

SB-235

(IDENTICAL WITH ASTM SPECIFICATION B 235-61 EXCEPT THAT ALLOYS 1100, 2014, 2024, 3004, 5052, 5254, 5652, 6062, 6351, AND 7075; CERTAIN TEMPERS; THE RELINQUISHMENT ON YIELD STRENGTH TESTS, AND THE PROVISION FOR OTHER THAN ROUND TUBES HAVE BEEN DELETED)

Scope

1. This specification covers aluminum-alloy extruded tubes round and other than round of the alloys designated in Table I.

NOTE 1.—For drawn tubes, reference should be made to the Specification for Aluminum-Alloy Drawn Seamless Tubes (ASTM Designation: B 210).

Basis of Purchase

2. Orders for material under this specification shall include the following information:

(*1*) Quantity in pieces or pounds,
(*2*) Alloy (Section 4),
(*3*) Temper (Section 7),
(*4*) Outside diameter and wall thickness, or inside diameter and wall thickness for round tube,
(*5*) Length,
(*6*) Whether marking for identification is required (Section 15), and
(*7*) Whether inspection is required at the manufacturer's works (Section 17(*a*)).

Manufacture

3. The materials used shall be such as to produce products that will comply with the requirements as to chemical composition and physical properties prescribed in this specification.

Chemical Requirements

4. The extruded tubes shall conform to the requirements as to chemical composition prescribed in Table I.

Sampling for Chemical Analysis

5. (*a*) Samples for chemical analysis of all except clad material shall be taken in accordance with the Method of Sampling Wrought Nonferrous Metals and Alloys for Determination of Chemical Composition (ASTM Designation: E 55), except that the weight of the prepared sample may be a minimum of 75 g. A portion shall be taken to represent each 2000 lb, or less, of material of a given alloy in the shipment, and a sample prepared from each portion. If agreed upon by the manufacturer and purchaser, a composite sample representing all portions taken from a given alloy in the shipment may be used for analysis in

TABLE III.—PERMISSIBLE VARIATIONS IN DIAMETER FOR ROUND TUBES.

Specified Outside or Inside Diameter, in.[b]	Tolerance, plus and minus, in.[a]: Allowable Deviation of Mean Diameter[c] from Specified Diameter (Size) — Difference Between ½(AA + BB) and Specified Diameter		Allowable Deviation of Diameter at any Point from Specified Diameter (Ovalness)[d] — Difference Between AA and Specified Diameter	
	Alloy 5455	Other Alloys	Alloy 5456	Other Alloys
0.500 to 0.999	0.015	0.010	0.030	0.020
1.000 to 1.999	0.018	0.012	0.038	0.025
2.000 to 3.999	0.023	0.015	0.045	0.030
4.000 to 5.999	0.038	0.025	0.075	0.050
6.000 to 7.999	0.053	0.035	0.113	0.075
8.000 to 9.999	0.068	0.045	0.150	0.100
10.000 to 11.999	0.083	0.055	0.188	0.125
12.000 to 13.999	0.098	0.065	0.225	0.150
14.000 to 15.999	0.113	0.075	0.263	0.175
16.000 to 17.999	0.128	0.085	0.300	0.200

[a] When a dimension tolerance is specified other than as an equal bilateral tolerance, the value of the standard tolerance is that which would apply to the mean of the maximum and minimum dimensions permissible under the tolerance.
[b] When outside diameter, inside diameter, and wall thickness are all specified, standard tolerances are applicable to any two of these dimensions, but not to all three.
[c] Mean diameter is the average of two diameter measurements taken at right angles to each other at any point along the length.
[d] Not applicable in the annealed (O) temper or if wall thickness is less than 2½ per cent of the outside diameter or equivalent round diameter. The equivalent round diameter is the diameter of a circle having a circumference equal to the perimeter of the tube.

TABLE I.—CHEMICAL REQUIREMENTS.

NOTE 1.—Where single units are shown, these indicate the maximum amounts permitted.
NOTE 2.—Analysis shall be regularly made only for the elements specifically mentioned in this table. If, however, the presence of other elements is suspected, or indicated in the course of routine analysis, further analysis shall be made to determine that these elements are not present in excess of the limits specified in the last two columns of the table.
NOTE 3.—The following applies to all specified limits in this table: For purpose of acceptance or rejection, an observed value or a calculated value obtained from analysis shall be rounded off to the nearest unit in the last right-hand place of figures used in expressing the specified limit.

Alloy[a]	Aluminum, per cent	Copper, per cent	Iron, per cent	Silicon, per cent	Manganese, per cent	Magnesium, per cent	Zinc, per cent	Chromium, per cent	Titanium, per cent	Other Elements, per cent: Each	Other Elements, per cent: Total
1060	99.6 min[b]	0.05	0.35	0.25	0.03	0.03	0.05	...	0.03	0.03	...
3003	remainder	0.20	0.7	0.6	1.0 to 1.5	...	0.10	...	...	0.05	0.15
Alclad											
Core 3003	remainder	0.20	0.7	0.6	1.0 to 1.5	...	0.10	...	...	0.05	0.15
Cladding 7072	remainder	0.10	[d]	[d]	0.10	0.10	0.8 to 1.3	...	...	0.05	0.15
5154	remainder	0.10	[c]	[c]	0.10	3.1 to 3.9	0.20	0.15 to 0.35	0.20	0.05	0.15
5454	remainder	0.10	[c]	[c]	0.50 to 1.0	2.4 to 3.0	0.25	0.05 to 0.20	0.20	0.05	0.15
5456	remainder	0.10	[c]	[c]	0.50 to 1.0	4.7 to 5.5	0.25	0.05 to 0.20	0.20	0.05	0.15
6061	remainder	0.15 to 0.40	0.7	0.40 to 0.8	0.15	0.8 to 1.2	0.25	0.15 to 0.35	0.15	0.05	0.15
6063	remainder	0.10	0.35	0.20 to 0.6	0.10	0.45 to 0.9	0.10	0.10	0.10	0.05	0.15

[a] These alloy designations were established in accordance with the American Standard Alloy Designation System for Wrought Aluminum (ASA No. H35.1—1957).
[b] By difference.
[c] Iron plus silicon shall not exceed 0.45 per cent.
[d] Iron plus silicon shall not exceed 0.7 per cent.
[e] Iron plus silicon shall not exceed 0.40 per cent.

TABLE II.—TENSILE REQUIREMENTS[a]

NOTE.—For purposes of determining conformance with this specification, each value for tensile strength and yield strength shall be rounded off to the nearest 100 psi, and each value for elongation shall be rounded off to the nearest 0.5 per cent, both in accordance with the rounding-off method of the Recommended Practices for Designation of Significant Places in Specified Limiting Values (ASTM Designation: E 29).

Alloy	Temper	Wall Thickness, in.	Tensile Strength, psi: max	Tensile Strength, psi: min	Yield Strength (0.2 per cent Offset), min, psi	Elongation in 2 in. or 4× Diameter, min per cent[b]
1060	O	all	....	9 500	2 500	..
	H112	all	....	10 000	4 000	..
3003	O	all	19 000	14 000	5 000	25
	H112	0.050 and over	....	14 500	6 000	..
Alclad						
3003	O	all	....	13 000	4 500	..
7072	H112	0.050 and over	....	13 500	5 500	..
5154	O	all	....	30 000	11 000	..
5454	O	0.500 and under	41 000	31 000	12 000	14
	H112	0.500 and under	....	31 000	12 000	12
	H311	0.500 and under	....	31 000	16 000	8
5456	O	all	53 000	42 000	19 000	16
	H112	all	....	42 000	19 000	12
6061	T4	all	....	26 000	16 000	16
	T6	all	....	38 000	35 000	10
6063	T42	0.500 and under	....	17 000	9 000	12
	T5	0.500 and under	....	22 000	16 000	8
	T6	0.124 and under	....	30 000	25 000	8
		0.125 to 1.000	....	30 000	25 000	10

[a] Specimens tested parallel to direction of extrusion.
[b] Elongation of full-section and cut-out sheet-type specimens is measured in 2 in.; of cut-out round specimens, in four times the specimen diameter.

lieu of analyzing samples from each portion. If the manufacturer has made an analysis of the material during the course of manufacture, he shall not be required to sample and analyze the finished product.

(*b*) Samples for determining the chemical composition of clad tube shall be taken in the same general manner as prescribed in Paragraph (*a*), but must be processed in such a manner as to segregate the borings, turnings, or chips representing the core, and the coating and the weight of the sample representing the coating may be less than 75 g, when necessary.

NOTE 2.—A sample of the core alloy can be prepared by mounting a piece of the tube in a lathe and removing turnings from the outside surface until the wall thickness has been reduced to not less than 25 per cent of the original thickness. A sample of the coating alloy can be secured by boring or otherwise machining the inside surface of the tube to a depth not greater than 5 per cent of the original wall thickness.

Methods of Chemical Analysis

6. The chemical analysis shall be made in accordance with the Standard Methods for Chemical Analysis of Aluminum and Aluminum-Base Alloys (ASTM Designation: E 34), or by any other approved method agreed upon by

TABLE V.—PERMISSIBLE VARIATIONS IN WALL THICKNESS FOR ROUND TUBES.

Specified Wall Thickness, in.[d]	Tolerance, plus and minus, in.[a,b] Allowable Deviation of Mean Wall Thickness[c] from Specified Wall Thickness — Difference Between ½ (AA + BB) and Specified Wall Thickness — Outside Diameter, in. — Under 1.250		1.250 to 2.999		3.000 to 4.999		5.000 and over	
	Alloy 5456	Other Alloys	Alloy 5456	Other Alloys	Alloy 5456	Other Alloys	Alloy 5456	Other Alloys
Under 0.047	0.009	0.006	...	...	...	...	...	...
0.047 to 0.061	0.011	0.007	0.012	0.008	0.012	0.008	0.015	0.010
0.062 to 0.077	0.012	0.008	0.012	0.008	0.014	0.009	0.018	0.012
0.078 to 0.124	0.014	0.009	0.014	0.009	0.015	0.010	0.023	0.015
0.125 to 0.249	0.014	0.009	0.014	0.009	0.020	0.013	0.030	0.020
0.250 to 0.374	0.017	0.011	0.017	0.011	0.024	0.016	0.038	0.025
0.375 to 0.499	...	...	0.023	0.015	0.032	0.021	0.053	0.035
0.500 to 0.749	...	...	0.030	0.020	0.042	0.028	0.068	0.045
0.750 to 0.999	...	...	...	...	0.053	0.035	0.083	0.055
1.000 to 1.499	...	...	...	...	0.068	0.045	0.098	0.065
1.500 to 2.000	...	...	...	...	...	...	0.113	0.075
2.001 to 2.499	...	...	...	...	...	...	0.128	0.085
2.500 to 2.999	...	...	...	...	...	...	0.143	0.095
3.000 to 3.499	...	...	...	...	...	...	0.158	0.105
3.500 to 4.000	...	...	...	...	...	...	0.173	0.115

Allowable Deviation of Wall Thickness at any Point from Mean Wall Thickness[c] (Eccentricity) — Difference Between AA and Mean Wall Thickness — All Alloys except 5456[d]

For diameters 2.000 in. and under: ±10 per cent of the mean wall thickness (±0.060 in. max, ±0.010 in. min)
For diameters over 2.000 in.: ±10 per cent of the mean wall thickness (±0.120 in. max, ±0.020 in. min)

[a] When outside diameter, inside diameter, and wall thickness are all specified, standard tolerances are applicable to any two of these dimensions, but not to all three.

[b] When a dimension tolerance is specified other than as an equal bilateral tolerance, the value of the standard tolerance is that which would apply to the mean of the maximum and minimum dimensions permissible under the tolerance.

[c] The mean wall thickness of round tube is the average of two measurements taken opposite each other.

[d] When dimensions specified are outside and inside, rather than wall thickness itself, the allowable deviation at any point (eccentricity) is ±10 per cent of the mean wall thickness: ±0.060 in. max, ±0.010 in. min. For alloy 5456, the allowable deviation at any point is ±15 per cent of the mean wall thickness: ±0.090 in. max, ±0.015 in. min.

the manufacturer and the purchaser. The analysis may be made spectrochemically provided that, in case of dispute, the results obtained by Methods E 34 shall be the basis for acceptance.

Tensile Properties

7. The extruded tubes shall be supplied in the alloy, temper, and size specified on the contract or order and shall conform to the requirements as to tensile properties prescribed in Table II.

Test Specimens

8. Tension test specimens from round tubes 2 in. or less in outside diameter shall be of the full section of the tube, unless the limitations of the testing machine preclude the use of such a specimen. For tubes of larger size, or when it is not possible to test the full section, the standard specimens shown in Fig. 7 or 8 or specimen No. 1 of Fig. 13 of the Methods of Tension Testing of Metallic Materials (ASTM Designation: E 8) may be used. When the size of the material makes it impracticable to use any of these specimens, round specimens proportional to the standard specimen shown in Fig. 8 of Methods E 8 may be used provided that in no case shall the dimensions of the smallest specimen be less than the following:

Diameter of reduced section	¼ in.
Length of reduced section	1¼ in.
Radius of fillet	¼ in.
Diameter of end section	⅝ in.
Overall length:	
With threaded or shoulder ends	3 in.
With plain cylindrical ends	4 in.

TABLE VII.—PERMISSIBLE VARIATION FROM SPECIFIED LENGTH FOR TUBE IN STRAIGHT LENGTHS.

Specified Outside Diameter, in.	Permissible Variation from Length, plus, in., Specified Length, ft: 12 and Under	Over 12 to 30, incl	Over 30 to 50, incl	Over 50
Under 0.500	...	...	...	...
0.500 to 1.249	1/16	1/4	3/8	1
1.250 to 2.999	1/8	1/4	3/8	1
3.000 to 7.999	3/16	5/16	7/16	1
8.000 and over	1/4	3/8	1/2	1

Number of Tests

9. For tubes having a nominal weight of less than 1 lb per linear foot, one tension test specimen shall be taken for each shipment of 500 lb or less; for larger shipments, an additional specimen shall be taken for each 1000 lb, or fraction thereof in excess of the first 500 lb. For tubes having a nominal weight of 1 lb or more per linear foot, one tension test specimen shall be taken for each shipment of 500 ft or less; for larger shipments, an additional specimen shall be taken for each 1000 ft or fraction thereof in excess of the first 500 ft. Other procedures for selecting samples may be employed, if agreed upon by the manufacturer and the purchaser.

Methods of Test

10. The tension tests shall be made in accordance with the Methods of Tension Testing of Metallic Materials (ASTM Designation: E 8).

TABLE IX.—PERMISSIBLE DEVIATION FROM STRAIGHT FOR ROUND TUBE.

Specified Outside Diameter or Width, inches.	Allowable Deviation from Straight[a]: In Each Foot of Length	In Total Length of Piece
0.500 to 5.999	0.010	0.010 × length, ft
6.000 and over	0.020	0.020 × length, ft

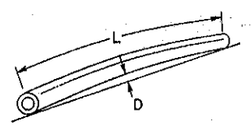

D(max) = 0.10 or.020 × L

[a] Not applicable in the annealed (O) temper.

TABLE XI.—PERMISSIBLE DEVIATION FROM SQUARENESS OF CUT ENDS.

Specified Tube Size	Permissible Deviation from Square, deg
All	1

NOTE 3.—The values obtained for the tensile properties covered by this specification are not seriously affected by variations in speed of testing. A considerable range of testing speed is permissible; however, the rate of stressing to the yield strength should not exceed 100,000 psi per min, and above the yield strength the movement per minute of the head under load should not exceed 0.5 in. per in. of gage length (or distance between grips for specimens not having reduced sections). Care must be exercised, especially when making yield strength determinations, that the speed of testing does not exceed the ability of the strain- and load-indicating equipment to function satisfactorily.

Retests

11. If any tension specimen fails to conform to the requirements prescribed in Table II, two additional specimens shall be selected from other tubes in the lot, and tested. If either of these specimens fails to conform to the applicable requirements, the material may be rejected. If, however, the failure of the specimens to conform with the requirements is the result of an inadequate thermal treatment, the material may be reannealed or reheat treated, as applicable, and resampled in accordance with Section 9. Only one such reworking of the material shall be permitted.

Cladding Thickness

12. (*a*) The aluminum alloy coating of clad tube shall comprise the inside surface (only) and its thickness shall be approximately 10 per cent of the total wall thickness of the tube.

(*b*) When the thickness of the coating is to be determined on finished tube, transverse cross-sections of at least three tubes from the lot shall be polished for microscopic examination. Using a magnification of 100 diameters, the coating thickness at four points 90 deg apart in each sample, shall be measured and the average of the 12 measurements shall be taken as the thickness. In the case of tube having a diameter larger than can properly be mounted for polishing and examination, the portions of the cross-section polished for examination may consist of an arc about ½ in. in length.

Permissible Variations in Dimensions

13. Variations from the specified dimensions for the type of material ordered shall not exceed the amounts prescribed in Tables III, V, VII, IX and XI.

Workmanship and Finish

14. Unless otherwise agreed upon by the manufacturer and the purchaser, tubes shall be supplied in the mill finish and shall be of uniform quality and temper, clean, sound, and free from injurious defects. Grinding to remove minor surface imperfections shall not be cause for rejection.

Marking

15. (*a*) When identification marking is specified on the purchase order, all tubes shall be marked with the manufacturer's name or trade mark and the applicable alloy and temper designations, the latter to be in accordance with the ASA and ASTM codification systems: American Standard Alloy Designation System for Wrought Aluminum (ASA No. H35.1—1957) and Recommended Practice for Temper Designation of Aluminum and Magnesium Alloys, Cast and Wrought (ASTM Designation: B 296). The identification characters shall have a minimum height of ⅛ in. The marking material shall be such as to resist obliteration during normal handling and shall be removable by normal cleaning methods; however, ghost images of the characters may remain. Markings shall appear at each end of each piece.

(*b*) The requirements specified in Paragraph (*a*) are minimum; marking systems which involve added information, larger characters, and greater frequencies are acceptable under this specification.

Packing, Marking, and Shipping

16. (*a*) The material shall be packed in such a manner as to prevent damage in ordinary handling and transportation. The type of packing and gross weight of individual containers shall be left to the discretion of the manufacturer, unless otherwise agreed upon. Each package or container shall contain only one size, alloy or temper of material when packed for shipment, unless otherwise agreed upon.

(*b*) Each package or container shall be marked with the purchase order number, size of material, specification number, alloy and temper, gross and net weights, and name of the manufacturer.

(*c*) Packages or containers shall be such as to insure acceptance by common or other carriers for safe transportation at the lowest rate to the point of delivery.

Inspection

17. (*a*) If the purchaser desires to make an inspection of the material at the manufacturer's works where the material is made, it shall be so stated on the contract or purchase order.

(*b*) If the purchaser elects to have the inspection made at the manufacturer's works, the manufacturer shall afford the inspector representing the purchaser all reasonable facilities, without charge, to satisfy him that the material is being furnished in accordance with this specification. All tests and inspection shall be so conducted as not to interfere unnecessarily with the operation of the works.

Rejection

18. Material failing to conform to the requirements of this specification or in which defects are discovered during subsequent manufacturing operations, may be rejected. If material is rejected, the manufacturer's responsibility shall be limited to replacing the rejected material without charge to the purchaser. The full weight of the rejected original material shall be returned to the manufacturer.

SPECIFICATION FOR ALUMINUM-ALLOY PIPE

SB-241

(IDENTICAL WITH ASTM SPECIFICATION B 241-61 EXCEPT THAT ALLOYS 5254, 6062, AND 6351, AND THE RELINQUISHMENT ON YIELD STRENGTH TESTS HAVE BEEN DELETED)

Scope

1. This specification covers schedules 5, 10, 40 (standard) and 80 (heavy) pipe, either drawn or extruded, of the aluminum alloys designated in Table I.

NOTE 1.—For drawn tubing, see the Specification for Aluminum-Alloy Drawn Seamless Tubes (ASTM Designation: B 210), and for extruded tubing see the Specification for Aluminum-Alloy Extruded Tubes (ASTM Designation: B 235).

Basis of Purchase

2. Orders for material under this specification shall include the following information:

(*1*) Quantity in pieces or pounds,
(*2*) Alloy (Section 4),
(*3*) Temper (Section 7),
(*4*) Pipe size and schedule number,
(*5*) Length,
(*6*) Whether marking for identification is required (Section 14),
(*7*) Whether inspection is required at the manufacturer's works (Section 16(*a*)),
(*8*) Plain or threaded ends (Section 13(*b*)).

Manufacture

3. The materials used shall be such as to produce products that comply with the requirements as to chemical composition and tensile properties prescribed in this specification. Pipe may be produced by either extrusion or drawing at the option of the manufacturer.

Chemical Composition

4. The pipe shall conform to the requirements as to chemical composition prescribed in Table I.

Sampling for Chemical Composition

5. Samples for chemical analysis shall be taken in accordance with the Method for Sampling Wrought Nonferrous Metals and Alloys for Determination of Chemical Composition (ASTM Designation: E 55), except that the weight of the prepared sample may be a minimum of 75 g. A portion shall be taken to represent each 2000 lb or fraction thereof of material of a given type in the shipment and a sample prepared from each portion. If agreed upon by the manufacturer and the purchaser, a composite sample representing all portions taken from a given type of alloy in the shipment may be used for analysis in lieu of analyzing samples from each portion. If the manufacturer has made an analysis of the material during the course of manufacture, he shall not be required to sample and analyze the finished product.

Methods of Chemical Analysis

6. The chemical analysis shall be made in accordance with the Methods for Chemical Analysis of Aluminum and Aluminum-Base Alloys (ASTM Designation: E 34), or by any other approved methods agreed upon by the manufacturer and the purchaser. The analysis may be made spectrochemically, provided that, in case of dispute, the results secured by Methods E 34 shall be the basis for acceptance.

Specified Mechanical Properties

7. Pipe shall be supplied in the alloy and temper specified in the contract or purchase order and shall conform to the requirements as to tensile properties prescribed in Table II.

Test Specimens

8. Tension test specimens of pipes 1½ in. or less in size shall be a full section of the pipe unless the limitations of the testing machine preclude the use of such a specimen. For pipe sizes larger than 1½ in., or when it is not possible to test the full section, the standard specimens shown in Fig. 7 or Fig. 8 or specimen No. 1 of Fig. 13 of the Methods of Tension Testing of Metallic Materials (ASTM Designation: E 8) may be used. When the size of the material makes it impractical to use any of these specimens, round specimens proportional to the standard specimen shown in Fig. 8 of Methods E 8 may be used provided that in no case shall the dimensions of the smallest specimen be less than the following:

Diameter of reduced section, in.	¼
Length of reduced section, in.	1¼
Radius of fillet, in.	¼
Diameter of end section, in.	⅜
Over-all length, in.:	
With threaded or shouldered ends	3
With plain cylindrical ends	4

Number of Tests

9. For pipes 1½ in. or less in size, one tension test specimen shall be taken for each shipment of 500 lb or fraction thereof; for larger shipments, an additional specimen shall be taken for each 1000 lb or fraction thereof, in excess of the first 500 lb. For pipes in sizes greater than 1½ in., one specimen shall be taken for each shipment of 500 ft or fraction thereof; for larger shipments, an additional specimen shall be taken for each 1000 ft or fraction thereof, in excess of the first 500 ft. Other procedures for selecting specimens may be employed if

TABLE I.—CHEMICAL COMPOSITION LIMITS.

NOTE 1.—Analysis shall regularly be made only for the elements for which specific limits are shown. If, however, the presence of other elements is suspected or indicated in the course of routine analysis, further analysis shall be made to determine that these other elements are not in excess of the amount specified.

NOTE 2.—For purposes of determining conformance to these limits, an observed value of a calculated value obtained from analysis is rounded off to the nearest unit in the last right-hand place of figures used in expressing the specified limit in accordance with the rounding-off method of the Recommended Practices for Designating Significant Places in Specified Limiting Values (ASTM Designation: E 29).

Alloy[a]	Silicon, per cent	Iron, per cent	Copper, per cent	Manganese, per cent	Magnesium, per cent	Chromium, per cent	Zinc, per cent	Titanium, per cent	Other Elements, per cent		Aluminum, per cent
									Each	Total	
3003	0.6	0.7	0.20	1.0 to 1.5	...	...	0.10	...	0.05	0.15	remainder
5154	[b]	[b]	0.10	0.10	3.1 to 3.9	0.15 to 0.35	0.20	0.20	0.05	0.15	remainder
5454	[c]	[c]	0.10	0.50 to 1.0	2.4 to 3.0	0.05 to 0.20	0.25	0.20	0.05	0.15	remainder
5456	[c]	[c]	0.10	0.50 to 1.0	4.7 to 5.5	0.05 to 0.20	0.25	0.20	0.05	0.15	remainder
6061	0.40 to 0.8	0.7	0.15 to 0.40	0.15	0.8 to 1.2	0.15 to 0.35	0.25	0.15	0.05	0.15	remainder
6063	0.20 to 0.6	0.35	0.10	0.10	0.45 to 0.9	0.10	0.10	0.10	0.05	0.15	remainder

[a] These alloy designations were established in accordance with the American Standard Alloy Designation System for Wrought Aluminum (ASA No.: H35.1—1957).
[b] Iron plus silicon shall not exceed 0.45 per cent.
[c] Iron plus silicon shall not exceed 0.40 per cent.

TABLE II.—SPECIFIED MECHANICAL PROPERTIES.[a, b]

Alloy	Temper	Pipe Size, in.	Tensile Strength, min, psi		Elongation in 2 in. or 4× Diameter, min, per cent[c]
			Ultimate	Yield (0.2 per cent offset)	
3003	H18	Under 1	27 000	24 000	...
	H112	1 and over	14 000	6 000	...
5154	H38	Under 1	45 000	34 000	...
	H112	1 and over	30 000	11 000	...
5454	O	1 and over	31 000	12 000	14
	H112	1 and over	31 000	12 000	12
5456	O	All	42 000	19 000	16
	H112	All	42 000	19 000	12
6061	T6	Under 1	42 000	35 000	12
		1 and over	38 000	35 000	10
6063	T5	All (Up thru 0.500 in. Wall Thickness)	22 000	16 000	8
		All (0.501 to 1.000 in. Wall Thickness)	21 000	15 000	8
	T6	All	30 000	25 000	8

[a] For purposes of determining conformance with this specification, each value for ultimate strength and yield strength shall be rounded off to the nearest 100 psi, and each value for elongation shall be rounded off to the nearest 0.5 per cent, both in accordance with the rounding-off method of the Recommended Practices for Designating Significant Places in Specified Limiting Values (ASTM Designation: E 29).
[b] Specimens are tested parallel to the direction of working.
[c] Elongation of full-section and cut-out sheet-type specimens is measured in 2 inches; of cut-out round specimen, in 4 × specimen diameters.

agreed upon by the manufacturer and the purchaser.

Methods of Testing

10. The tension tests shall be made in accordance with the Methods of Tension Testing of Metallic Materials (ASTM Designation: E 8).

NOTE 2.—The values obtained for the tensile properties covered by this specification are not seriously affected by varitions in speed of testing. A considerable range of testing speed is permissible; however, the rate of stressing to the yield strength should not exceed 100,000 psi per min, and above the yield strength the movement per minute of the head under load should not exceed 0.5 in. per in. of gage length (or distance between grips for specimens not having reduced sections). Care must be exercised, especially when making yield strength determinations, that the speed of testing does not exceed the ability of the strain- and load-indicating equipment to function satisfactorily.

Retests

11. If any tension test specimen fails to conform to the requirements prescribed in Table II, two additional specimens from other pipes in the lot shall be selected and tested. If either of these specimens fails to conform to the applicable requirements, the material may be rejected. If, however, the failure of the specimens to conform to the requirements is the result of an inadequate thermal treatment, the material may be reannealed or reheat-treated, as applicable, and resampled in accordance with Section 9. Only one such reworking of the material shall be permitted.

Tolerances Applicable to Dimensions and Weight

12. (*a*) *Diameter.*—Outside diameter of pipe shall not vary from nominal outside diameter by an amount greater than that shown in Table IV. Specific minimum and maximum outside diameters are shown in Table III.

(*b*) *Wall Thickness.*—Wall thickness shall not vary from nominal wall thickness by an amount greater than that shown in Table V. For schedules 5 and 10 specific minimum and maximum wall thicknesses are shown in Table III. For schedules 20 and greater, specific minimum wall thicknesses are shown in Table III.

TABLE III.—DIAMETERS, WALL THICKNESS, AND WEIGHTS OF ALUMINUM-ALLOY PIPE.

Nominal Pipe Size, in.	ASA Schedule Number[a]	Outside Diameter, in.			Inside Diameter, in.	Wall Thickness, in.			Weight, lb per ft	
		Nom	Min[b]	Max[b]	Nom	Nom	Min	Max	Nom[c]	Max
1	2	3	4	5	6	7	8	9	10	11
⅛	40	0.405	0.374	0.420	0.269	0.068	0.060	....	0.085	0.091
	80	0.405	0.374	0.420	0.215	0.095	0.083	....	0.109	0.117
¼	40	0.540	0.509	0.555	0.364	0.088	0.077	....	0.147	0.159
	80	0.540	0.509	0.555	0.302	0.119	0.104	....	0.185	0.200
⅜	40	0.675	0.644	0.691	0.493	0.091	0.080	....	0.196	0.212
	80	0.675	0.644	0.691	0.423	0.126	0.110	....	0.256	0.276
½	5	0.840	0.809	0.855	0.710	0.065	0.053	0.077	0.186	....
	10	0.840	0.809	0.855	0.674	0.083	0.071	0.095	0.232	....
	40	0.840	0.809	0.855	0.622	0.109	0.095	....	0.293	0.317
	80	0.840	0.809	0.855	0.546	0.147	0.129	....	0.376	0.406
	160	0.840	0.809	0.855	0.466	0.187	0.164	....	0.451	0.487
¾	5	1.050	1.019	1.065	0.920	0.065	0.053	0.077	0.237	....
	10	1.050	1.019	1.065	0.884	0.083	0.071	0.095	0.297	....
	40	1.050	1.019	1.065	0.824	0.113	0.099	....	0.391	0.422
	80	1.050	1.019	1.065	0.742	0.154	0.135	....	0.510	0.550
	160	1.050	1.019	1.065	0.614	0.218	0.191	....	0.670	0.724
1	5	1.315	1.284	1.330	1.185	0.065	0.053	0.077	0.300	....
	10	1.315	1.284	1.330	1.097	0.109	0.095	0.123	0.486	....
	40	1.315	1.284	1.330	1.049	0.133	0.116	....	0.581	0.627
	80	1.315	1.284	1.330	0.957	0.179	0.157	....	0.751	0.811
	160	1.315	1.284	1.330	0.815	0.250	0.219	....	0.984	1.062
1¼	5	1.660	1.629	1.675	1.530	0.065	0.053	0.077	0.383	....
	10	1.660	1.629	1.675	1.442	0.109	0.095	0.123	0.625	....
	40	1.660	1.629	1.675	1.380	0.140	0.122	....	0.786	0.849
	80	1.660	1.629	1.675	1.278	0.191	0.167	....	1.037	1.120
	160	1.660	1.629	1.675	1.160	0.250	0.219	....	1.302	1.406
1½	5	1.900	1.869	1.915	1.770	0.065	0.053	0.077	0.441	....
	10	1.900	1.869	1.915	1.682	0.109	0.095	0.123	0.721	....
	40	1.900	1.869	1.915	1.610	0.145	0.127	....	0.940	1.015
	80	1.900	1.869	1.915	1.500	0.200	0.175	....	1.256	1.356
	160	1.900	1.869	1.915	1.338	0.281	0.246	....	1.681	1.815
2	5	2.375	2.344	2.406	2.245	0.065	0.053	0.077	0.555	....
	10	2.375	2.344	2.406	2.157	0.109	0.095	0.123	0.913	....
	40	2.375	2.351	2.399	2.067	0.154	0.135	....	1.264	1.365
	80	2.375	2.351	2.399	1.939	0.218	0.191	....	1.737	1.876
	160	2.375	2.351	2.399	1.689	0.343	0.300	....	2.575	2.781
2½	5	2.875	2.844	2.906	2.709	0.083	0.071	0.095	0.856	....
	10	2.875	2.844	2.906	2.635	0.120	0.105	0.135	1.221	....
	40	2.875	2.846	2.904	2.469	0.203	0.178	....	2.004	2.164
	80	2.875	2.846	2.904	2.323	0.276	0.242	....	2.650	2.862
	160	2.875	2.846	2.904	2.125	0.375	0.328	....	3.464	3.741
3	5	3.500	3.469	3.531	3.334	0.083	0.071	0.095	1.048	....
	10	3.500	3.469	3.531	3.260	0.120	0.105	0.135	1.498	....
	40	3.500	3.465	3.535	3.068	0.216	0.189	....	2.621	2.830
	80	3.500	3.465	3.535	2.900	0.300	0.262	....	3.547	3.830
	160	3.500	3.465	3.535	2.626	0.437	0.382	....	4.945	5.341

(*c*) *Length.*—Length of individual pieces of pipe shall not vary from that specified by an amount greater than that shown in Table VI.

(*d*) *Weight.*—Weight of pipe shall not vary from theoretical nominal by an amount greater than that specified in Table VII. Specific maximum weights per foot for schedules 20 and greater are shown in Table III.

(*e*) *Straightness.*—The pipe shall not vary from straight by an amount greater than that shown in Table VIII.

Workmanship and Finish

13. (*a*) Pipe shall be supplied in the mill finish and shall be of uniform quality and temper, sound and free from injurious defects.

(*b*) When so specified in the contract or order, both ends of each length of pipe, except pipe of alloy 3003, temper H112, shall be threaded using an American Standard Taper Pipe Thread. The variation from standard, when tested with the standard working gage, shall not exceed ±1½ turns. The threaded ends shall be free from burrs and suitably protected against damage in transit.

Marking for Identification

14. (*a*) When identification marking is specified on the purchase order, all pipe shall be marked with the manufacturer's name or trade mark and the applicable alloy and temper designations, the latter to be in accordance with the ASA and ASTM codification systems (ASA No. H35.1—1957 and ASTM Designation: B 296). The identification characters shall have a minimum height of ⅛ in. The marking material shall be such as to resist obliteration during normal handling and shall be removable by normal cleaning methods; however, ghost images of the characters may remain. Markings shall appear at each end of each piece.

(*b*) The foregoing requirements are minimum; marking systems which involve added information, larger characters, and greater frequencies are acceptable under this specification.

Packing, Marking, and Shipping

15. (*a*) The material shall be packed in such a manner as to prevent damage in ordinary handling and transportation. The type of packing and gross weight of individual containers shall be left to the discretion of the manufacturer unless otherwise agreed upon. Each package or container shall contain only one size, alloy, temper, or schedule number of material when packed for shipment unless otherwise agreed upon.

(*b*) Each package or container shall be

TABLE III.—*Concluded.*

Nominal Pipe Size, in.	ASA Schedule Number[a]	Outside Diameter, in.			Inside Diameter, in.	Wall Thickness, in.			Weight, lb per ft	
		Nom	Min[b]	Max[b]	Nom	Nom	Min	Max	Nom[c]	Max
1	*2*	*3*	*4*	*5*	*6*	*7*	*8*	*9*	*10*	*11*
3½	5	4.000	3.969	4.031	3.834	0.083	0.071	0.095	1.201	....
	10	4.000	3.969	4.031	3.760	0.120	0.105	0.135	1.720	....
	40	4.000	3.960	4.040	3.548	0.226	0.198	....	3.151	3.403
	80	4.000	3.960	4.040	3.364	0.318	0.278	....	4.326	4.672
4	5	4.500	4.469	4.531	4.334	0.083	0.071	0.095	1.354	....
	10	4.500	4.469	4.531	4.260	0.120	0.105	0.135	1.942	....
	40	4.500	4.455	4.545	4.026	0.237	0.207	....	3.733	4.031
	80	4.500	4.455	4.545	3.826	0.337	0.295	....	5.183	5.598
	120	4.500	4.455	4.545	3.626	0.437	0.382	....	6.500	7.084
	160	4.500	4.455	4.545	3.438	0.531	0.465	....	7.786	8.409
5	5	5.563	5.532	5.625	5.345	0.109	0.095	0.123	2.196	....
	10	5.563	5.532	5.625	5.299	0.134	0.117	0.151	2.688	....
	40	5.563	5.507	5.619	5.047	0.258	0.226	....	5.057	5.461
	80	5.563	5.507	5.619	4.813	0.375	0.328	....	7.188	7.763
	120	5.563	5.507	5.619	4.563	0.500	0.438	....	9.353	10.10
	160	5.563	5.507	5.619	4.313	0.625	0.547	....	11.40	12.31
6	5	6.625	6.594	6.687	6.407	0.109	0.095	0.123	2.624	....
	10	6.625	6.594	6.687	6.361	0.134	0.117	0.151	3.213	....
	40	6.625	6.559	6.691	6.065	0.280	0.245	....	6.564	7.089
	80	6.625	6.559	6.691	5.761	0.432	0.378	....	9.884	10.67
	120	6.625	6.559	6.691	5.501	0.562	0.492	....	12.59	13.60
	160	6.625	6.559	6.691	5.189	0.718	0.628	....	15.67	16.92
8	5	8.625	8.594	8.718	8.407	0.109	0.095	0.123	3.429	....
	10	8.625	8.594	8.718	8.329	0.148	0.130	0.166	4.635	....
	20	8.625	8.539	8.711	8.125	0.250	0.219	....	7.735	8.354
	30	8.625	8.539	8.711	8.071	0.277	0.242	....	8.543	9.226
	40	8.625	8.539	8.711	7.981	0.322	0.282	....	9.878	10.67
	60	8.625	8.539	8.711	7.813	0.406	0.355	....	12.33	13.32
	80	8.625	8.539	8.711	7.625	0.500	0.438	....	15.01	16.21
	100	8.625	8.539	8.711	7.439	0.593	0.519	....	17.60	19.00
	120	8.625	8.539	8.711	7.189	0.718	0.628	....	20.97	22.65
	140	8.625	8.539	8.711	7.001	0.812	0.711	....	23.44	25.31
	160	8.625	8.539	8.711	6.813	0.906	0.793	....	25.84	27.90
10	5	10.750	10.719	10.843	10.482	0.134	0.117	0.151	5.256	....
	10	10.750	10.719	10.843	10.420	0.165	0.144	0.186	6.453	....
	20	10.750	10.642	10.858	10.250	0.250	0.219	....	9.698	10.47
	30	10.750	10.642	10.858	10.136	0.307	0.269	....	11.84	12.79
	40	10.750	10.642	10.858	10.020	0.365	0.319	....	14.00	15.12
	60	10.750	10.642	10.858	9.750	0.500	0.438	....	18.93	20.45
	80	10.750	10.642	10.858	9.564	0.593	0.519	....	22.25	24.03
	100	10.750	10.642	10.858	9.314	0.718	0.628	....	26.61	28.74
12	5	12.750	12.719	12.843	12.420	0.165	0.144	0.186	7.672	....
	10	12.750	12.719	12.843	12.390	0.180	0.158	0.202	8.359	....
	20	12.750	12.622	12.878	12.250	0.250	0.219	....	11.55	12.47
	30	12.750	12.622	12.878	12.090	0.330	0.289	....	15.14	16.35
	40	12.750	12.622	12.878	11.938	0.406	0.355	....	18.52	20.00
	60	12.750	12.622	12.878	11.750	0.500	0.437	....	22.63	24.44
	80	12.750	12.622	12.878	11.376	0.687	0.601	....	30.62	33.07

[a] Schedule 40 is also designated as "standard" pipe and schedule 80 is also designated as "extra heavy" pipe.

[b] For schedules 5 and 10 these values apply to mean outside diameter.

[c] Based on a density of 0.098 lb per cu in., the density of 6061 and 6063 alloys, and on nominal dimensions and plain ends. For 3003 alloy multiply by 1.01; for 5154 and 5456 alloys multiply by 0.098; for 5454 alloy multiply by 0.099.

TABLE IV.—OUTSIDE DIAMETER TOLERANCE.

PIPE SIZE Inches	TOLERANCE—Inches	
	Allowable Deviation of Mean [a] Diameter From Nominal Diameter [b] 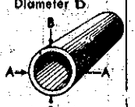 Difference Between ½ (AA + BB) and Nominal Diameter	Allowable Deviation of Diameter at any Point From Nominal Diameter [b] 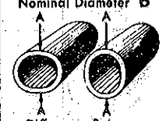 Difference Between AA and Nominal Diameter
	SCHEDULE 5 AND 10	SCHEDULE 20 AND GREATER
Under 2	+.015 −.031	+.015 −.031
2-4	+.031 −.031	+1% −1%
4½-7	+.062 −.031	+1% −1%
8-12	+.093 −.031	+1% −1%

[a] Mean diameter is the average of any two diameter measurements taken at right angles to each other at any point along the length.

[b] Nominal diameters are those listed in Table III.

TABLE V.—WALL THICKNESS TOLERANCE.

Pipe Schedule Number	Nominal Wall Thickness, in.[a]	Tolerance
5 and 10	up thru 0.083	±0.012 in.
	0.109 and over	±12½ per cent
20 and greater	all	−12½ per cent[b]

[a] Nominal wall thicknesses are those shown in Table III.

[b] Maximum wall thickness is controlled by weight tolerance.

TABLE VI.—LENGTH TOLERANCE

Specified Length, ft	Tolerance, in., plus
Up thru 20	¼
Over 20 thru 40	½

TABLE VII.—WEIGHT TOLERANCE.

Allowable deviation from theoretical weight: plus 8 per cent. (Minimum weight is controlled by tolerances for outside diameter and wall thickness.) (For schedule 5 and 10, only diameter, wall thickness, and length tolerances apply.)

TABLE VIII.—STRAIGHTNESS TOLERANCE.

PIPE SIZE Inches	TOLERANCE[a]—Inches	
	ALLOWABLE DEVIATION FROM STRAIGHT 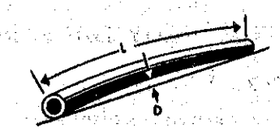 D (max) = .010 or .020 x L	
	IN EACH FOOT OF LENGTH	IN TOTAL LENGTH OF PIECE
Under 6	.010	.010 x Length, ft
6-12	.020	.020 x Length, ft

[a] When weight of pipe on flat surface minimizes deviation.

marked with the purchase order number, size and schedule number of material, specification number, alloy and temper, the latter to be in accordance with the ASA and ASTM codification systems (ASA No. H35.1—1957 and ASTM Designation: B 296), gross and net weight, and the name of the manufacturer.

(*c*) Packages or containers shall be such as to ensure acceptance by common or other carriers for safe transportation at the lowest rate to the point of delivery.

Inspection

16. (*a*) If the purchaser desires to make an inspection of the material at the manufacturer's works where the material is made, it shall be so stated in the contract or purchase order.

(*b*) If the inspection is made at the manufacturer's works, the inspector representing the purchaser shall be afforded all reasonable facilities, without charge, to satisfy him that the material is being furnished in accordance with this specification. All tests and inspection shall be so conducted as not to interfere unnecessarily with the operation of the works.

Rejection

17. Material failing to conform to the requirements of this specification or in which defects are discovered during subsequent manufacturing operations, may be rejected. If material is rejected, the manufacturer's responsibility shall be limited to replacing the rejected material without charge to the purchaser. The full weight of the rejected original material shall be returned to the manufacturer.

SPECIFICATION FOR ALUMINUM-ALLOY DIE FORGINGS

SB-247

(IDENTICAL WITH ASTM SPECIFICATION B 247-61 EXCEPT THAT ALLOYS 1100, 2018, 2025, 2218, 4032, 6151, AND 7075 HAVE BEEN DELETED)

Scope

1. This specification covers aluminum-alloy die forgings, designated as shown in Table I. For the purpose of these specifications, a die forging is one brought to its final shape in recessed dies. The maximum thickness for forgings coming within the scope of this specification is 4 in., unless otherwise indicated in Table II.

Basis of Purchase

2. Orders for material under this specification shall include the following information:

(*1*) Quantity in pieces or pounds,
(*2*) Alloy (Section 4),
(*3*) Temper (Section 7),
(*4*) Dimensions (a drawing is required), and
(*5*) Whether inspection is required at the manufacturer's works (Section 16 (*a*)).

Manufacture

3. (*a*) The materials used for the manufacture of aluminum-alloy die forgings shall be such as to produce forgings that comply with the requirements as to chemical composition, tensile properties, and hardness prescribed in this specification.

(*b*) The forgings may be manufactured in presses or by hammering at the option of the manufacturer.

Chemical Composition

4. The forgings shall conform to the requirements as to chemical composition prescribed in Table I for the alloy specified in the contract or order.

Sampling for Chemical Analysis

5. Samples for chemical analysis shall be taken in accordance with the Method of Sampling Wrought Nonferrous Metals and Alloys for Determination of Chemical Composition (ASTM Designation: E 55), except that the weight of the prepared sample may be a minimum of 75 g. For forgings weighing 5 lb or less, each, a portion shall be taken to represent each 2000 lb or fraction thereof, of material of a given alloy in the shipment and a sample prepared from each portion. For forgings weighing more than 5 lb each, the portion shall represent each 6000 lb or fraction thereof, of material. If agreed upon by the manufacturer and the purchaser, a composite sample representing all portions taken from a given alloy in the shipment may be used for analysis in lieu of analyzing samples from each portion. If the manufacturer has made an analysis of the material during the course of manufacture, he shall not be required to sample and analyze the finished product.

Methods of Chemical Analysis

6. The chemical analysis shall be made in accordance with the Standard Methods for Chemical Analysis of Aluminum and Aluminum-Base Alloys (ASTM Designation: E 34), or by any other approved methods agreed upon by the manufacturer and the purchaser. The analysis may be made spectrochemically provided that, in the case of dispute, the results secured by Methods E 34 shall be the basis for acceptance.

Tensile Properties

7. (*a*) The forgings shall be supplied in the alloy and temper specified in the contract or order and the test specimens representing the forgings, except as prescribed in Paragraph (*b*), shall conform to the requirements as to tensile properties prescribed in Table II.

(*b*) If tension test specimens are cut from forgings, the tensile properties of the specimens shall conform to the requirements of Table II except that the elongation requirement shall be reduced to 70 per cent of the numerical value given in the table.

Hardness

8. The Brinell hardness of the forgings shall conform to the requirements prescribed in Table II.

Test Specimens

9. Tension test specimens representing the forgings shall be the standard ½-in. diameter specimen shown in Fig. 8 of the Methods of Tension Testing of Metallic Materials (ASTM Designation: E 8). If the size and shape of the material makes it impracticable to use this specimen, round specimens of smaller size proportional to the standard specimen shown in Fig. 8 of Methods E 8 may be used, provided that in no case shall the dimensions of the smallest specimen be less than the following:

Diameter of reduced section, in.	¼
Length of reduced section, in.	1¼
Radius of fillet, in.	¼
Diameter of end section, in.	⅜
Over-all length, in.:	
With threaded or shouldered ends	3
With plain cylindrical ends	4

TABLE I.—CHEMICAL REQUIREMENTS (ALUMINUM IS THE REMAINDER UNLESS OTHERWISE NOTED).

NOTE 1.—Where single units are shown, these indicate the maximum amounts permitted.

NOTE 2.—Analysis shall regularly be made only for the elements specifically mentioned in this table. If, however, the presence of other elements is suspected, or indicated in the course of routine analysis, further analysis shall be made to determine that these elements are not present in excess of the limits specified in the last two columns of the table.

NOTE 3.—The following applies to all specified limits in this table: For purposes of acceptance or rejection, an observed value or a calculated value obtained from analysis should be rounded off to the nearest unit in the last right-hand place of figures used in expressing the specified limit.

Alloy[a]	Copper, per cent	Iron, per cent	Silicon, per cent	Manganese, per cent	Magnesium, per cent	Zinc, per cent	Chromium, per cent	Nickel, per cent	Titanium, per cent	Other Elements, per cent	
										Each	Total
2014	3.9 to 5.0	1.0	0.50 to 1.2	0.40 to 1.2	0.20 to 0.8	0.25	0.10	...	0.15	0.05	0.15
3003	0.20	0.7	0.6	1.0 to 1.5	...	0.10	...	...	...	0.05	0.15
6053	0.10	0.35	[d]	...	1.1 to 1.4	0.10	0.15 to 0.35	...	...	0.05	0.15
6061	0.15 to 0.40	0.7	0.40 to 0.8	0.15	0.8 to 1.2	0.25	0.15 to 0.35	...	0.15	0.05	0.15

[a] The alloy designations were established in accordance with the American Standard Alloy Designation System for Wrought Aluminum (ASA No.: H 35.1–1957).

[d] The silicon content shall be 45 to 65 per cent of the magnesium content.

TABLE II.—TENSILE AND HARDNESS REQUIREMENTS.[a]

NOTE.—For purposes of determining conformance with this specification, each value for tensile strength and yield strength shall be rounded off to the nearest 100 psi and each value for elongation shall be rounded off to the nearest 0.5 per cent, both in accordance with the Recommended Practices for Designating Significant Places in Specified Limiting Values (ASTM Designation: E 29).

Alloy	Temper	Tensile Strength, min, psi	Yield Strength, (0.2 per cent offset), min, psi	Elongation in 4 × Diam, min, per cent	Brinell Hardness, min, 500-kg load, 10-mm ball
2014	T4	55 000[c]	30 000[c]	16[c]	100[c]
2014	T6	65 000[c]	55 000[c]	10[c]	125[c]
3003	H112[b]	14 000	5 000	25	25
6053	T6	36 000[c]	30 000[c]	16[c]	75[c]
6061	T6	38 000[c]	35 000[c]	10[c]	80[c]

[a] The tensile and yield strength requirements apply to specimens from the forging stock, to specimens from coupons forged from the stock, or to specimens cut from forgings with the axis of the specimen substantially parallel to the direction of maximum flow of the metal. The elongation requirements shall be reduced to 70 per cent of the listed value when applied to specimens cut from forgings. The Brinell hardness requirements apply only to the forgings.

[b] This alloy is not heat-treatable and the properties of the forgings depend on the equivalent cold work in the forging. The requirements listed should be attainable in annealed forgings and may be exceeded considerably in many cases.

[c] Not applicable for forgings more than 4 in. in thickness.

The specimens may be machined from a section of the stock used for making the forgings, from a coupon forged from the stock, from a prolongation of the forging, or from one of the forgings in the lot. In all cases, the axis of the test specimen shall be as nearly parallel to the direction of maximum flow of metal as possible. Specimens representing heat-treated forgings shall be heat treated with the forgings they represent or shall be machined from coupons that have been so treated.

Number of Tension Tests

10. For forgings which weigh 5 lb or less, each, at least one tension test specimen shall be tested to represent each 2000 lb, or fraction thereof, of forgings of the same alloy, temper and design in the shipment; for larger forgings, at least one specimen shall be tested to represent each 6000 lb, or fraction thereof, in the shipment. If the shipment contains forgings of more than one design, but which are of the same alloy and temper and have been forged from the same lot of stock, the several designs may be considered as one in arriving at the required number of test specimens.

Methods of Testing

11. (*a*) The tension tests shall be made in accordance with Methods E 8.

NOTE.—The values obtained for the tensile properties covered by this specification are not seriously affected by variations in speed of testing. A considerable range of testing speed is permissible; however, the rate of stressing to the yield strength should not exceed 100,000 psi per min, and above the yield strength the movement per minute of the head under load should not exceed 0.5 in. per in. of gage length (or distance between grips for specimens not having reduced sections). Care must be exercised, especially when making yield strength determinations, that the speed of testing does not exceed the ability of the strain- and load-indicating equipment to function satisfactorily.

(*b*) Brinell hardness tests shall be made in accordance with the Method of Test for Brinell Hardness of Metallic Materials (ASTM Designation: E 10), applying a 500-kg load on a 10-mm ball for 30 sec. Other equivalent combinations of load and ball or alternate methods of testing may be used if desired provided that, in case of dispute, the results secured with the 500-kg load and 10-mm ball shall be the basis of acceptance.

Retests

12. (*a*) If a tension test specimen from a forging or from a prolongation of a forging fails to conform to the requirements in Table II, the manufacturer may:

(*1*) Reheat-treat the lot of forgings represented and repeat the test, using a test specimen from the forging originally sampled, if desired, or

(*2*) Test specimens from two additional forgings, or from prolongations on two additional forgings, in the lot.

If the procedure in Item (*2*) is followed, both additional specimens shall conform to the requirements in Table II and the forging originally sampled shall be rejected. If either of the additional specimens fails to meet the requirements, the

forgings of the lot may be reheat-treated and the tests repeated.

(*b*) If a tension test specimen taken from the stock or from a coupon forged from the stock fails to conform to the requirements in Table II, two additional specimens, if available, may be tested and both shall conform to the requirements. The additional specimens shall be from the same lot of stock or from coupons forged from the same lot of stock as the specimen first tested, and shall have been heat-treated with the original specimen. When no additional specimens are available, or if the manufacturer so elects, test specimens may be cut from a forging in the lot, in which case, the results of the first test shall be discarded and the specimens from the forging shall constitute an original test.

(*c*) If the manufacturer so elects, he may reheat-treat the lot of forgings together with representative test specimens, either before or after making retests as described in Paragraph (*b*), and may then consider the forgings as a new lot for purposes of sampling and testing.

(*d*) If the Brinell hardness of a forging fails to conform to the requirements in Table II, two additional determinations of the hardness may be made. If either of these additional determinations fails to conform to the requirements, the manufacturer may reheat-treat the forging and repeat the test.

Permissible Variations in Dimensions

13. The forgings shall conform to the shape and dimensions specified in the contract or order within such variations as may be shown on the drawings.

Workmanship and Finish

14. The forgings shall be of uniform quality and condition and free from blisters, fins, seams, laps, cracks, segregations, or other injurious defects within the limits of the best commercial practice. Heat treatments, when required to attain the properties prescribed in Table II, shall be applied to the entire forging, never to a part only, and the procedures used shall be as the manufacturer may elect.

Packing, Marking, and Shipping

15. (*a*) The material shall be packed in such a manner as to prevent damage in ordinary handling and transportation. The type of packing and gross weight of individual containers shall be left to the discretion of the supplier unless otherwise agreed upon. Each package or container shall contain only one size, alloy, or temper of material when packed for shipment unless otherwise agreed upon.

(*b*) Each package or container shall be marked with the purchase order number, size of material, specification number, alloy and temper, the latter to be in accordance with the ASA and ASTM codification systems (ASA No. H35.1–1957 and ASTM Designation: B 296), gross and net weights, and name of the manufacturer.

(*c*) Packages or containers shall be such as to ensure acceptance by common or other carriers for safe transportation at the lowest rate to the point of delivery.

Inspection

16. (*a*) If the purchaser desires to make an inspection of the material at the manufacturer's works where the material is made, it shall be so stated in the contract or purchase order.

(*b*) If the purchaser elects to have the inspection made at the manufacturer's works, the manufacturer shall afford the inspector representing the purchaser all reasonable facilities, without charge, to satisfy him that the material is being furnished in accordance with this specification. All tests and inspection shall be so conducted as not to interfere unnecessarily with the operation of the works.

Rejection

17. Material failing to conform to the requirements of this specification or in which defects are discovered during subsequent manufacturing operations may be rejected. If material is rejected, the manufacturer's responsibility shall be limited to replacing the rejected material without charge to the purchaser. The full weight of the rejected original material shall be returned to the manufacturer.

SPECIFICATION FOR COPPER AND COPPER-ALLOY WELDING RODS

SB-259

(IDENTICAL WITH ASTM SPECIFICATION B 259-57T)

Scope

1. This specification covers copper and copper-alloy welding rods for use with the oxyacetylene, carbon-arc and inert-gas metal-arc (nonconsumable electrode) welding processes.

NOTE.—This specification is not intended for electrodes used with the inert-gas metal-arc (consumable electrode) welding process. This type electrode is covered by the Specification for Copper and Copper-Alloy Welding Electrodes (ASTM Designation: B 225; AWS Designation A 5.6).

PART I.—CLASSIFICATION AND ACCEPTANCE

Classification

2. (*a*) The welding rods are classified on the basis of chemical composition of the welding rod and mechanical properties of the weld for the welding processes for which applicable.

(*b*) Any welding rod classified under one classification shall not be classified under any other classification.

Manufacture

3. The welding rods may be made by

TABLE I.—CHEMICAL REQUIREMENTS.

NOTE 1.—Analysis shall be made for the elements for which specific values are shown in this table. If, however, the presence of other elements is indicated in the course of routine analysis, further analysis shall be made to determine that the total of these other elements is not present in excess of the limits specified for "total other elements" in the last column in the table.

NOTE 2.—Single values shown are maximum percentages except where otherwise specified.

Common Name	AWS-ASTM Classification	Copper (including silver), per cent	Zinc, per cent	Tin, per cent	Manganese, per cent	Iron, per cent	Silicon, per cent	Nickel (including cobalt), per cent	Phosphorus, per cent	Aluminum, per cent	Lead, per cent	Titanium, per cent	Total Other Elements, per cent[a]
Copper	RCu	98.0 min	...	1.0	0.5	*	0.50	*	0.15	0.01*	0.02*	...	0.50
Copper-silicon [silicon bronze]	RCuSi-A	94.0 min	1.5[b]	1.5[b]	1.5[b]	0.5	2.8 to 4.0	*	*	0.01*	0.02*	...	0.50
	RCuSi-B	97.0 min	1.5[b]	1.5[b]	1.5[b]	0.5	1.0 to 2.0	*	*	0.01*	0.02*	...	0.50
Copper-tin [phosphor bronze]	RCuSn-A	93.5 min	*	4.0 to 6.0	*	*	*	*	0.10 to 0.35	0.01*	0.02*	...	0.50
Copper-nickel	RCuNi	remainder	1.0	1.20	1.25	0.40 to 0.70	0.25	29.0 to 33.0	...	...	0.02*	0.50	0.50
Naval brass	RBCuZn-A[c]	57 to 61	remainder	0.25 to 1.00	*	*	*	...	...	0.01*	0.05*	...	0.50
Low-fuming bronze [nickel]	RCuZn-B	56 to 60	remainder	0.75 to 1.10	0.01 to 0.50	0.25 to 1.25	0.04 to 0.15	0.2 to 0.8	...	0.01*	0.05*	...	0.50
Low-fuming bronze	RCuZn-C	56 to 60	remainder	0.75 to 1.10	0.01 to 0.50	0.25 to 1.25	0.04 to 0.15	...	...	0.01*	0.05*	...	0.50
Nickel bronze	RBCuZn-D[c]	46 to 50	remainder	...	...	...	0.04 to 0.25	9.0 to 11.0	0.25	0.01*	0.05*	...	0.50
Copper-aluminum [aluminum bronze]	RCuAl-A2	remainder	0.02	...	...	1.5	0.10	...	...	9.0 to 11.0	0.02	...	0.50
	RCuAl-B	remainder	0.02	...	...	3.0 to 4.25	0.10	...	...	11.0 to 12.0	0.02	...	0.50

[a] Total other elements, including the elements marked with an asterisk (*) shall not exceed the value specified.
[b] One or more of these elements may be present within the limits specified.
[c] This AWS-ASTM classification is intended to be identical with the same classification that appears in the latest edition of the Specification for Brazing Filler Metal (AWS Designation A 5.8; ASTM Designation B 260). (The chemical analysis shown is that which appears in the 1956 edition of AWS A 5.8; ASTM B 260.)

any method that will yield a uniform product conforming to the requirements of this specification.

Acceptability

4. (*a*) Chemical composition and mechanical tests shall be performed when and as prescribed by the manufacturer.

(*b*) At the option and expense of the purchaser either or both of the foregoing tests may be used as a basis for acceptance of the welding rods.

Chemical Composition

5. The chemical composition of the welding rods shall conform to the requirements prescribed for their classification in Table I, as determined in accordance with Section 16.

Mechanical Tests

6. The following mechanical tests are prescribed to demonstrate the mechanical properties, soundness, and ductility of the deposited metal obtained from the welding rods classified herein and for the specific welding process to be used:

(*1*) A transverse-tension test to determine the mechanical properties of a joint made with the welding rod being tested, and

(*2*) A guided-bend test to demonstrate the soundness and ductility of weld metal obtained from the welding rod being tested.

TABLE II.—MECHANICAL REQUIREMENTS OF COPPER AND COPPER-ALLOY WELDING RODS, TRANSVERSE-TENSION TEST SPECIMENS.

AWS-ASTM Classification	Tensile Strength, min, psi.		Applicable Processes[a]
	Copper-Alloy Base Plate	Steel Base Plate	
RCu	25 000	...	C, G, I
RCuSi-A	50 000	...	C, G, I
RCuSi-B	35 000	...	C, G
RCuSn-A	35 000	...	C, I
RCuNi	50 000	...	C, I
RBCuZn-A	50 000	40 000	G
RCuZn-B	56 000	50 000	G
RCuZn-C	56 000	50 000	G
RBCuZn-D	...	60 000	G
RCuAl-A2	65 000	...	C,[b] I
RCuAl-B	70 000	...	C,[b] I

[a] C = carbon-arc welding,
G = oxyacetylene welding,
I = inert-gas arc welding (metal and carbon).

[b] Welding rods shall be covered for carbon-arc welding.

Methods of Test

7. The prescribed tests, when conducted, shall be as specified in Sections 14 to 19, inclusive.

Mechanical Test Requirements

8. In order to be classified under this specification a welding rod shall be capable of yielding the following results:

(*1*) The mechanical properties of each of the two transverse-tension test specimens shall conform to the requirements prescribed in Table II, and

(*2*) Both guided-bend test specimens, after bending, shall show no crack or other open defect exceeding $\frac{1}{8}$ in. measured in any direction. Cracks occurring on corners of a specimen during testing shall not be considered.

Retests

9. (*a*) If either transverse-tension test specimen fails, one additional test assembly shall be prepared and the two specimens from this assembly shall conform to tensile properties prescribed in Table II.

(*b*) If either guided-bend test specimen fails, one additional test assembly shall be prepared and the two specimens removed from this assembly shall meet the prescribed requirements.

Standard Sizes and Lengths

10. (*a*) Standard sizes of welding rods shall be as shown in Table III.

(*b*) All cut lengths of swaged and drawn welding rods shall be 36 $\pm \frac{3}{8}$ in. in length. Welding rods (wire) may also be furnished in coils.

Packaging

11. (*a*) Welding rods shall be suitably packaged to insure against injury during shipment or storage under normal conditions.

(*b*) Standard packages shall be 10, 25, 50, and 100 lb net weight.

Marking

12. (*a*) All packages and coils shall be legibly marked or tagged with the following information:

(*1*) Classification and specification number,

(*2*) Manufacturer's name and trade designation,

(*3*) Size, length, and net weight, and

(*4*) Whether or not the welding rod is covered, for the RCuAl-A2 and RCuAl-B classifications only.

(*b*) Each welding rod, $\frac{1}{8}$ in. and larger in diameter, furnished in cut length, shall be marked with the classification number. Welding rod (wire) shipped in coils shall be flattened or tagged at both ends.

Guarantee

13. The manufacturer shall guarantee that the welding rods in all sizes and classifications conform to this specification. The manufacturer's responsibility shall be limited to replacement of any welding rods which do not conform to the requirements of this specification.

PART II.—DETAILS OF TESTS

General

14. (*a*) The tests specified in Sections 5 and 6 shall be conducted in accordance with the requirements of Sections 16, 17, 18, and 19 of this Part II.

(*b*) Chemical analysis shall be made on welding rods of all sizes.

(*c*) Mechanical tests shall be made for

TABLE III.—STANDARD SIZES OF COPPER AND COPPER-ALLOY WELDING RODS.

AWS-ASTM Classification	Standard Sizes, Nominal Diameter, in.[a]
RCu	$\frac{1}{16}$, $\frac{3}{32}$, $\frac{1}{8}$, $\frac{5}{32}$, $\frac{3}{16}$, $\frac{1}{4}$
RCuSi-A	$\frac{1}{16}$, $\frac{3}{32}$, $\frac{1}{8}$, $\frac{5}{32}$, $\frac{3}{16}$, $\frac{1}{4}$
RCuSi-B	$\frac{1}{16}$, $\frac{3}{32}$, $\frac{1}{8}$, $\frac{5}{32}$, $\frac{3}{16}$, $\frac{1}{4}$
RCuSn-A	$\frac{1}{16}$, $\frac{5}{32}$, $\frac{3}{16}$, $\frac{1}{4}$
RCuNi	$\frac{1}{16}$, $\frac{3}{32}$, $\frac{1}{8}$, $\frac{5}{32}$, $\frac{3}{16}$, $\frac{1}{4}$
RBCuZn-A	$\frac{1}{16}$, $\frac{3}{32}$, $\frac{1}{8}$, $\frac{5}{32}$, $\frac{3}{16}$, $\frac{1}{4}$
RCuZn-B	$\frac{1}{16}$, $\frac{3}{32}$, $\frac{1}{8}$, $\frac{5}{32}$, $\frac{3}{16}$, $\frac{1}{4}$
RCuZn-C	$\frac{1}{16}$, $\frac{3}{32}$, $\frac{1}{8}$, $\frac{5}{32}$, $\frac{3}{16}$, $\frac{1}{4}$
RBCuZn-D	$\frac{1}{16}$, $\frac{3}{32}$, $\frac{1}{8}$, $\frac{5}{32}$, $\frac{3}{16}$, $\frac{1}{4}$
RCuAl-A2	$\frac{3}{32}$, $\frac{1}{8}$, $\frac{5}{32}$, $\frac{3}{16}$, $\frac{1}{4}$
RCuAl-B	$\frac{3}{32}$, $\frac{1}{8}$, $\frac{5}{32}$, $\frac{3}{16}$, $\frac{1}{4}$

[a] The diameter of the welding rods shall not vary more than the following from the nominal:

Nominal Diameter, in.	Permissible Variations, plus and minus, in.	
	Drawn Rods	Swaged Rods
$\frac{5}{32}$ and under	0.003	0.01
$\frac{3}{16}$ and over	0.004	0.02

welding rods $\frac{1}{8}$ in. or larger in diameter; only one size welding rod need be tested for any classification and welding process.

Material for Test Plates

15. The base metal to be used for test plates shall conform to the specifications prescribed in Table IV for the classification under which the welding rod is to be tested.

Chemical Analysis

16. A minimum sample of 2 oz of welding rod shall be used to make the prescribed chemical analysis. Chemical analysis may be made by any suitable method.

Test Assembly

17. (*a*) Welding of the test assembly for transverse-tension and guided-bend tests shall be done using welding techniques and processes specified by the manufacturer of the particular welding rod under test as to factors not specified herein.

(*b*) The test joint shall conform to the dimensional requirements shown in Fig. 1.

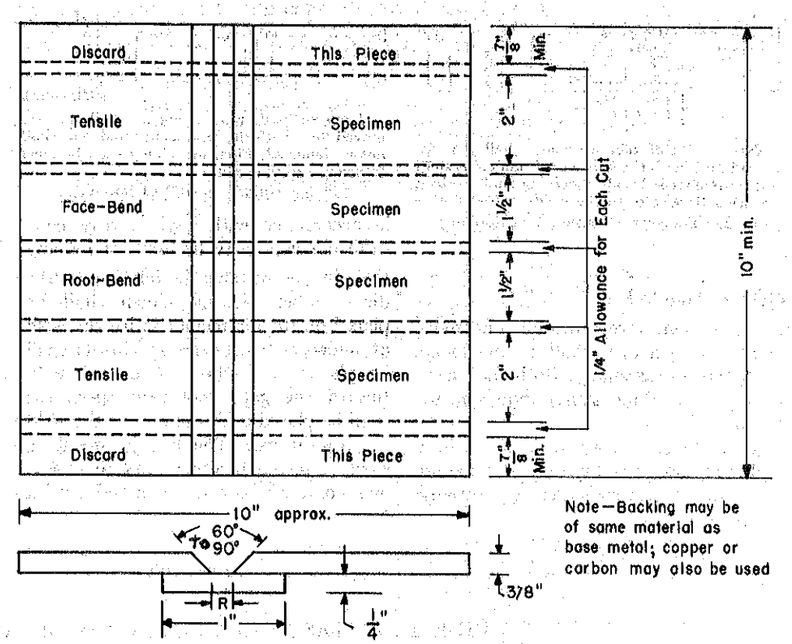

Welding Process	Backing	Root Opening, *R*	
		For welding rods 3/16 in. and under in diameter	For welding rods over 3/16 in. in diameter
Carbon-arc	Yes	3/32	1/8 to 3/16
Oxy-acetylene*	No	1/8	1/8 to 3/16
	Yes	3/16	1/8 to 1/4
Inert-gas arc	Yes	3/32	1/8 to 3/16

* Backing is optional.

FIG. 1.—Test Assembly.

TABLE IV.—BASE METAL FOR TRANSVERSE-TENSION AND GUIDED-BEND TEST SPECIMENS.

AWS-ASTM Classification	Base Metal Specifications
RCu	ASTM B 152, type DHP, annealed; or ASTM B 11, type DHP, annealed
RCuSi-A	ASTM B 96, alloy A, annealed
RCuSi-B	ASTM B 96, alloy C, annealed
RCuSn-A	ASTM B 103, alloy A, soft
RCuNi	ASTM B 122, alloy 5, annealed; or ASTM B 171 copper-nickel alloy, annealed
RBCuZn-A, RCuZn-B, RCuZn-C	Copper alloy: Federal Specification QQ-B-721a, annealed, Class A; or Navy Specification 46 B15e, annealed, Class A; or Steel: ASTM A 285; or ASTM A 7
RBCuZn-D	ASTM A 285; or ASTM A7
RCuAl-A2, RCuAl-B	ASTM B 169, alloy D annealed

(*c*) All welding shall be done in the flat position.

(*d*) For the carbon-arc and inert-gas metal-arc processes, the test assembly shall be within the temperature ranges shown in the table below before starting to weld each pass. If, after any pass, the maximum temperature specified is exceeded, plates shall be allowed to cool in air to within the specified temperature range. Water shall not be used for cooling.

AWS-ASTM Classification	Preheat and Interpass Temperatures, deg Fahr	
	Minimum	Maximum
RCu	600	1000
RCuSi	60	150
RCuSn	350	550
RCuNi	60	220
RCuZn	350	550
RCuAl	300	400

Transverse-Tension Test

18. (*a*) Two transverse-tension test specimens shall be machined from the test assembly. Both transverse-tension specimens shall conform to the dimensional requirements shown in Fig. 2.

(*b*) Each specimen shall be subjected to tension load until failure.

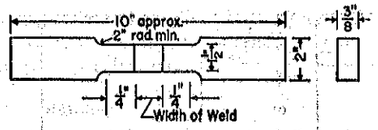

NOTE.—Weld reinforcement shall be removed flush with the base metal; undercut shall not be removed. Final machining shall be in a direction transverse to the weld.

FIG. 2.—Transverse-Tension Test Specimen.

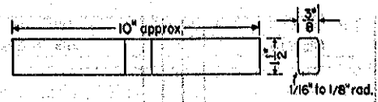

NOTE.—Weld reinforcement shall be removed flush with the base metal; undercut shall not be removed. Final machining shall be done transverse to the weld.

FIG. 3.—Guided-Bend Test Specimen.

Guided-Bend Tests

19. (*a*) One face-bend and one root-bend test specimen shall be machined from the test assembly. Both shall conform to the dimensional requirements shown in Fig. 3.

(*b*) Each specimen shall be bent in a jig having the working contour shown in Fig. 4 and otherwise made substantially in accordance with Fig. 4. Any convenient means may be used for moving the plunger member in relation to the die member. The specimen shall be placed on the die member with the weld at midspan. Face-bend specimens shall be placed with the face of the weld toward the gap; root-bend specimens shall be placed with the root of the weld toward the gap. The two jig members shall be forced together until the specimen conforms to a U-shape and until a $\frac{1}{32}$ in. diameter wire cannot be placed between the specimen and any point on the curvature of the plunger member. The specimen shall then be taken out of the jig and the convex surface examined.

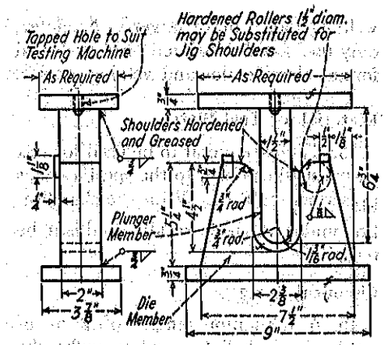

FIG. 4.—Guided-Bend Test Jig.

APPENDIX

GUIDE TO AWS-ASTM CLASSIFICATION OF COPPER AND COPPER-ALLOY WELDING RODS

PART I.—INTRODUCTION

This guide is appended to the specification as a source of information; *it is not mandatory and does not form a part of the specification.*

The specification itself is intended to provide both the manufacturer and the purchaser of copper and copper-alloy welding rods with a means of production control and a basis of acceptance through mutually acceptable, sound, standard requirements.

This guide has been prepared as an aid to prospective users of the copper and copper-alloy welding rods covered by the specification in determining which classification of welding rod is best suited for a particular application, with due consideration to the particular requirements for that application.

The specification classifies those copper and copper-alloy welding rods used most extensively at the time of issuance of the specification. The welding rods are arranged in six basic groups of classifications, each distinguished by its principal alloying element. Test methods and test results are prescribed for each classification covering the basic properties of that classification. These properties include tensile strength and soundness as well as chemical composition and usability. Tests for hardness are not included in this specification. For reference, however, a chart of typical hardnesses is included as Table A of this guide. Each of the basic classification groups is discussed in the parts of this guide which follow. A summary of the data will be found in Table B.

TABLE A.—HARDNESS OF COPPER AND COPPER-ALLOY WELD METAL.

NOTE.—Hardness values as listed below are average values for an as-welded pad made with the welding rod specified. This table is included for information only; hardness testing is not required under this specification.

AWS-ASTM Classification	Brinell Hardness
RCu	25 Rockwell F
RCuSi-A	80 to 100 (500 kg load)
RCuSi-B	60 to 85 (500 kg load)
RCuSn-A	70 to 85 (500 kg load)
RCuNi	60 to 80 (500 kg load)
RBCuZn-A	70 to 90 (500 kg load)
RCuZn-B, RCuZn-C	80 to 110 (500 kg load)
RBCuZnD	90 to 110 (500 kg load)
RCuAl-A2	100 to 130[a] 100 to 150[b] (3000 kg load)
RCuAl-B	140 to 180[a] 180 to 220[b] (3000 kg load)

[a] Carbon-arc welding process only.
[b] Inert-gas metal-arc processes only.

It is recognized that supplementary tests may be necessary to determine the suitability of these welding rods, for applications involving properties not considered in this specification. In such cases, additional tests to determine such specific properties as bearing performance, corrosion resistance, mechanical properties at low and high temperatures, wear resistance, and suitability for welding combinations of dissimilar metals may be conducted upon agreement between the manufacturer and the purchaser.

The numbering system for identifying welding rod classifications is set up as follows:

The letter "R" at the beginning of each number indicates a welding rod, as distinguished from electrodes and brazing filler metal. The "RB" in "RBCuZn-A" and "RBCuZn-D" indicates that the filler metal is suitable as a welding rod and as a brazing filler metal.

The chemical symbol "Cu" is used to identify the welding rods as copper-base alloys and the additional chemical symbols, as the "Si" in "RCuSi," the "Sn" in "RCuSn," etc., indicate the principal alloying element of each group. Where more than one classification is included in a basic group, the individual classifications in the group are identified by the letters "A," "B," "C," etc., as in "RCuZn-B." Further subdividing is done by using a "1," "2," etc. after the last letter, as the "2" in "RCuAl-A2."

PART II.—COPPER WELDING RODS

RCu (Copper) Classification.—When using copper as an engineering material, it is imperative that the type of copper be plainly specified. This is particularly true in the case of welding, as the choice of base metal will largely dictate the choice of welding rod.

TABLE B.—SUMMARY OF DATA FOR COPPER AND COPPER-ALLOY WELDING RODS.

Welding Process	Base Metal	Flame Adjustment	Type of Current	Preheat	Backing[b]	Flux	Type of Edge Preparation	Position of Welding	Comments
COPPER (RCu) WELDING RODS									
Oxy-acetylene	deoxidized copper	neutral or slightly oxidizing	....	desirable on heavy sections	desirable in most cases	usually	square groove on thin sections; single or double vee groove on thicker sections	all	none
Carbon-arc	deoxidized copper	....	d-c straight polarity	desirable in most cases; required on heavy sections	desirable in most cases	usually	square groove on thin sections; single or double vee groove on thicker sections	flat only	process best used on joints where a single layer weld is adequate
Inert-gas arc	deoxidized copper; electrolytic tough pitch copper	....	d-c straight polarity	desirable; required on heavy sections	desirable in most cases	not usually	square groove on thin sections; single or double vee groove on thicker sections	flat preferred	none
COPPER-SILICON (RCuSi) WELDING RODS									
Oxy-acetylene	copper-silicon alloys	slightly oxidizing	....	not generally	not generally	yes	square groove on thin sections; single or double vee groove on thicker sections	all	keep weld pool small as metal is hot short
Carbon-arc	deoxidized coppers; copper-zinc alloys; copper-silicon alloys; copper to steel; galvanized iron	....	d-c straight polarity	no	required only for very thin material	yes	square groove on thin sections; single or double vee groove on thicker sections	all; flat preferable	keep weld pool small, as metal is hot short
Inert-gas arc	deoxidized coppers; copper-zinc alloys; copper-silicon alloys; copper to steel; dissimilar metals	....	d-c straight polarity	no	required only for very thin material	no	square goove on thin sections; single or double vee groove on thicker sections	all; flat preferable	keep weld pool small, as metal is hot short
COPPER-TIN (RCuSn) WELDING RODS									
Oxy-acetylene[a]	....	....	....	....	....	....	....	....	....
Carbon-arc	copper	....	d-c straight polarity	desirable	essential	usually	single vee groove	flat only	weld metal is hot short; some porosity may be noted
Inert-gas arc	copper; copper-tin alloys	....	d-c straight polarity	desirable	essential	no	single vee groove	flat only	weld metal is hot short; some porosity may be noted
COPPER-NICKEL (RCuNi) WELDING RODS									
Oxy-acetylene	copper-nickel alloys	slightly reducing	....	none	none	yes	square groove on thin sections; single vee on thicker sections	all	keep rod in protective envelope of flame during welding
Carbon-arc[a]	....	....	....	....	....	....	....	....	....
Inert-gas arc	copper-nickel alloys	....	d-c straight polarity or a-c	none	desirable	no	square groove on thin sections; single vee on thicker sections	all	keep arc short; use high welding speeds
COPPER-ZINC (RCuZn) WELDING RODS									
Oxy-acetylene	copper; copper-zinc alloys; steel to cast iron; steel; cast iron	neutral or slightly oxidizing	....	may be desirable	may be desirable	yes	square groove for thin sections; single and double vee groove for thicker sections	all	lead in base metal may cause difficulties
Carbon-arc[a]	....	....	....	....	....	....	....	....	....
Inert-gas arc[a]	....	....	....	....	....	....	....	....	....
COPPER-ALUMINUM (RCuAl) WELDING RODS									
Oxy-acetylene[a]	....	....	....	....	....	....	....	....	....
Carbon-arc	copper-aluminum alloys; copper-zinc alloys; copper-nickel alloys; ferrous metals	....	d-c straight polarity	necessary	desirable	yes	square groove for thin sections; single or double vee groove for thicker sections	flat only	none
Inert-gas arc	copper-aluminum alloys; copper-aluminum to steel; ferrous metals	....	a-c or d-c straight polarity	necessary	desirable	no	square groove for thin sections; single or double vee groove for thicker sections	flat only	none

[a] This welding process is not used with this type of welding rod.
[b] See Note, Fig. 1 of specification.

Copper is, generally speaking, of three types, (*1*) deoxidized, (*2*) oxygen-free high-conductivity, and (*3*) electrolytic tough pitch. Electrolytic tough pitch copper generally cannot be used in welding if a welded joint requiring the strength of the base metal is desired. However, where highest quality is not required, it is being used. The deoxidized coppers, on the other hand, can be welded, producing joints of maximum strength.

RCu welding rods are made of deoxidized copper but also may contain one or more of the following elements: phosphorus, silicon, tin, manganese, silver. Phosphorus and silicon are added primarily as deoxidizers. The other elements add either to the ease of welding or to the properties of the final weldment. Welding rods conforming to classification RCu which contain 0.15 per cent, max, phosphorus give a fluid weld metal and are, to a limited extent, self fluxing. Welds made with these rods tend to be somewhat porous, giving strength varying from one-half to full strength of the soft base metal. RCu welding rods may contain 0.5 per cent, max, silicon or 1.00 per cent, max, tin or 0.5 per cent, max, manganese, alone or in combination, to give welds of greater soundness and strength. RCu welding rod containing silver (to 1.0 per cent) has good fluidity.

When using the RCu rods with the oxy-acetylene process, a neutral or slightly oxidizing flame is preferred. Preheating should be used if the metal to be welded is of any appreciable thickness. A copper backing is desirable in most cases; the joint as well as the rod is usually fluxed. A boric acid-borax flux is commonly used. On thin sections square groove welds are used; on heavier sections, single and double vee grooves. Welding can be done in all positions.

Carbon-arc welding using RCu rods is done with d-c straight polarity. Pointed graphite electrodes are usually used. Preheating is desirable on most work, particularly on heavy sections. However, overheating must be avoided. The use of a copper backing is desirable, unless the edges to be welded are tightly butted together with little or no root opening. Fluxing is usually used; both joint and rod are fluxed. A fused borax flux with added sodium fluoride is usually used. Square groove welds are used on thin sections. Sections $\frac{3}{16}$ to $\frac{1}{4}$ in. thick should have a single vee groove; a double vee groove should be used for thicker sections. Welding is limited to the flat position. The process is best used on joints where a single layer is adequate.

Inert-gas arc welding using RCu welding rods is done with d-c straight polarity. Preheating is desirable on most work; on heavy material, it is essential. Preheat temperatures of 400 to 1000 F are suitable. Backing is used in most cases. Fluxing is not required, although, on butt joints without root opening where the shielding gas may not penetrate to the root of the joint, a flux is sometimes used to supplement the gas shield. Square groove welds are used on thin sections. Sections $\frac{3}{16}$ to $\frac{1}{4}$ in. thick should have a single vee groove; a double vee groove should be used for thicker sections. Welding in the flat position is preferred.

Part III.—Copper-Silicon Welding Rods

RCuSi (Copper-Silicon) Classification.—*RCuSi-A* welding rods are made of copper-base alloys containing approximately 3 per cent silicon; the rods may also contain small percentages of manganese, tin, or zinc. RCuSi-A welding rods are used for oxy-acetylene, carbon-arc and inert-gas metal-arc welding of copper, copper-silicon, and copper-zinc base metals to themselves, and also to steel.

Welding rods conforming to classification *RCuSi-B* usually contain about 1.5 per cent silicon and additions of not more than 1.5 per cent each of one or more of these elements: manganese, tin, or zinc. They are used primarily for oxy-acetylene welding of red brass (85 per cent copper, 15 per cent zinc) piping, and for carbon-arc welding.

When using RCuSi welding rods with the oxy-acetylene process, a slightly oxidizing flame is used. Since the weld metal is hot short, it is best to keep the weld pool small to assure rapid solidification and to avoid contraction strains. Generally, neither preheating nor backing is required. Fluxing is essential; a flux with a high boric acid content is usually used and should be applied before and during welding. A square groove weld is used on thin sections; a single or double vee on thicker sections. Welding can be done in all positions.

Carbon-arc welding is done using RCuSi rods with d-c straight polarity. Tapered graphite electrodes are usually used. The size of the electrode should be the same or greater than the size of the welding rod. As in oxy-acetylene welding, it is best to keep the weld pool small. Preheating is not necessary. Only very thin material requires use of a backing. Fluxing is essential. Before welding, flux is best applied by brushing on a thin paste made with methyl alcohol along the edges to be joined. When the work is hot, dry flux should be sprinkled on. A square groove weld is used on thin sections. Material $\frac{3}{16}$ to $\frac{1}{4}$ in. thick is welded using a single vee groove. For material over $\frac{1}{4}$ in., a double vee groove weld is used. Welding can be done in all positions, but the flat position is preferred.

Inert-gas arc welding using RCuSi rods is done with d-c straight polarity or a-c. Again it is best to keep the weld pool small. Preheating and fluxing are not required. The shielding gas can be either argon or helium; welding current values for helium are somewhat lower than for argon. A backing is required on thin sections only. A square groove weld is used on thin sections. Sections $\frac{3}{16}$ to $\frac{1}{4}$ in. thick are welded using a single vee groove; a double vee groove is used on thicker sections. Welding can be done in all positions, but the flat position is preferred.

Part IV.—Copper-Tin Welding Rods

RCuSn (Copper-Tin) Classification.—RCuSn-A welding rods contain about 5 per cent tin with up to 0.30 per cent phosphorus added as a deoxidizer. The tin increases the wear resistance of the weld metal and also broadens the temperature range between the liquidus and solidus points, thereby slowing up the solidification of the weld metal. This slower solidification increases the tendency to hot shortness. To minimize this effect the weld pool is kept small and welding time must be kept as short as possible. Copper-tin welding rods are used with the carbon-arc, and inert-gas metal-arc processes to weld copper and copper-tin base metals.

Carbon-arc welding using RCuSn-A rods is done with d-c straight polarity. Preheating is desirable; a backing is essential. Fluxing is usually required. Welding is done in the flat position only. A single vee groove weld is usually used. Thicker materials are not usually welded with the RCuSn-A rods. The weld metal is hot short and some porosity may be noted.

Inert-gas arc welding using RCuSn-A welding rods is done with d-c straight polarity. Preheating is desirable; a backing is essential. Fluxing is not required. A single vee groove weld is usually used. Welding is doe in the flat position only. Some porosity will probably be encountered.

Part V.—Copper-Nickel Welding Rods

RCuNi (Copper-Nickel) Classification.—RCuNi welding rods contain about 30 per cent nickel, and may also contain additions of zinc (to 1.0 per cent), tin (to 1.20 per cent), manganese (to 1.25 per cent), and iron and titanium (to 0.50 per cent each). The nickel strengthens the weld metal and improves the corrosion resistance, particularly against salt water. The weld metal from these welding rods has good hot and cold ductility.

When using RCuNi welding rods with the oxy-acetylene process, a slightly reducing flame is used. Preheating and backing are not required. Liberal fluxing is essential and fluxes made especially for nickel or copper-nickel alloys should be used. A square groove is preferred for thin sections, a single vee groove for heavier sections. Limited melting of the base metal is desirable in order to speed up solidification of the weld pool. Welding, once started, should progress to the end of the joint without stopping, and the welding rod should be held in the protective flame envelope continuously. Welding is done in all positions.

Inert-gas arc welding with RCuNi welding rods is done preferably with d-c straight polarity although a-c may be used. Preheating is not required and flux is usually not used. A backing is usually desirable. A square groove weld is used on thin sections; a single vee groove on heavier sections. Welding is done in all positions. The arc should be kept as short as possible and welding speeds should be high.

Part VI.—Copper-Zinc Welding Rods

RCuZn (Copper-Zinc) Classifications.—RCuZn welding rods are modifications of the 60-40 copper-zinc alloy, with small additions of tin, iron, nickel, manganese, silicon, and other elements. These alloying elements are introduced to improve mechanical and corrosion-resistant properties and fluidity, deoxidize the weld metal, obtain a deposit which is free of slag inclusions or blow holes, reduce the tendency

to fume from overheating, and increase the hardness of the deposited metal for greater wear resistance. Although the amount of alloying elements is very small, the net effect on welding properties is very great.

RBCuZn-A (Naval Brass) welding rods contain about 1 per cent tin, which is added to improve strength and corrosion resistance. The electrical conductivity of welding rods conforming to this classification is about 25 per cent that of electrolytic copper; the thermal conductivity is about 30 per cent that of electrolytic copper. The rods are primarily used in braze-welding steel, cast iron, and malleable iron. They are also used for oxy-acetylene welding brass and braze-welding copper, bronze, and nickel alloys.

RCuZn-B (Low-Fuming Bronze, Nickel) welding rods are basically similar to RBCuZn-A but contain additions of iron and manganese which serve to increase the hardness and strength. In addition small amounts of silicon (0.15 per cent, max) serve to control the oxidation of the zinc, hence provide the "low-fuming" property. Nickel is also added (0.2 to 0.8 per cent) and its presence assures uniform distribution of the iron in the deposit. These welding rods are used primarily for braze-welding steel and cast iron and as a surfacing filler metal for building up wearing surfaces and bearings. (See the hardness chart in Table A of this guide.)

RCuZn-C (Low-Fuming Bronze) welding rods are similar to RCuZn-B in composition except that they do not contain nickel. They also contain the silicon which is effective in controlling the oxidation and fuming of the zinc, hence the name, low-fuming bronze. The weld metal has mechanical properties which are appreciably higher than those obtainable with RBCuZn-A welding rods and about equal to those obtainable with RCuZn-B welding rods. The low-fuming qualities, excellent usability, and good mechanical properties make this type a widely used general purpose copper-zinc welding rod.

RBCuZn-D (Nickel Bronze) rods differ from the other copper-zinc rods in their color, which is silver white. Because of the silicon content, these rods have low-fuming properties. The nickel content lowers their electrical conductivity to about 10 per cent of the conductivity of electrolytic copper. These rods are intended primarily for braze-welding steel and cast iron where the white color of the weld metal is a better color match than the yellow of the brasses.

RCuZn welding rods are used only for oxy-acetylene welding because their high zinc content makes them difficult to control with the other processes. A neutral or slightly oxidizing flame is used. For best results the puddle is kept slightly covered with an oxide film to prevent further oxidization of the weld metal. Preheating and interpass temperature control may be necessary. A backing may be desirable. Fluxing is essential. The most generally used type is in powder form. The welding rod is dipped into the flux periodically as required to properly protect the molten metal. Rods that have been flux coated during manufacture are also available and sometimes a liquid flux or a flame fluxing device is used. A square groove weld is used on thin sections; a single or double vee groove is used on thicker sections. Welding can be done in all positions. When using RCuZn rods, lead, if present in the base metal in amounts greater than 0.5 per cent, will probably cause difficulties. The lead, melting at a relatively low temperature, tends to boil out; porosity may result. Hence, the analysis of the base metal should be watched carefully.

Part VII.—Copper-Aluminum Welding Rods

RCuAl (Copper-Aluminum) Classifications.—Welding rods of these classifications are of the copper-aluminum-iron type containing deliberately added amounts of iron as an alloying element. The copper-aluminum-iron type is a duplex (two-phase) alloy. The deposits from the aluminum bronze welding rods are characterized by their relatively high mechanical properties: tensile strength, yield strength, and hardness.

RCuAl-A2 welding rods are used for joining aluminum bronzes of similar composition, high strength copper-zinc alloys, silicon bronzes, some copper-nickel alloys, ferrous metals, dissimilar metals, and for the repair of castings by the carbon-arc and inert-gas metal-arc processes. The rods are also used to provide bearing, wear- and corrosion-resistant surfaces.

RCuAl-B rods are used to weld annealed aluminum bronze plate, sheet, and strip with the carbon-arc and inert-gas metal-arc processes. The higher aluminum content of this classification is preferred because it produces a weld deposit having a duplex (two-phase) structure which has less tendency to crack in highly stressed weldments. These welding rods are also used for repair welding of castings and for depositing bearing, wear, and corrosion-resistant surfaces.

Because of the difficulty in handling the aluminum oxide with the conventional fluxes, these welding rods are not as a rule employed in the oxy-acetylene process.

When carbon-arc welding with all RCuAl rods d-c straight polarity is used, graphite electrodes, ground or filed to a conical taper, are preferred. Preheating is necessary. Preheat temperatures of 200 to 300 F are recommended for joining iron or nickel base metals and alloys, 300 to 400 F for bronzes, and 500 to 800 F for brasses. A backing of matching composition is desirable. Welding rods covered with a special flux must be used with this process as the very refractory aluminum oxides formed during welding must be thoroughly fluxed. Square groove welds are used for thin sections; single or double vee grooves are used for heavier sections. Welding is done in the flat position only.

Inert-gas arc welding with all RCuAl rods is done with either a-c or d-c straight polarity. Preheating is necessary; fluxing is not. A backing is desirable. Square groove welds are used for thin sections; single or double vee grooves are used for heavier sections. Welding is done in the flat position only.

SPECIFICATION FOR BRAZING FILLER METAL

SB-260

(IDENTICAL WITH ASTM SPECIFICATION B 260-56T EXCEPT THAT CLASSIFICATIONS BMg AND BAgMn HAVE BEEN DELETED)

Scope

1. This specification covers brazing filler metals.

Classification

2. The brazing filler metals are classified on the basis of their chemical composition as manufactured.

Manufacture

3. The brazing filler metals may be made by any method that will yield a product conforming to the requirements of this specification.

Chemical Composition

4. (*a*) The brazing filler metals shall conform to the chemical composition shown in Table I for the classification in which they are to be included.

(*b*) The method of chemical analysis shall conform to the requirements of "ASTM Methods of Chemical Analysis of Metals," latest edition.

Mechanical Properties

5. This specification does not cover the mechanical properties of either the filler metal or the joint.

Standard Forms, Sizes, and Tolerances

6. (*a*) Standard forms and sizes are as shown in Table II.

(*b*) Standard tolerances are as shown in Table III.

TABLE I.—CHEMICAL REQUIREMENTS.

NOTE 1.—Analysis shall be made for the elements for which specific values are shown in this table. If, however, the presence of other elements is indicated in the course of routine analysis, further analysis shall be made to determine that the total of these other elements is not present in excess of the limits specified for "other elements-total" in the last column in the table.

NOTE 2.—Single values shown are maximum percentages, except where otherwise specified.

ALUMINUM-SILICON

AWS-ASTM Classification	Silicon, per cent	Copper, per cent	Iron, per cent	Zinc, per cent	Magnesium, per cent	Manganese, per cent	Chromium, per cent	Titanium, per cent	Aluminum, per cent	Other Elements—Each, per cent	Other Elements—Total, per cent
BAlSi-1	4.0 to 6.0	0.30	0.80	0.10	0.05	0.05	...	0.20	remainder	0.05	0.15
BAlSi-2	6.8 to 8.2	0.25	0.80	0.20	...	...	...	...	remainder	0.05	0.15
BAlSi-3	9.3 to 10.7	3.3 to 4.7	0.80	0.20	0.15	0.15	0.15	...	remainder	0.05	0.15
BAlSi-4	11.0 to 13.0	0.30	0.80	0.20	0.10	0.15	...	...	remainder	0.05	0.15

COPPER-PHOSPHORUS

AWS-ASTM Classification	Phosphorus, per cent	Silver, per cent	Copper, per cent	Other Elements—Total, per cent
BCuP-1	4.75 to 5.25	...	remainder	0.15
BCuP-2	6.75 to 7.50	...	remainder	0.15
BCuP-3	5.75 to 6.70	4.75 to 6.25	remainder	0.15
BCuP-4	6.75 to 7.70	4.75 to 6.25	remainder	0.15
BCuP-5	4.75 to 5.25	14.50 to 15.50	remainder	0.15

SILVER

AWS-ASTM Classification	Silver, per cent	Copper, per cent	Zinc, per cent	Cadmium, per cent	Nickel, per cent	Tin, per cent	Other Elements—Total, per cent
BAg-1	44 to 46	14 to 16	14 to 18	23 to 25	...	...	0.15
BAg-1a	49 to 51	14.5 to 16.5	14.5 to 18.5	17 to 19	...	...	0.15
BAg-2	34 to 36	25 to 27	19 to 23	17 to 19	...	...	0.15
BAg-3	49 to 51	14.5 to 16.5	13.5 to 17.5	15 to 17	2.5 to 3.5	...	0.15
BAg-4	39 to 41	29 to 31	26 to 30	...	1.5 to 2.5	...	0.15
BAg-5	44 to 46	29 to 31	23 to 27	...	...	...	0.15
BAg-6	49 to 51	33 to 35	14 to 18	...	...	...	0.15
BAg-7	55 to 57	21 to 23	15 to 19	...	...	4.5 to 5.5	0.15
BAg-8	71 to 73	27 to 29	...	...	...	...	0.15
BAg-9	64 to 66	19 to 21	13 to 17	...	...	...	0.15
BAg-10	69 to 71	19 to 21	8 to 12	...	...	...	0.15
BAg-11	74 to 76	21 to 23	2.5 to 3.5	...	...	...	0.15

TABLE I.—CHEMICAL REQUIREMENTS (*Concluded*).

COPPER-GOLD

AWS-ASTM Classification	Gold, per cent	Copper, per cent	Other Elements—Total, per cent[a]
BCuAu-1	37.25 to 37.75	remainder	0.005
BCuAu-2	79.75 to 80.25	remainder	0.005

[a] These alloys shall not contain more than 0.005 per cent volatile impurities such as zinc or cadmium, and should be available oxygen-free, if so specified by the purchaser.

COPPER AND COPPER-ZINC

AWS-ASTM Classification	Copper (Including Silver), per cent	Zinc, per cent	Tin, per cent	Iron, per cent	Manganese, per cent	Nickel, per cent	Phosphorus, per cent	Lead, per cent	Aluminum, per cent	Silicon, per cent	Other Elements, Total, per cent[a]
BCu	99.90 min	...	...	...	...	...	0.075	0.02	0.01	...	0.10
RBCuZn-A[b]	57 to 61	remainder	0.25 to 1.00	*	*	...	...	0.05*	0.01*	*	0.50
RBCuZn-D[b]	46 to 50	remainder	...	...	...	9.0 to 11.0	0.25	0.05*	0.01*	0.04 to 0.25	0.50

[a] Total other elements, including the elements marked with an asterisk (*) shall not exceed the value specified.

[b] This AWS-ASTM classification is intended to be identical with the same classification that appears in the Specification for Copper and Copper-Alloy Welding Rods (AWS Designation A5.7; ASTM Designation B 259). Specification A5.7 is currently being revised to include this classification and is expected to be available shortly.

HEAT-RESISTING MATERIALS

AWS-ASTM Classification	Nickel, per cent	Chromium, per cent	Boron, per cent	Iron, per cent	Silicon, per cent	Carbon, per cent	Silver, per cent	Manganese, per cent	Other Elements—Total, per cent
BNiCr	65 to 75	13 to 20	2.75 to 4.75	[a]	[a]	[a]	...	...	0.50

[a] Total iron plus silicon plus carbon = 10.0 max.

Packaging

7. The brazing filler metals shall be suitably wrapped, boxed, or otherwise packaged to protect them against injury during shipment or under normal dry storage conditions.

Marking

8. (*a*) All packages containing rods, containers containing powder or formed shapes, and coils of wire or strip shall be legibly labeled or tagged with the following information:

(*1*) Classification,

(*2*) Manufacturer's name and trade designation,

(*3*) Size, length (if rods), and net weight.

(*b*) Wire and strip coils shall be identified at the inside and outside with the classification number. Individual packages of coils will be acceptable in lieu of this requirement.

Guarantee

9. The manufacturer shall guarantee that the brazing filler metals in all sizes and classifications conform to this specification. The manufacturer's responsibility shall be limited to replacement of any filler metal which does not conform to the requirements of this specification.

APPENDIX

GUIDE TO AWS-ASTM CLASSIFICATION OF BRAZING FILLER METALS

PART I.—INTRODUCTION

This guide is appended to the specification as a source of information; *it is not mandatory and does not form a part of the specification.* It has been prepared as an aid to users of brazing filler metals, to help them determine what classification of brazing filler metal is best for a particular job. For more detailed information on brazing, it is recommended that reference be made to the American Welding Society *Brazing Manual.*

Brazing filler metals, simply speaking, are metals that are added when making a braze. They have melting points below those of the metals being brazed; they have properties suitable for making joints between closely fitted surfaces by capillary attraction.

Brazing filler metals have become available in increasing numbers and now can be standardized into seven fairly well-defined groups of classifications. These include the silver, the copper and copper-zinc, the copper-phosphorus, the aluminum-silicon, the magnesium, the copper-gold, and the heat-resisting filler metals.

This specification is intended to provide both the manufacturer and the user of brazing filler metal with a means of production control and a basis of acceptance through mutually acceptable standard requirements. The specifica-

TABLE II.—STANDARD FORMS AND SIZES.

AWS-ASTM Classification	Standard Form	Size, in.
BAlSi-1	wire in coils, rod, 36-in. lengths	round, 3/32, 1/8, 5/32, 3/16, 1/4, 5/16
BAlSi-2[a]	sheet	0.010, 0.020
BAlSi-3	wire in coils, rod, 36-in. lengths	round, 1/16, 3/32, 1/8, 5/32, 3/16
	sheet	0.010, 0.020
BAlSi-4	wire in coils, rod, 36-in. lengths	round, 1/16, 3/32, 1/8, 5/32, 3/16
	sheet	0.010, 0.020
BCuP-1	strip	0.005, 0.010, 0.015 by 1 1/2
BCuP-2	wire in coils	round, 3/64, 1/16, 3/32
	rod	round, 1/16, 3/32, 1/8, 3/16, 1/4 by 18, or 36
		square, 1/8, 3/16, 1/4 by 36
	powder	100, 325 mesh
BCuP-3	wire in coils	round, 1/32, 3/64, 1/16, 3/32
	rod	round, 1/16, 3/32, 1/8, 3/16, 1/4 by 18, 20, or 36
		square, 3/32, 1/8, 3/16, 1/4 by 36
	powder	20, 100, 200, 325 mesh
BCuP-4	strip	0.005, 0.010, 0.015 by 1
	wire in coils	round, 1/32, 3/64, 1/16, 3/32
	rod	round, 1/16, 3/32, 1/8, 3/16, 1/4 by 18, 20, or 36
		square, 3/32, 1/8, 3/16, 1/4 by 36
	powder	20, 100, 200, 325 mesh
BCuP-5	strip	0.003, 0.005, 0.010, 0.025 by multiples of 1/4 up to 6
	wire in coils	round, 1/32, 3/64, 1/16, 3/32
	rod	round or square, 1/8, 3/16, 1/4 by 36
		rectangular, 0.050 by 1/8 or 1/16 by 20, 1/32 by 1/16 or 1/32 by 20
	powder	20, 100, 200, 325 mesh
BAg: all classifications	strip	0.003, 0.005, 0.010, 0.020 by multiples of 1/4 up to 6
	wire in coils	round, 1/32, 3/64, 1/16, 3/32
	powder	20, 100, 200, 325 mesh
BCuAu-1 and BCuAu-2	strip, wire in coils	to order
BCu, RBCuZn-A, RBCuZn-D	strip	There are no standard sizes. Sizes will be furnished according to customer requirements subject to mill limitations.
	rod	round, 1/32, 1/16, 3/32, 1/8, 5/32, 3/16, 1/4, 5/16, 3/8 by 18 or 36
	wire in coils	round, same as "strip" above
	powder	40, 80, 120, 200, and 325 mesh
BNiCr	wire in coils	round, 0.020, 1/32, 1/16, 1/8
	rod	round, 1/8 by 10
	strip	0.015 by 0.750, 0.020 by 0.300
	powder	325 mesh

[a] Coated on one or both sides; coating varies from 5 to 10 per cent of the thickness of the base metal sheet; several aluminum-alloy base metals are available.

TABLE III.—PERMISSIBLE VARIATIONS IN DIMENSIONS FOR WIRE, ROD, STRIP, AND SHEET

Size, in.	Permissible Variations, plus and minus, in.	
	Round	Square
Drawn wire:		
Diameter (Round) or Width (Square):		
0.010 to 0.020, incl.	0.0003	...
Over 0.020 to 0.030, incl.	0.0005	...
Over 0.030 to 0.040, incl.	0.0007	...
Over 0.040 to 0.050, incl.	0.0008	...
Over 0.050 to 0.060, incl.	0.0010	...
Over 0.060 to 0.080, incl.	0.0015	...
Over 0.080 to 0.250, incl.	0.0020	0.004
Drawn rod:		
Diameter (Round):		
5/32 and under	0.003	...
3/16 and over	0.004	...
Rolled or extruded rod and wire:		
Diameter (Round) or Width (Square):		
1/32 to 1/16, incl.	0.005	...
Over 1/16 to 1/8, incl.	0.006	...
Over 1/8 to 3/16, incl.	0.007	0.009
Over 3/16 to 1/4, incl.	0.008	0.010
	8 in. and Under in Width	Over 8 in. in Width
Strip or sheet:		
Thickness:		
0.006 and under	0.0006	standard strip and sheet tolerances apply
Over 0.006 to 0.013, incl.	0.0010	
Over 0.013 to 0.021, incl.	0.0015	
Over 0.021 to 0.026, incl.	0.0020	

TABLE II.—STANDARD FORMS AND SIZES.

AWS-ASTM Classification	Standard Form	Size, in.
BAlSi-1	wire in coils rod, 36-in. lengths	round, 3/32, 1/8, 5/32, 3/16, 1/4, 5/16
BAlSi-2[a]	sheet	0.010, 0.020
BAlSi-3	wire in coils rod, 36-in. lengths	round, 1/16, 3/32, 1/8, 5/32, 3/16
	sheet	0.010, 0.020
BAlSi-4	wire in coils rod, 36-in. lengths	round, 1/16, 3/32, 1/8, 5/32, 3/16
	sheet	0.010, 0.020
BCuP-1	strip	0.005, 0.010, 0.015 by 1 1/2
	wire in coils	round, 3/64, 1/16, 3/32
BCuP-2	rod	round, 1/16, 3/32, 1/8, 3/16, 1/4 by 18, or 36 square, 1/8, 3/16, 1/4 by 36
	powder	100, 325 mesh
	wire in coils	round, 1/32, 3/64, 1/16, 3/32
BCuP-3	rod	round, 1/16, 3/32, 1/8, 3/16, 1/4 by 18, 20, or 36 square, 3/32, 1/8, 3/16, 1/4 by 36
	powder	20, 100, 200, 325 mesh
	strip	0.005, 0.010, 0.015 by 1
	wire in coils	round, 1/32, 3/64, 1/16, 3/32
BCuP-4	rod	round, 1/16, 3/32, 1/8, 3/16, 1/4 by 18, 20, or 36 square, 3/32, 1/8, 3/16, 1/4 by 36
	powder	20, 100, 200, 325 mesh
	strip	0.003, 0.005, 0.010, 0.025 by multiples of 1/4 up to 6
	wire in coils	round, 1/32, 3/64, 1/16, 3/32
BCuP-5	rod	round or square, 1/8, 3/16, 1/4 by 36 rectangular, 0.050 by 1/8 or 1/16 by 20, 1/32 by 1/16 or 1/32 by 20
	powder	20, 100, 200, 325 mesh
BAg: all classifications	strip	0.003, 0.005, 0.010, 0.020 by multiples of 1/4 up to 6
	wire in coils	round, 1/32, 3/64, 1/16, 3/32
	powder	20, 100, 200, 325 mesh
BCuAu-1 and BCuAu-2	strip wire in coils	to order
BCu, RBCuZn-A, RBCuZn-D	strip	There are no standard sizes. Sizes will be furnished according to customer requirements subject to mill limitations.
	rod	round, 1/32, 1/16, 3/32, 1/8, 5/32, 3/16, 1/4, 5/16, 3/8 by 18 or 36
	wire in coils	round, same as "strip" above
	powder	40, 80, 120, 200, and 325 mesh
BNiCr	wire in coils	round, 0.020, 1/32, 1/16, 1/8
	rod	round, 1/8 by 10
	strip	0.015 by 0.750, 0.020 by 0.300
	powder	325 mesh

[a] Coated on one or both sides; coating varies from 5 to 10 per cent of the thickness of the base metal sheet; several aluminum-alloy base metals are available.

TABLE III.—PERMISSIBLE VARIATIONS IN DIMENSIONS FOR WIRE, ROD, STRIP, AND SHEET

Size, in.	Permissible Variations, plus and minus, in.	
	Round	Square
Drawn wire:		
Diameter (Round) or Width (Square):		
0.010 to 0.020, incl.	0.0003	...
Over 0.020 to 0.030, incl.	0.0005	...
Over 0.030 to 0.040, incl.	0.0007	...
Over 0.040 to 0.050, incl.	0.0008	...
Over 0.050 to 0.060, incl.	0.0010	...
Over 0.060 to 0.080, incl.	0.0015	...
Over 0.080 to 0.250, incl.	0.0020	0.004
Drawn rod:		
Diameter (Round):		
5/32 and under	0.003	...
3/16 and over	0.004	...
Rolled or extruded rod and wire:		
Diameter (Round) or Width (Square):		
1/32 to 1/16, incl.	0.005	...
Over 1/16 to 1/8, incl.	0.006	...
Over 1/8 to 3/16, incl.	0.007	0.009
Over 3/16 to 1/4, incl.	0.008	0.010
	8 in. and Under in Width	Over 8 in. in Width
Strip or sheet:		
Thickness:		
0.006 and under	0.0006	standard strip and sheet tolerances apply
Over 0.006 to 0.013, incl.	0.0010	
Over 0.013 to 0.021, incl.	0.0015	
Over 0.021 to 0.026, incl.	0.0020	

tion classifies only those filler metals in common use at the time of issue. Other brazing filler metals were omitted since their volume of use was not considered sufficient to warrant inclusion. As usage increases some of these may be included in later revisions of this specification.

The seven basic groups of classifications of brazing filler metal are identified, as shown in Table I of this specification, by the principal element or elements in their chemical composition. In a typical example, such as BCuP-2, for instance, the

B is for brazing filler metal (like the *E* is for electrodes and the *R* for welding rods in other AWS-ASTM specifications). The *RB* in RBCuZn-A and RBCuZn-D indicates that the filler metal is suitable as a welding rod and as a brazing filler metal.

CuP is for copper-phosphorus, the two principal elements in this particular brazing filler metal. (In a similar way, in other brazing filler metals, *Si* is for silicon, *Ag* for silver, etc., using standard chemical symbols.)

The numeral *2* is for one particular chemical analysis within a group (*1* is another analysis within the same group, *3* another, etc.).

In this guide solidus and liquidus are specified instead of melting and flow points. This is done to avoid confusion. The terms solidus and liquidus are well established in metallurgical usage. Their definitions are as follows:

Solidus.—The highest temperature at which the metal is completely solid; in other words, the temperature at which melting starts.

Liquidus.—The lowest temperature at which the metal is completely liquid; in other words, the temperature at which freezing starts.

Note that the solidus and liquidus for a particular metal are definite and fixed. On the other hand melting point and flow point tend to be ambiguous. In general practice, these terms are defined as follows:

TABLE A.—SOLIDUS, LIQUIDUS, AND BRAZING TEMPERATURE RANGES.[a]

AWS-ASTM Classification	Solidus, deg Fahr	Liquidus, deg Fahr	Brazing Temperature Range, deg Fahr
Aluminum-silicon:			
BAlSi-1	1070	1165	1150 to 1185
BAlSi-2	1070	1135	1120 to 1140
BAlSi-3	970	1085	1060 to 1185
BAlSi-4	1070	1080	1090 to 1185
Copper-phosphorus:			
BCuP-1	1305	1650	1450 to 1700
BCuP-2	1305	1485	1350 to 1550
BCuP-3	1190	1480	1300 to 1550
BCuP-4	1190	1330	1300 to 1500
BCuP-5	1185	1500	1300 to 1500
Silver:			
BAg-1	1125	1145	1145 to 1400
BAg-1a	1160	1175	1175 to 1400
BAg-2	1125	1295	1295 to 1550
BAg-3	1170	1270	1270 to 1500
BAg-4	1240	1435	1435 to 1650
BAg-5	1250	1370	1370 to 1550
BAg-6	1270	1425	1425 to 1600
BAg-7	1145	1205	1205 to 1400
BAg-8	1435	1435	1435 to 1650
BAg-9	1280	1325	1325 to 1550
BAg-10	1335	1390	1390 to 1600
BAg-11	1365	1450	1450 to 1650
Copper-gold:			
BCuAu-1	1755	1815	1815 to 2000
BCuAu-2	1620	1630	1630 to 1850
Copper and copper-zinc			
BCu	1980	1980	2000 to 2100
RBCuZn-A	1630	1650	1670 to 1750
RBCuZn-D	1690	1715	1720 to 1800
Heat-resistant:			
BNiCr	1850	1950	2000 to 2150

[a] Solidus and liquidus shown are for the nominal composition in each classification.

Melting point.—The temperature below which an alloy is substantially solid.

Flow point.—The temperature above which the alloy is liquid and will run or flow.

However, these definitions are at times not followed and also are not in themselves very definite. Hence, solidus and liquidus are preferred. Table A in this Guide lists the solidus, liquidus, and also the recommended brazing temperature range for the various brazing filler metals.

When brazing with some brazing filler metals (particularly those with a wide temperature range between solidus and liquidus), the several constituents of the filler metals tend to separate during the melting process. The lower melting constituent will flow, leaving behind a "skull" of the high-melting constituent. This occurrence, called *liquation*, is undesirable since the unmelted skull does not contribute significantly to the actual brazed joint; it does not flow into the joint. However, where fit-up is not too good, a filler metal with a wide temperature range will usually fill the joint more easily.

When brazing with any of the various processes, prebraze cleaning of the base metal is essential. The surface should be free from grease, oxides, scale, and dirt of any kind. Cleaning can be done chemically or mechanically. Grease or oil can be removed by a reliable degreasing solution such as trichloroethylene or trisodium phosphate. Oxides should be removed by a chemical bath or mechanically with a fine emery after degreasing. Steel grit blasting, shotblasting, or grinding with a fine wheel can be used to remove surface scale.

PART II.—OPERATING CHARACTERISTICS AND USABILITY

BAlSi (Aluminum-Silicon) Classifications.—Brazing filler metals of the BAlSi classifications are used for joining the following grades of aluminum and aluminum alloys: 1100, 3003, 3004, 5250, 6951, 6053, 6061, 6062, 6063 (formerly designated as 2S, 3S, 4S, B50S, J51S, 53S, 61S, 62S, 63S) and cast alloys A612 and C612. The *BAlSi-1, -2 and -3* filler metals are most suitable for brazing with the furnace and dip processes; the *BAlSi-4* filler metal is most suitable for the torch brazing process, but can be used with the furnace and dip processes. These filler metals are also used to a limited extent with the other brazing processes. They are generally used with lap-type joints rather than butt-type joints.

Clearances of 0.006 to 0.010 in. are common for laps less than ¼ in. long; clearances up to 0.025 in. are used for longer laps. Fluxing is essential for all processes. After brazing, the brazed parts must be cleaned thoroughly. Immersion in boiling water generally will remove the residue; if this is not adequate the parts are usually immersed in a concentrated nitric acid solution and then rinsed thoroughly.

BAlSi-1 brazing filler metal is a general purpose metal.

BAlSi-2 brazing filler metal is available only as coating on 3S and J51S aluminum alloy core sheet, coated on one or both sides.

BAlSi-3 brazing filler metal is a general-purpose metal.

BAlSi-4 brazing filler metal is a general-purpose metal used in some cases for its relatively high corrosion-resistant properties.

BCuP (Copper-Phosphorus) Classifications.—Brazing filler metals of the BCuP classifications are used primarily for joining copper and copper alloys with some limited use on silver, tungsten, and molybdenum. Because of the phosphorus content, these filler metals should not be used on ferrous metals. Their use on alloys containing more than 10 per cent nickel should also be avoided for the same reason. They are suitable for all brazing processes. Lap- and butt joints are generally used. These filler metals have self-fluxing properties when used on copper; however, a flux is recommended when used on all other metals, including the copper alloys. Joints made with these filler metals on copper have excellent electrical and thermal conductivities. Corrosion resistance is generally equal to, or better than, that of the base metal joined; however, they are not recommended for use in sulfurous atmospheres above room temperature.

These filler metals also have a tendency to liquate if heated slowly. It is important, therefore, especially if the filler metal is preplaced, to heat as rapidly as possible. The color after brazing is light gray. Immersion in 10 per cent sulfuric acid will restore the copper color.

It will be noted in Table A that the brazing temperature ranges begin below the liquidus. It is a basic principle in brazing that the lowest temperature within the recommended range be used, consistent with the joint clearance and the time needed to complete the braze. This in turn will depend on (*1*) the materials joined, (*2*) the brazing process employed, and (*3*) the joint design used.

BCuP-1 brazing filler metal is used primarily for preplacing in the joint and is suited particularly for resistance brazing and some furnace-brazing applications. This filler metal is somewhat more ductile than the other BCuP filler metals containing more phosphorus. It is also less fluid at brazing temperature. Joint clearances should be from 0.002 to 0.005 in.

BCuP-2 filler metal is extremely fluid at brazing temperatures and will penetrate joints with very little clearance. Best results are obtained with clearances of 0.001 to 0.003 in.

BCuP-3 filler metal is also extremely fluid at brazing temperatures. Joint clearances of 0.002 to 0.005 in. are recommended.

BCuP-4 filler metal is best used with joint clearances of 0.001 to 0.003 in.

BCuP-5 filler metal is particularly suitable for use where very close fits cannot be held. Joint clearances of 0.003 to 0.005 in. are recommended.

BAg (Silver) Classifications.—Brazing filler metals of the BAg classifications are used for joining all ferrous and nonferrous metals except aluminum, magnesium, and some other metals melting below 1500 F. There are many applications where these filler metals are used in the refrigeration and electrical equipment fields; they are also much used in making automobiles, some household goods, and plumbing and heating fixtures. They are used with all brazing processes. They are generally rapid-melting and free-flowing. Since they are so easily formed, they are available in various convenient forms for preplacing in a joint to be brazed. Lap-type joints are recommended but butt-type joints may be used if requirements are less stringent. Clearances should be between 0.002 and 0.005 in. for proper capillary attraction. Flux is generally required; however, if brazing is done in a vacuum or an inert atmosphere, flux is not needed. This latter is the case, for instance, when using *BAg-8* filler metal for brazing electron tubes.

BAg-1 and *-1a* brazing filler metal is free-flowing and also has other qualities making it well suited for general-purpose work. Its melting range is very narrow. The color after brazing is light yellow.

BAg-2 filler metal is, like *BAg-1*, free-flowing and suited for general-purpose work. Its broader melting range is helpful where clearances are not uniform, but, unless heating is rapid, care must be taken that the lower melting constituents do not separate out by liquation. The color after brazing is a light yellow.

BAg-3 filler metal is used for joining stainless steel as it produces corrosion resisting joints. It is used also for joining carbide tool tips to tool shanks as it wets the carbide well. It has a wide melting range and is not as free flowing as *BAg-1* and *-2* are; it is a good metal for bridging gaps or forming fillets. Color after brazing is whitish yellow.

BAg-4 filler metal is, like *BAg-3*, used extensively for carbide tip brazing. It is freer flowing than *BAg-3*. The color after brazing is light yellow.

BAg-5 and *-6* filler metals are used particularly for brazing in the electrical industry. They are also used in the dairy and food industries where the use of cadmium-containing alloys might be prohibited. *BAg-6* has a wide melting range and is not as free flowing as *BAg-1* and *-2*; it is a good metal for bridging gaps or forming fillets.

BAg-7 filler metal is a general-purpose, low-melting metal used particularly for furnace brazing. Its whitish color after brazing makes it suitable for joining whitish metals like stainless steel. It is much used by the dairy and food industries.

BAg-8 filler metal is used primarily in the assembling of electronic and vacuum tubes. The metal is generally free-flowing. However, it does not flow well on ferrous metals. The color after brazing is white.

BAg-9, *-10* and *-11* filler metals are used particularly for joining sterling silver. These three metals have different brazing temperatures and so can be used for step brazing of consecutive joints. The color after brazing is whitish.

BCuAu (Copper-Gold) Classifications.—Brazing filler metals of the BCuAu classifications are primarily used for joining parts in electron tube assemblies where gaseous inclusions are particularly undesirable. Their low vapor pressure makes them particularly suited for this work. In electron tube applications these filler metals are usually applied by induction, furnace, or resistance brazing in a reducing atmosphere or in a vacuum, and with no flux. For other applications, a borax-boric acid flux is used. The two BCuAu filler metals permit variation in brazing temperature so that step brazing can be used.

BCu and RBCuZn (Copper and Copper-Zinc) Classification.—Brazing filler metals of the BCu and RBCuZn classifications are used for joining various ferrous and nonferrous metals. They can also be used with various brazing processes. Lap- and butt-type joints are commonly used.

BCu brazing filler metal is used for joining ferrous metals, nickel, and copper-nickel alloys. It is very free-flowing. It is much used in furnace brazing, using a hydrogen or dissociated ammonia atmosphere and generally no flux. On metals that have constituents with difficult-to-reduce oxides (chromium, manganese, silicon, titanium, vanadium, aluminum, zinc), however, a flux may be required.

With the *RBCuZn* filler metals, overheating must be guarded against since voids may be formed in the joint by entrapped zinc vapors. Corrosion resistance of *RBCuZn* filler metals is generally inadequate for joining copper, silicon bronze, copper-nickel, or stainless steel base metals.

RBCuZn-A (formerly BCuZn-2) brazing filler metal is used on steels, copper, copper alloys, nickel, nickel alloys, and stainless steel. It is used with the torch, furnace, and induction processes. Fluxing is required. A borax-boric acid flux is commonly used. Joint clearances from 0.002 to 0.005 in. are suitable.

RBCuZn-D (formerly BCuZn-6) brazing filler metal (called white brass; formerly called nickel silver) is used with steels, nickel, and nickel alloys. It can be used with all brazing processes.

BNiCr (Heat-Resistant) Classifications.—Brazing filler metal of the BNiCr heat-resistant classification is used chiefly for joining stainless steels and high nickel alloys to be used at elevated temperatures, as in jet engines. It also can be used on carbon and low-alloy steels. *BNiCr* filler metal retains its heat-resistant properties at temperatures up to 2000 F. It has excellent corrosion-resistant properties, also. It is used primarily for brazing in a controlled dry hydrogen atmosphere furnace, where no flux is required. It can be used in a controlled standard atmosphere furnace, but then flux is required.

SPECIFICATION FOR ALUMINUM AND ALUMINUM-ALLOY WELDING RODS AND BARE ELECTRODES

SB-285

(IDENTICAL WITH ASTM SPECIFICATION B 285-57T)

Scope

1. This specification is for aluminum and aluminum-alloy welding rods for use with the gas, carbon-arc, atomic hydrogen and inert-gas metal-arc (nonconsumable electrode) welding processes and bare electrodes for use with inert-gas metal-arc (consumable electrode) welding process.

PART I.—CLASSIFICATION AND ACCEPTANCE

Classification

2. (*a*) The welding rods and electrodes are classified on the basis of their chemical composition as manufactured and their usability.

(*b*) Any filler metal classified under one classification shall not be classified under any other classification.

Manufacture

3. The welding rods and electrodes may be made by any method that will yield a uniform product conforming to the requirements of this specification.

Acceptability

4. (*a*) Chemical composition and usability tests shall be performed when and as prescribed by the manufacturer.

(*b*) At the option and expense of the purchaser either or both of the foregoing tests may be used as a basis for acceptance of the welding rods or electrodes.

Chemical Composition

5. The welding rods and electrodes shall conform to the chemical composition shown in Table I for the classification in which they are to be included.

Usability Test

6. In order to demonstrate the usability of the filler metal and the soundness of weld metal deposited therefrom, the following tests shall be performed:

(1) For welding rods, a weld bead test as prescribed in Section 18, and

(2) For electrodes, an X-ray test as prescribed in Section 19.

Usability Test Results

7. (*a*) *Welding Rods.*—The welding rod shall flow freely and uniformly without sputtering or other irregularities and shall produce a weld bead of uniform appearance and form free from deleterious defects.

(*b*) *Electrodes.*—Cracks, incomplete fusion and porosity, the latter of which is in excess of that shown in the X-Ray Standard[3] are cause for rejection of electrodes.

[3] This X-Ray Standard is available on film, from the American Welding Society, 33 W. 39th St., N. Y. 18, N. Y., or the American Society for Testing Materials, 1916 Race St., Philadelphia 3, Pa. The price of the X-ray Standard is $2.25.

Retests

8. If an electrode or welding rod fails the specified test, two additional tests shall be conducted and the results shall meet the requirements of Section 7.

Standard Sizes and Lengths

9. (*a*) Welding rods shall be available in straight lengths and coils and wound on rims and spools. Electrodes shall be available wound on rims and spools.

(*b*) *Welding Rods in Straight Lengths and in Coils:*

(*1*) Standard sizes are as follows:

Form	Standard Sizes, Diameter or Distance Between Flat Surfaces, in.[a]
Round (wrought and cast)	1/16, 3/32, 1/8, 5/32, 3/16, 1/4
Square and hexagonal (cast only)	3/32, 1/8, 5/32, 3/16, 1/4

[a] The diameter of wrought rods shall not vary from the nominal by more than 0.0015 in. Cross-sectional dimensions of cast rods are approximate only.

(*2*) Standard lengths are as follows:

Form	Standard Length, in.[a]
Wrought	36
Cast	12, 18, 24, 36

[a] For wrought rod the length shall not vary more than ±3/8 in. and for cast rod more than ±1/2 in. from the nominal.

(*c*) *Electrodes and Welding Rods Wound on Rims and Spools:*

(*1*) Standard sizes are 0.020, 0.030, $\frac{3}{64}$, $\frac{1}{16}$, $\frac{3}{32}$ and $\frac{1}{8}$ in. in diameter.

(*2*) The diameter shall not vary from the nominal by more than +0.001 in. or −0.002 in.

(*3*) Rims and spools shall have one continuous length of welding rod or electrode per rim or spool.

Finish and Temper

10. (*a*) *Finish.*—All welding rods and electrodes shall have a smooth finish, free from slivers, depressions, scratches, or foreign matter that would adversely affect the welding properties or the operation of the welding equipment.

(*b*) *Temper:*

(*1*) Temper of cast welding rods shall be "as cast."

(*2*) Temper of wrought welding rods may be either annealed, as extruded, or hard drawn as specified by the purchaser.

(*3*) Temper of electrodes shall be suitable for uniform feeding on automatic or semi-automatic welding equipment as specified.

Rim, Spool and Winding Requirements

11. (*a*) If rims are used, they shall have an inside diameter of 12 in., plus 0 and minus $\frac{1}{8}$ in., and a width of 3 in., plus $\frac{3}{16}$ and minus 0 in., unless otherwise specified. Rims shall be of such material and thickness as to provide adequate strength and rigidity to prevent damage or distortion in normal handling or use. Rims shall be sufficiently clean and dry to maintain the cleanliness of the welding rod or electrode.

(*b*) If spools are used, spool dimensions shall be as shown in Fig. 1, unless otherwise specified. Barrel diameter, *B*, shall be such as to permit proper feeding of the electrode. Spools shall be of such material and thickness as to provide adequate strength and rigidity to prevent damage or distortion in normal handling or use. Spools shall be designed so that the filler metal is insulated from ground. Spools shall be sufficiently clean and dry to maintain the cleanliness of the welding rod or electrode.

(*c*) The welding rod and electrode shall be wound so as to avoid producing kinks, waves or sharp bends and so that they are free to unwind without restriction caused by overlapping or wedging.

(*d*) The outermost layer of the spooled welding rod or electrode shall not extend beyond the outside diameter of the flanges.

Packaging

12. (*a*) Filler metal shall be suitably packaged to insure against injury during shipping or storage under normal conditions.

(*b*) *Welding Rods in Straight Lengths:*

(*1*) Standard size packages shall be 5, 10, 25 and 50 lb net weight.[4]

(*2*) Not more than one classification or size shall be included in each package.

(*c*) *Welding Rods in Coils.*—Standard size coils shall be 25 and 50 lb net weight.[5]

(*d*) *Welding Rods and Electrodes Wound on Rims and on Spools.*—Standard size rims and spools shall be 5, 10 and 20 lb net weight.[5]

TABLE I.—CHEMICAL REQUIREMENTS.

NOTE 1.—Analysis shall be made for the elements for which specific values are shown in this table. If, however, the presence of other elements is indicated in the course of routine analysis, further analysis shall be made to determine that the total of these other elements is not present in excess of the limits specified for "other elements" in the last column in the table.

NOTE 2.—Single values shown are maximum percentages, except where a minimum or an inclusive range is specified.

AWS-ASTM Classification	Aluminum, per cent	Copper, per cent	Iron, per cent	Silicon, per cent	Manganese, per cent	Magnesium, per cent	Zinc, per cent	Chromium, per cent	Titanium, per cent	Nickel, per cent	Other Elements,[f] per cent	
											Each	Total
ER1060	99.6 min by difference	0.05	0.35	0.25	0.03	0.03	0.05	not specified	0.03	not specified	0.03	0.15
ER1100	99.0 min by difference	0.20	[b]	[b]	0.05	not specified	0.10	not specified	not specified	not specified	0.05	0.15
R-C4A[a]	remainder	4.0 to 5.0	1.0	1.5	0.35	0.03	0.35	not specified	0.25	not specified	0.05	0.15
R-CN42A[a]	remainder	3.5 to 4.5	1.0	0.7	0.35	1.2 to 1.8	0.35	0.25	0.25	1.7 to 2.3	0.05	0.15
ER2014	remainder	3.9 to 5.0	1.0	0.50 to 1.2	0.40 to 1.2	0.20 to 0.8	0.25	0.10	0.15	not specified	0.05	0.15
ER5050	remainder	0.20	0.7	0.40	0.10	1.0 to 1.8	0.25	0.10	not specified	not specified	0.05	0.15
ER5356	remainder	0.10	[c]	[c]	0.05 to 0.20	4.5 to 5.5	0.10	0.05 to 0.20	0.06 to 0.20	not specified	0.05	0.15
ER5052	remainder	0.10	[c]	[c]	0.10	2.2 to 2.8	0.20	0.15 to 0.35	not specified	not specified	0.05	0.15
ER5154	remainder	0.10	[c]	[c]	0.10	3.1 to 3.9	0.20	0.15 to 0.35	0.20	not specified	0.05	0.15
ER5254	remainder	0.05	[c]	[c]	0.01	3.1 to 3.9	0.20	0.15 to 0.35	0.05	not specified	0.05	0.15
ER3004	remainder	0.20	0.7	0.30	1.0 to 1.5	0.8 to 1.3	0.10	not specified	not specified	not specified	0.05	0.15
R-S5B[a]	remainder	0.6	0.8	4.5 to 6.0	0.50	0.05	0.50	0.25	0.25	not specified	....	0.35
ER4043	remainder	0.30	0.8	4.5 to 6.0	0.05	0.05	0.10	not specified	0.20	not specified	0.05	0.15
R-SC51A[a]	remainder	1.0 to 1.5	0.8[d]	4.5 to 5.5	0.50[d]	0.40 to 0.6	0.35	0.25	0.25	not specified	0.05	0.15
R-SG70A[a]	remainder	0.25	0.6	6.5 to 7.5	0.35	0.20 to 0.40	0.35	not specified	0.25	not specified	0.05	0.15
R-ZG61A[a]	remainder	0.30	1.0	0.25	0.30	0.50 to 0.65	5.2 to 6.0	0.40 to 0.6	0.10 to 0.25	not specified	0.05	0.25

[a] For repair of castings.
[b] Iron plus silicon shall not exceed 1.0 per cent.
[c] Iron plus silicon shall be 0.45 per cent, max.
[d] If iron exceeds 0.45 per cent, the manganese should be present in an amount equal to one half the iron.
[e] Iron plus silicon shall be 0.50 per cent, max.
[f] Beryllium shall be 0.0008 per cent, max.

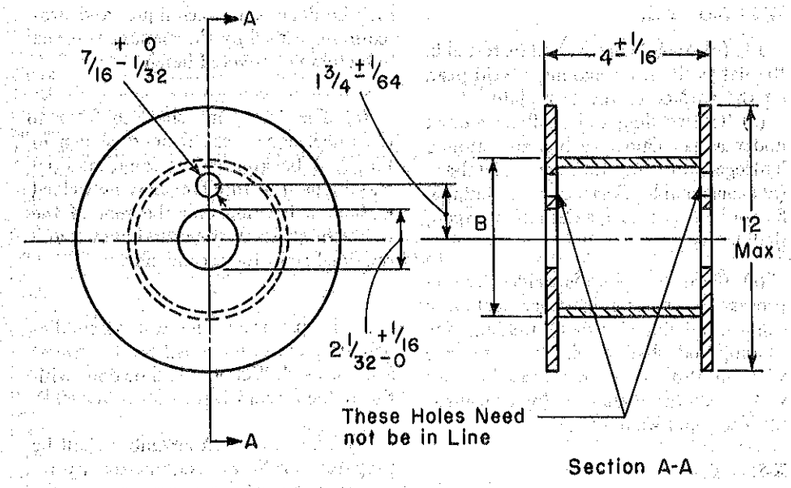

Note: All Dimensions in Inches

FIG. 1.—Standard Spool Dimensions.

(*b*) Usability tests shall be made using electrodes and welding rods of all sizes. If a filler metal satisfactorily meets the X-ray test, when used as an electrode, it need not be tested as a welding rod. If a filler metal satisfactorily meets the weld bead test when used as a welding rod it shall be tested as an electrode for classification as an electrode.

Chemical Analysis

16. The chemical analysis shall be made in accordance with the latest edition of the Standard Methods for Chemical Analysis of Aluminum and Aluminum-Base Alloys (ASTM Designation: E 34), or by any other approved method agreed upon by the manufacturer and the purchaser. The analysis may be made spectrographically, provided that, in case of dispute, the results secured by Methods E 34 shall be the basis for acceptance.

Marking

13. (*a*) All boxes or cartons containing straight length welding rods shall be legibly marked with the following information:

(*1*) Classification and specification number,

(*2*) Manufacturer's name, trade designation and lot number,

(*3*) Size, length and net weight, and

(*4*) Applicable processes (Section 18(*c*)).

(*b*) All packages containing coils, rims or spools shall be legibly marked with the following information:

(*1*) Classification and specification number,

(*2*) Manufacturer's name, trade designation and lot number,

(*3*) Size and net weight, and

(*4*) Applicable processes (Section 18(*c*)).

(*c*) Welding rod in straight lengths $\frac{1}{8}$ in. and larger in diameter shall be marked with the classification number.

(*d*) Coiled welding rod shall be flattened or tagged at both ends. These ends shall be marked with the classification number.

(*e*) Rims and at least one flange of all spools shall be legibly marked with the classification and specification number, size and net weight.

Guarantee

14. The manufacturer shall guarantee that the welding rods and electrodes in all sizes and classifications conform to this specification. The manufacturer's responsibility shall be limited to replacement of any welding rods or electrodes that do not conform to the requirements of this specification.

PART II.—DETAILS OF TESTS

General

15. (*a*) The tests specified in Sections 5 and 6 shall be conducted in accordance with the requirements of Sections 16 to 19, incl, of this Part II.

Materials for Test Plates

17. (*a*) For welding rods, the base metal to be used for the test plate for the

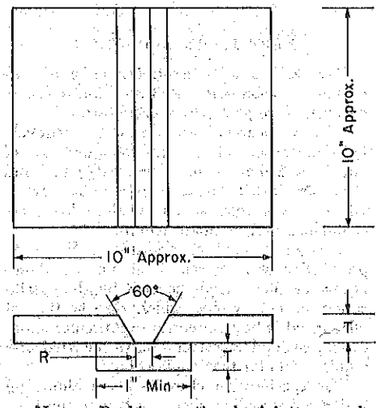

NOTE.—Backing optional; joint may be welded without backing with root of weld chipped out to sound metal and rewelded from second side.

Electrode Diameter, in.	Plate Thickness, T, in.	Max. Root Spacing, R, in.	Welding Position
0.020	3/32	1/4	Overhead
0.030, 3/64	1/4	1/4	Overhead
1/16, 3/32	3/8	3/8	Overhead
1/8	3/8	1/2	Flat

FIG. 2.—X-Ray Test Assembly.

[4] Net weights shall be within 10 per cent of the nominal weight.

[5] Net weights shall be within 20 per cent of the nominal weight.

weld bead test shall conform to alloy M1A or Clad M1A or 990A of the Specification for Aluminum and Aluminum Alloy Sheet and Plate for Pressure Vessel Applications (ASTM Designation: B 178). Alternatively, the base metal may be of the alloy of the welding rod being tested.

(*b*) For electrodes, the base metal to be used for the test plates for the X-ray test shall be as follows:

AWS-ASTM Classification	Base Metal Designation
ER1060, ER1100	996A, 990A or M1A
ER2014	CS41A or Clad CS41A
ER5050	G1A or M1A
ER5356, ER5052, ER5154, ER5254	GR40A, MG11A or GR20A
ER3004	MG11A or GR40A
ER4043	M1A, GS11A or Clad GS11A

Weld Bead Test

18. (*a*) Welding rods shall be tested in the flat position by making a weld bead on the surface of the test plate.

(*b*) The welding rod shall be melted under a gas flame, carbon-arc, atomic hydrogen arc or inert-gas metal-arc (nonconsumable electrode). A suitable flux or inert gas, such as helium or argon, shall be used.

(*c*) If the test plate is welded by any process other than inert-gas metal-arc (nonconsumable electrode) welding, the welding rod shall be classified for use with all three other processes but not with inert-gas metal-arc (nonconsumable electrode) welding.

X-Ray Test

19. (*a*) Welding of the test plates shall be done using techniques and procedures specified by the manufacturer as to factors not covered herein.

(*b*) The test joint shall conform to the dimensional requirements shown in Fig. 2. A backing of the same material may be used or the joint may be welded without a backing and the root of the weld chipped out to sound metal and rewelded from the second side.

(*c*) In preparing the test assemblies neither preheat nor postheat treatment shall be used. Welding shall be done with the ambient temperature not below 60 F.

(*d*) The completed assembly shall be prepared for X-ray examination by removal of the weld reinforcement and the backing.

APPENDIX

GUIDE TO AWS-ASTM CLASSIFICATION OF ALUMINUM AND ALUMINUM-ALLOY WELDING RODS AND ELECTRODES

Part I.—Introduction

This guide is appended to the specification as a source of information: it is not mandatory and does not form a part of the specification.

The specification itself is intended to provide both the manufacturer and the purchaser of aluminum and aluminum-alloy welding rods and electrodes with a means of production control and a basis of acceptance through mutually acceptable, sound, standard requirements.

This guide has been prepared as an aid to prospective users of the aluminum and aluminum-alloy filler metals covered by the specification in determining which classification of filler metal is best suited for a particular application, with due consideration to the particular requirements for that application.

The specification classifies those aluminum and aluminum-alloy filler metals used most extensively at the time of issuance of the specification. It is recognized that supplementary tests may be necessary to determine the suitability of these welding rods and electrodes for applications involving properties not considered in this specification. In such cases, additional tests to determine such specific properties as bearing performance, corrosion resistance, mechanical properties at low and high temperatures, wear resistance and suitability for welding combinations of dissimilar metals may be conducted upon agreement between the manufacturer and the purchaser.

Both welding rods and electrodes are classified on the basis of chemistry, which is the composition of the alloy used in the rod or electrode. Acceptance of a given batch of filler metal is based on chemical analysis to establish that its composition is within the range listed in Table I of the specification and on a usability test.

The AWS-ASTM classifications used in this specification are based on two systems as follows:

TABLE A.—CORRELATION OF CLASSIFICATIONS.

AWS-ASTM Classification	Previous Designation
ER1060	R-996A, E-996A
ER1100	R-990A, E-990A
R-C4A	Same
R-CN42A	Same
ER2014	R-CS41A, E-CS41A
ER5050	R-G1A, E-G1A
ER5356	replaced R-GM50A, E-GM50A
ER5052	R-GR20A, E-GR20A
ER5154	R-GR40A, E-GR40A
ER5254	None
ER3004	R-MG11A, E-MG11A
R-S5B	Same
ER4043	replaced E-S5B
R-SC51A	Same
R-SG70A	Same
R-ZG61A	Same

(*a*) For cast alloys, the standard nomenclature established in the Recommended Practices for Codification of Light Metals and Alloys, Cast and Wrought (ASTM Designation: B 275) is used with a prefix R.

(*b*) For wrought alloys, the Aluminum Association nomenclature is used with a prefix E or R.

The prefix R indicates that the material is suitable for use as a welding rod and the prefix E indicates suitability as an electrode. Since some of these filler metals are used as electrodes in inert-gas metal-arc (consumable electrode) welding and as welding rods in gas, carbon-arc, atomic hydrogen and inert-gas metal-arc (nonconsumable electrode) welding, both letters ER are also used. In all cases an electrode which meets the tests described in the specification can be used either as an electrode or a welding rod but the reverse is not necessarily true.

The correlation between the AWS-ASTM classifications used in this specification and the previous designations for these materials is indicated in Table A.

Part II.—Application of Filler Metal

The selection of the proper classification of filler metal depends primarily on the aluminum alloy used in the parts to be welded and secondly on the welding process, the geometry of the joints, the resistance to corrosion required in service and on the finish or appearance desired on the welded part. For example, welded vessels for holding hydrogen peroxide require special aluminum alloys, quite frequently a high purity alloy, in order to have good resistance to corrosion or to prevent contamination of the lading. In this case the proper choice of filler metal is an alloy which has at least as high a purity as the base metal. Another example is the foundry welding of castings, where an alloy meeting the composition limits of the casting is in most cases the best choice.

Experience has shown that certain classifications of filler metal are suitable for welding specific base metals and combinations of base metals. These are listed in Table B. Combinations other than those listed have not been explored. If it is desired to weld such other combinations, they should be evaluated as to suitability for the purpose intended. The alloy combinations listed will be suitable for most environments; some are preferable from one or more standpoints and, in the absence of specific information, consultation with the material supplier is recommended.

TABLE B.—GUIDE TO THE CHOICE OF FILLER METAL FOR WELDING.

AWS-ASTM Classification	ASTM Base Metal Designation	
	Base Metals	Base Metal Combinations
ER1060	996A	...
ER1100	990A, M1A, G1A and Clad M1A	990A to M1A, 990A to Clad M1A
R-C4A	C4A	...
R-CN42A	CN42A	...
ER2014	CS41A and Clad CS41A	...
ER5050	M1A, G1A and Clad M1A	...
ER5356	MG11A, GR20A, Clad MG11A, GS10A, GS42A, GS11A, and Clad GS11A	...
ER5052	MG11A, GR20A and Clad MG11A	...
ER5154	MG11A, GR20A, GS11A, Clad GS11A, Clad MG11A, GS10A, GS42A and GR40A	GR40A to GS11A GR20A to GS11A
ER5254	5254, 5652	...
ER3004	MG11A and Clad MG11A	...
R-S5B ER4043	M1A, MG11A, G1A, GR20A, GS11A, Clad M1A, Clad MG11A, S5A, SC51A, SG70A, GS11C, GS10A	990A to M1A, 990A to Clad M1A, M1A to GR20A, M1A to GS11A, Clad M1A to GR20A, Clad M1A to GS11A, GS11A to GS10A, GS11A to GS11C
R-SC51A	SC51A	...
R-SG70A	SG70A	...
R-ZG61A	ZG61A	...

Part III.—Welding Procedure for Welding Rods

Filler metal in the form of welding rod is used with a number of welding processes. These include gas welding, shielded carbon-arc welding, inert-gas metal-arc welding (nonconsumable electrode) and atomic hydrogen welding. The filler metal is usually fed by hand although mechanized welding in all these processes may involve either manual feeding of the welding rod or use of a feeding mechanism. A summary of the variables for these welding processes will be found in Table C.

The cleanliness and freedom from surface oxidation of the filler metal is important with all of these welding processes. It is universal practice to use a welding flux for all except the inert-gas metal-arc welding process. Excessive amounts of oil or other organic materials, as well as a heavy oxide film on the rod will slow up and interfere with coalescence of the weld. In view of this it is almost universal practice to clean the welding rod before packaging.

Proper storage of filler metal is essential to avoid contamination which may affect its performance. Packages of welding rod or electrode should not be left outdoors or in unheated buildings because the greater variations in temperature and humidity increase the possibility of condensation. Experience has demonstrated that undesirable storage conditions may adversely affect filler metal performance. Investigation of the effect of storage time on electrode performance indicates that packaged electrode stored under good conditions (dry places in heated buildings) is satisfactory after extended storage.

Contamination of the rod from handling or storage in the user's plant may occur. In most cases the contaminating influences will dictate the cleaning method. The practice of giving filler metal a rub with steel wool just before welding is quite widely followed if it has been exposed to the shop atmosphere for long periods of time.

TABLE C.—SUMMARY OF DATA FOR ALUMINUM AND ALUMINUM-ALLOY WELDING RODS AND ELECTRODES.

Welding Process	Flame Adjustment	Type of Current	Flux or Shielding	Flux Removal	Position	Edge Preparation	Thickness Limitations, in.	Preheat[b]
Gas welding: Oxy-acetylene Oxy-hydrogen Oxy-other fuel gas	neutral or slightly reducing	....	flux always used	Hot H_2O plus 5 min dip 10 per cent HNO_3 and 0.25 per cent HF plus H_2O rinse	flat vertical horizontal	*Up to 1/8 in.*, none *1/8 in. and over*, 90 deg. Vee—single or double welded	0.051 to 1.0	optional
Carbon arc and atomic hydrogen	....	ac or dc					0.051 to 0.50	optional
Inert-gas metal-arc (nonconsumable electrode) welding[a]	....	ac	argon or helium	none	flat vertical horizontal overhead	*Up to 1/8 in.*, none *1/8 in. and over*, 75 deg Vee, U or J groove—single or double welded	0.051 and over	optional
		dc straight polarity	helium					

[a] Data applicable for electrodes and consumable method except dc is used rather than ac.

[b] When required, preheating the aluminum alloys prior to welding is done for two reasons: to reduce the size and distribution of gas porosity in the weld deposit or to speed up the welding rate or both. The preheating temperature varies from 300 to 800 F, depending on the thickness of the parts, the design and length of the joint and is a function of the job being welded. Once the proper preheating temperature has been established means to control variation of temperature from piece to piece of plus or minus 25 F will usually be adequate to insure consistent welds. Preheating to obtain certain metallurgical structures is frequently done when welding the ferrous materials. No comparable metallurgical changes occur in the aluminum alloys and no preheating technique is required for this purpose.

Flux is seldom used with inert-gas metal-arc welding and cleanliness of filler metal is more important. Contamination of the rod by dirt or oxidation from exposure to the atmosphere will usually show up in the form of small black particles on the surface of the weld.

These particles adhere quite tightly and require some mechanical finishing to remove. This condition apparently does not reduce the resistance to corrosion nor the mechanical properties of the joint but may be objectionable from an appearance standpoint. The condition can be eliminated by cleaning the rod before use with a steel wool rub or by cleaning in an etching operation.

Equipment for the welding processes listed in Table C is the same as that used for welding other metals.

PART IV.—WELDING PROCEDURE FOR ELECTRODES

The electrodes described in this specification are primarily for use with the inert-gas metal-arc welding process (consumable method). These electrodes are equally suitable for use in rod feeding devices in the nonconsumable method and are frequently so used.

The consumable electrode method permits the successful welding of aluminum alloys that are crack sensitive. The reasons for this might be described briefly as follows: Distortion is reduced to a minimum because the increase in temperature of the parts being welded is confined to a narrow zone. Because the aluminum alloys have high thermal conductivity, the reduction of distortion is more apparent than would be the case with ferrous materials. Cracking of welds in the aluminum alloys is reduced if the freezing rate is high. The consumable electrode method permits the welding of alloys with a wide melting range, which heretofore have been difficult to weld without cracking.

The high melting and freezing rate of the weld metal deposited with the consumable electrode method can result in entrapped gas in the welds. Control of this factor must be understood to get good results. Gas in the welds can be caused by contaminating influences, such as grease or hydrocarbon cleaning agents, on the electrode or on the base metal. Air leakage into the inert gas lines may also cause this condition. Improper adjustment of wire speed, welding current or other machine variables may have similar effect. The introduction of gas in the weld metal from any of these causes results in porosity, because the freezing rate is high and the gas does not have time to escape from the molten metal before the weld freezes.

Welds can be made in all positions with the consumable electrode method. Edge preparation similar to that used for the nonconsumable method is satisfactory. Either argon or helium shielding is used or mixtures of these gases may be used. Semi-automatic welding, in which the welding gun is moved by a welding operator, is difficult to control on metal thicknesses below $\frac{1}{8}$ in. No upper limit on metal thickness has been established. Welds in plate up to 3 in. in thickness have been made. Automatic consumable electrode welding is suitable for material less than $\frac{1}{4}$ in. in thickness. No minimum limit exists and thicknesses down to 0.051 in. have been welded at high welding rates.

Inert gas consumable electrode welding is done with direct current. Almost all d-c motor-generator sets and d-c rectifier welding machines used for shielded metal-arc welding with covered electrodes are suitable sources of power. A wire feeding mechanism, in which the electrode speed can be adjusted between 100 and 350 in. per min is needed. Stabilization of the arc with high frequency current is not required.

SPECIFICATION FOR NICKEL AND NICKEL-BASE ALLOY COVERED WELDING ELECTRODES

SB-295

(IDENTICAL WITH ASTM SPECIFICATION B 295-54T EXCEPT THAT ELECTRODES E3N14 AND E3N19 HAVE BEEN DELETED)

Scope

1. These specifications cover nickel and nickel-base alloy electrodes for shielded metal-arc welding nickel and nickel-base alloys individually to themselves and also for welding these materials to steel and for welding the clad side of nickel-base alloy clad steels.

PART I.—CLASSIFICATION AND ACCEPTANCE

Classification

2. The electrodes are classified on the basis of chemical composition, usability, and intended end use. One electrode may be classified in both an E3N1X and an E4N1X classification if it will meet the requirements of these specifications.

Manufacture

3. The electrodes may be made by any method which will yield a product conforming to the requirements of these specifications.

Chemical Composition

4. The weld metal deposited by an electrode in accordance with the procedure described in Section 18 shall be capable of meeting the chemical composition requirements as prescribed in Table I.

Mechanical Tests

5. (*a*) When and as prescribed by the electrode manufacturer, mechanical tests as follows shall be performed at the place of manufacture of the electrodes, for the purpose of classification.

(*1*) A transverse tension test to determine the tensile strength of the welded joint.

(*2*) A longitudinal guided-bend test to demonstrate the usability of an electrode as to the soundness of the weld metal and proper weld contour.

(*3*) A fillet weld test to determine usability.

(*b*) At the option and expense of the purchaser any or all of the foregoing tests may be used as a basis for acceptance of electrodes; however, the guided-bend test is usually sufficient.

Methods of Test

6. The prescribed tests, when conducted, shall be as specified in Sections 17 to 21, inclusive, and in Table IV.

Test Requirements

7. In order to be classified under these specifications, an electrode shall be capable of yielding the following results.

(*a*) *Short Gage Transverse Tension Test.*—A weld made with any E3N1- electrode, deposited in accordance with the procedure described in Section 19, shall be capable of meeting the minimum tensile strength requirements shown in Table II.

(*b*) *Longitudinal Guided-Bend Test.*—A weld made with any E3N1- or E4N1- electrode, deposited in accordance with the procedure described in Section 20, when tested as described therein, shall show no crack or open defect exceeding $\frac{1}{8}$ in. in any direction. Cracks occurring on corners of a specimen during testing shall not be considered cause for rejection.

(*c*) *Fillet Weld Test.*—A fillet weld made with any E3N1- electrode deposited in accordance with the procedure described in Section 21, when tested as described therein, and visually inspected, shall meet the following requirements.

(*1*) When examined visually, the weld shall be free of cracks and reasonably free of undercut, overlap, trapped slag, and porosity.

(*2*) The cross-section of the weld shall show penetration to or beyond the plate edges; the dimensions of the fillet shall conform to the dimensions shown in Fig. 6.

(*3*) After bending through 90 deg as indicated in Fig. 6, the broken or bent weld shall also demonstrate freedom from the above defects.

Retests

8. If any specimen fails to meet the test requirements, an additional specimen shall be prepared and shall conform to the requirements of that test.

Insulation

9. The coverings shall have sufficient electrical resistance to effectively insulate against a potential difference of 100 v, 60 cycle ac.

Core Wires and Coverings

10. (*a*) The diameter of the core wire shall not vary more than plus or minus 0.003 in. from the nominal diameter specified. The length of core wire shall not vary more than $\frac{1}{2}$ in. from the nominal length specified (see Section 12).

(*b*) The covering shall be concentric with the core wire to the extent that the maximum core-plus-one-covering dimension shall not exceed the minimum core-plus-one-covering dimension by more than 5 per cent of the minimum core-

TABLE I.—CHEMICAL COMPOSITION REQUIREMENTS OF DEPOSITED WELD METAL.

NOTE 1.—Analysis shall be made for the elements for which specific values are shown in this table. If, however, the presence of other elements is indicated in the course of routine analysis, further analysis shall be made to determine that the total of these other elements is not present in excess of the limits specified for "other elements" in the last item in the table.

NOTE 2.—Single values shown are maximum percentages, except where otherwise specified.

Element	Ni-Cu E3N10	Ni E3N11	Ni-Cr-Fe E3N12	Ni-Mo E3N1B E4N1B	Ni-Mo-Cr E3N1C E4N1C	Ni-Cu E4N10	Ni E4N11	Ni-Cr E4N12
Carbon	0.40	0.75	0.15	0.12	0.12	0.15	0.10	0.15
Manganese	4.00	0.75	1.50	1.00	1.00	2.50	0.75	1.50
Iron	2.50	0.75	11.00	4.00 to 7.00	4.00 to 7.00	2.50	0.75	4.00
Phosphorus	...	...	...	0.040	0.040	...	...	...
Sulfur	0.025	0.02	0.015	0.030	0.030	0.025	0.02	0.015
Silicon	1.00	1.25	0.75	1.00	1.00	1.25	1.25	0.75
Copper	remainder	0.25	0.50	...	...	remainder	0.25	0.50
Nickel	62.00 to 70.00[a]	92.00 min[a]	68.00 min[a]	remainder	remainder	62.00 to 70.00[a]	92.00 min[a]	70.00 min[a]
Cobalt	...	...	...	2.50	2.50	...	...	...
Aluminum	1.50	1.00	...	...	...	0.75	1.00	...
Titanium	1.00	0.50 to 4.00	...	...	...	1.50	1.00 to 4.00	...
Chromium	...	...	13.00 to 17.00	1.00	14.50 to 16.50	...	...	17.50 min
Columbium plus tantalum	...	...	1.5 to 4.00	...	...	3.00	...	1.5 to 4.00
Molybdenum	...	...	...	26.00 to 30.00	15.00 to 18.00	...	...	...
Vanadium	...	...	...	0.60	0.35	...	...	...
Tungsten	...	...	...	...	3.00 to 4.50	...	...	...
Other elements (total)	0.50	0.50	0.50	0.50	0.50	0.50	0.50	0.50

[a] Includes incidental cobalt.

TABLE II.—MINIMUM REQUIREMENTS OF SHORT GAGE TENSION TEST.

Electrode	Base Metal	Tensile Strength, min, psi	Condition
E3N10	Ni-Cu	70 000	as welded
E3N11	Ni	55 000	as welded
E3N12	Ni-Cr-Fe	80 000	as welded
E3N1B	Ni-Mo, plate under 3/16 in.	115 000	as welded
	Ni-Mo, plate 3/16 to 3/4 in., incl.	100 000	
E3N1C	Ni-Mo-Cr, plate over 3/4 to 1 1/2 in., incl.	90 000	as welded

TABLE III.—STANDARD SIZES AND LENGTHS.

Standard Electrode Size, in.	Standard Length, in.[a]	Grip
5/64, 3/32	9	end
	14	center
1/8, 5/32, 3/16, 1/4	10 or 14	end

[a] Lengths may vary ±1 in. from the standards.

plus-one-covering dimension. The concentricity may be measured by any suitable means.

(*c*) Core wires and coverings shall be free of defects which would interfere with the uniform performance of the electrodes.

Exposed Core

11. (*a*) End grip electrodes shall be bare or free from covering for a distance of about 3/4 in. but not more than 1 1/4 in. for making contact with the holder. Center grip electrodes shall be bare for approximately 1 1/2 in. but not more than 2 in.

(*b*) The arc end of the electrodes shall be sufficiently bare to permit easy striking of the arc. The length of the bare portion of the arc end (measured from the end to the point where full cross-section of the covering is obtained) shall not exceed 1/8 in. or the diameter of the core wire, whichever is the lesser. Electrodes with chipped coverings near the arc end baring the core wire slightly more than the prescribed distance may be accepted provided no chip uncovers more than 50 per cent of the circumference of the core.

Standard Sizes and Lengths

12. Standard sizes and lengths of electrodes shall be as shown in Table III. In all cases, standard size refers to the diameter of the core wire.

Packaging

13. The standard net weight shall be 5- or 10-lb unit packages placed in an outer container which will insure against injury during shipment and injury in storage when stored in a protected warehouse or its equivalent.

Marking

14. Each unit package and container shall be legibly marked with the following information.

(1) Classification number,
(2) Manufacturers' name and trade designation, and
(3) Standard size and net weight.

TABLE IV.—SUMMARY OF TEST REQUIREMENTS.

Electrode	Sizes	Chemical Analysis		Transverse Tension Test		Guided-Bend Test		Fillet Weld Test	
		Position	Base Plate	Position	Base Plate	Position	Base Plate	Position	Base Plate
E3N10	5/64, 3/32	flat	Ni-Cu	not required	...	not required	...	not required	...
	1/8, 5/32	flat	Ni-Cu	all	Ni-Cu	all	Ni-Cu	all	Ni-Cu
	3/16	flat	Ni-Cu	flat	Ni-Cu	flat	Ni-Cu	HF*	Ni-Cu
E3N11	5/64, 3/32	flat	Ni	not required	...	not required	...	not required	...
	1/8	flat	Ni	all	Ni	all	Ni	all	Ni
	5/32, 3/16	flat	Ni	flat	Ni	flat	Ni	HF*	Ni
E3N12	5/64, 3/32	flat	Ni-Cr-Fe	not required	...	not required	...	not required	...
	1/8, 5/32, 3/16	flat	Ni-Cr-Fe	flat	Ni-Cr-Fe	flat	Ni-Cr-Fe	HF*	Ni-Cr-Fe
E3N1B	5/64, 3/32	flat	Ni-Mo	not required	...	not required	...	not required	...
	1/8, 5/32, 3/16	flat	Ni-Mo	flat	Ni-Mo	flat	Ni-Mo	HF*	Ni-Mo
E3N1C	5/64, 3/32	flat	Ni-Mo-Cr	not required	...	not required	...	not required	...
	1/8, 5/32, 3/16	flat	Ni-Mo-Cr	flat	Ni-Mo-Cr	flat	Ni-Mo-Cr	HF*	Ni-Mo-Cr
E4N10	all sizes	flat	Ni-Cu	not required		flat	steel	not required	
E4N11	all sizes	flat	Ni	not required		flat	steel	not required	
E4N12	all sizes	flat	Ni-Cr-Fe	not required		flat	steel	not required	
E4N1B	all sizes	flat	Ni-Mo	not required		flat	steel	not required	
E4N1C	all sizes	flat	Ni-Mo-Cr	not required		flat	steel	not required	

*HF = horizontal fillet.

Electrode Identification

15. All electrodes shall be identified in accordance with the "Standard for Color Markings for Electrode Identification" of the National Electrical Manufacturers Association.

Guarantee

16. The manufacturer shall guarantee that the electrodes in all sizes and classifications conform to these specifications. The manufacturer's responsibility shall be limited to replacement of any electrodes that do not conform to the requirements of these specifications.

PART II.—DETAILS OF TESTS

Materials for Test Plates

17. The base metal to be used for test plates as prescribed in Table IV and in subsequent details of test procedures shall be plate, sheet, or strip conforming to the following specifications:

Base Metal	Specification
Ni-Cu (Monel)[a]	ASTM B 127
Ni (Nickel)[a]	ASTM B 162
Ni-Cr-Fe (Inconel)[a]	ASTM B 168
Ni-Mo (Hastelloy B)[a]	[b]
Ni-Mo-Cr (Hastelloy C)[a]	[b]
Steel	ASTM A 285

[a] Annealed or solution-treated condition except for weld pad for chemical analysis, in which case any condition may be used.

[b] Specifications for Hastelloy B and C are under preparation by the American Society for Testing Materials.

Chemical Analysis

18. (*a*) A weld pad shall be deposited in the flat position on material of the composition shown in Table IV and Section 17, using procedures recommended by the manufacturer as to factors not prescribed herein. The size and thickness of the base material may be any convenient dimensions for the purpose. The pad shall be built up of multiple passes and layers. Slag shall be removed following each pass. The plate shall be not colder than 60 F prior to starting and shall be allowed to air cool below 212 F after each pass and subsequent to the next pass. The minimum pad height shall be 1/2 in. Suggested pad dimensions for various electrode sizes are indicated below:

Electrode Size, in.	Pad Size, min, in.
5/64, 3/32	1 by 1 by 1/2
1/8, 5/32, 3/16	1 1/2 by 1 1/2 by 1/2
1/4	2 by 2 by 1/2

(*b*) The top surface of the pad shall be machined smooth and discarded. One ounce samples of clean millings, drillings or chips free of slag shall be removed from the pad no closer than 1/4 in. from the base metal.

(*c*) Chemical analysis shall be made of the sample millings, drillings or chips obtained, and shall be capable of meeting the requirements shown in Section 4 and Table I. Where applicable, the following standards for chemical analysis of the American Society for Testing Materials shall be used in case of disagreement:

TABLE I.—CHEMICAL COMPOSITION REQUIREMENTS OF DEPOSITED WELD METAL.

NOTE 1.—Analysis shall be made for the elements for which specific values are shown in this table. If, however, the presence of other elements is indicated in the course of routine analysis, further analysis shall be made to determine that the total of these other elements is not present in excess of the limits specified for "other elements" in the last item in the table.

NOTE 2.—Single values shown are maximum percentages, except where otherwise specified.

Element	Ni-Cu E3N10	Ni E3N11	Ni-Cr-Fe E3N12	Ni-Mo E3N1B E4NiB	Ni-Mo-Cr E3N1C E4NiC	Ni-Cu E4N10	Ni E4N11	Ni-Cr E4N12
Carbon	0.40	0.75	0.15	0.12	0.12	0.15	0.10	0.15
Manganese	4.00	0.75	1.50	1.00	1.00	2.50	0.75	1.50
Iron	2.50	0.75	11.00	4.00 to 7.00	4.00 to 7.00	2.50	0.75	4.00
Phosphorus	...	...	...	0.040	0.040	...	...	...
Sulfur	0.025	0.02	0.015	0.030	0.030	0.025	0.02	0.015
Silicon	1.00	1.25	0.75	1.00	1.00	1.25	1.25	0.75
Copper	remainder	0.25	0.50	...	...	remainder	0.25	0.50
Nickel	62.00 to 70.00[a]	92.00 min[a]	68.00 min[a]	remainder	remainder	62.00 to 70.00[a]	92.00 min[a]	70.00 min[a]
Cobalt	...	...	...	2.50	2.50	...	...	...
Aluminum	1.50	1.00	...	...	...	0.75	1.00	...
Titanium	1.00	0.50 to 4.00	...	...	...	1.50	1.00 to 4.00	...
Chromium	...	...	13.00 to 17.00	1.00	14.50 to 16.50	...	...	17.50 min
Columbium plus tantalum	...	...	1.5 to 4.00	...	...	3.00	...	1.5 to 4.00
Molybdenum	...	...	...	26.00 to 30.00	15.00 to 18.00	...	...	...
Vanadium	...	...	...	0.60	0.35	...	...	...
Tungsten	...	...	...	...	3.00 to 4.50	...	...	...
Other elements (total)	0.50	0.50	0.50	0.50	0.50	0.50	0.50	0.50

[a] Includes incidental cobalt.

TABLE II.—MINIMUM REQUIREMENTS OF SHORT GAGE TENSION TEST.

Electrode	Base Metal	Tensile Strength, min, psi	Condition
E3N10	Ni-Cu	70 000	as welded
E3N11	Ni	55 000	as welded
E3N12	Ni-Cr-Fe	80 000	as welded
E3N1B	Ni-Mo and Ni-Mo-Cr, plate under 3/16 in.	115 000	as welded
	Ni-Mo and Ni-Mo-Cr, plate 3/16 to 3/4 in., incl.	100 000	
E3N1C	Ni-Mo and Ni-Mo-Cr, plate over 3/4 to 1 1/2 in., incl.	90 000	as welded

plus-one-covering dimension. The concentricity may be measured by any suitable means.

(*c*) Core wires and coverings shall be free of defects which would interfere with the uniform performance of the electrodes.

Exposed Core

11. (*a*) End grip electrodes shall be bare or free from covering for a distance of about 3/4 in. but not more than 1 1/4 in. for making contact with the holder. Center grip electrodes shall be bare for approximately 1 1/2 in. but not more than 2 in.

(*b*) The arc end of the electrodes shall be sufficiently bare to permit easy striking of the arc. The length of the bare portion of the arc end (measured from the end to the point where full cross-section of the covering is obtained) shall not exceed 1/8 in. or the diameter of the core wire, whichever is the lesser. Electrodes with chipped coverings near the arc end baring the core wire slightly more than the prescribed distance may be accepted provided no chip uncovers more than 50 per cent of the circumference of the core.

Standard Sizes and Lengths

12. Standard sizes and lengths of electrodes shall be as shown in Table III.

TABLE III.—STANDARD SIZES AND LENGTHS.

Standard Electrode Size, in.	Standard Length, in.[a]	Grip
5/64, 3/32	9	end
	14	center
1/8, 5/32, 3/16, 1/4	10 or 14	end

[a] Lengths may vary ±1 in. from the standards.

In all cases, standard size refers to the diameter of the core wire.

Packaging

13. The standard net weight shall be 5- or 10-lb unit packages placed in an outer container which will insure against injury during shipment and injury in storage when stored in a protected warehouse or its equivalent.

Marking

14. Each unit package and container shall be legibly marked with the following information.

(1) Classification number,
(2) Manufacturers' name and trade designation, and
(3) Standard size and net weight.

TABLE IV.—SUMMARY OF TEST REQUIREMENTS.

Electrode	Sizes	Chemical Analysis		Transverse Tension Test		Guided-Bend Test		Fillet Weld Test	
		Position	Base Plate	Position	Base Plate	Position	Base Plate	Position	Base Plate
E3N10	5/64, 3/32	flat	Ni-Cu	not required	...	not required	...	not required	...
	1/8, 5/32	flat	Ni-Cu	all	Ni-Cu	all	Ni-Cu	all	Ni-Cu
	3/16	flat	Ni-Cu	flat	Ni-Cu	flat	Ni-Cu	HF*	Ni-Cu
E3N11	5/64, 3/32	flat	Ni	not required	...	not required	...	not required	...
	1/8	flat	Ni	all	Ni	all	Ni	all	Ni
	5/32, 3/16	flat	Ni	flat	Ni	flat	Ni	HF*	Ni
E3N12	5/64, 3/32	flat	Ni-Cr-Fe	not required	...	not required	...	not required	...
	1/8, 5/32, 3/16	flat	Ni-Cr-Fe	flat	Ni-Cr-Fe	flat	Ni-Cr-Fe	HF*	Ni-Cr-Fe
E3N1B	5/64, 3/32	flat	Ni-Mo	not required	...	not required	...	not required	...
	1/8, 5/32, 3/16	flat	Ni-Mo	flat	Ni-Mo	flat	Ni-Mo	HF*	Ni-Mo
E3N1C	5/64, 3/32	flat	Ni-Mo-Cr	not required	...	not required	...	not required	...
	1/8, 5/32, 3/16	flat	Ni-Mo-Cr	flat	Ni-Mo-Cr	flat	Ni-Mo-Cr	HF*	Ni-Mo-Cr
E4N10	all sizes	flat	Ni-Cu	not required		flat	steel	not required	
E4N11	all sizes	flat	Ni	not required		flat	steel	not required	
E4N12	all sizes	flat	Ni-Cr-Fe	not required		flat	steel	not required	
E4N1B	all sizes	flat	Ni-Mo	not required		flat	steel	not required	
E4N1C	all sizes	flat	Ni-Mo-Cr	not required		flat	steel	not required	

* HF = horizontal fillet.

Electrode Identification

15. All electrodes shall be identified in accordance with the "Standard for Color Markings for Electrode Identification" of the National Electrical Manufacturers Association.

Guarantee

16. The manufacturer shall guarantee that the electrodes in all sizes and classifications conform to these specifications. The manufacturer's responsibility shall be limited to replacement of any electrodes that do not conform to the requirements of these specifications.

PART II.—DETAILS OF TESTS

Materials for Test Plates

17. The base metal to be used for test plates as prescribed in Table IV and in subsequent details of test procedures shall be plate, sheet, or strip conforming to the following specifications:

Base Metal	Specification
Ni-Cu (Monel)[a]	ASTM B 127
Ni (Nickel)[a]	ASTM B 162
Ni-Cr-Fe (Inconel)[a]	ASTM B 168
Ni-Mo (Hastelloy B)[a]	[b]
Ni-Mo-Cr (Hastelloy C)[a]	[b]
Steel	ASTM A 285

[a] Annealed or solution-treated condition except for weld pad for chemical analysis, in which case any condition may be used.

[b] Specifications for Hastelloy B and C are under preparation by the American Society for Testing Materials.

Chemical Analysis

18. (*a*) A weld pad shall be deposited in the flat position on material of the composition shown in Table IV and Section 17, using procedures recommended by the manufacturer as to factors not prescribed herein. The size and thickness of the base material may be any convenient dimensions for the purpose. The pad shall be built up of multiple passes and layers. Slag shall be removed following each pass. The plate shall be not colder than 60 F prior to starting and shall be allowed to air cool below 212 F after each pass and subsequent to the next pass. The minimum pad height shall be 1/2 in. Suggested pad dimensions for various electrode sizes are indicated below:

Electrode Size, in.	Pad Size, min, in.
5/64, 3/32	1 by 1 by 1/2
1/8, 5/32, 3/16	1 1/2 by 1 1/2 by 1/2
1/4	2 by 2 by 1/2

(*b*) The top surface of the pad shall be machined smooth and discarded. One ounce samples of clean millings, drillings or chips free of slag shall be removed from the pad no closer than 1/4 in. from the base metal.

(*c*) Chemical analysis shall be made of the sample millings, drillings or chips obtained, and shall be capable of meeting the requirements shown in Section 4 and Table I. Where applicable, the following standards for chemical analysis of the American Society for Testing Materials shall be used in case of disagreement:

E76, Tentative Methods for Chemical analysis of Nickel-Copper Alloys,
E39, Standard Methods for Chemical Analysis of Nickel, and
E38, Standard Methods for Chemical Analysis of Nickel-Chromium and Nickel-Chromium-Iron Alloys.

Short Gage Transverse Tension Test (For E3N1- Electrodes Only)

19. (*a*) An E3N1- electrode shall be used in accordance with the requirements of Fig. 1 using base plate material as prescribed in Section 17 and Table IV. The position of welding shall be in accordance with the requirements of Table IV. Welding shall be done under the electrical conditions and with the technique recommended by the manufacturer as to factors not prescribed herein. All plates shall be restrained to prevent warpage of more than 5 deg while welding except those used for testing E3N1B and E3N1C electrodes. All slag shall be removed after each pass and the assembly allowed to air cool below 212 F prior to subsequent passes. Upon completion of the welding of the face side, the root side shall be chipped or ground to sound metal and a seal bead applied. Specimens for the guided-bend test and the transverse tension test may be cut from the same test plate, if desired.

(*b*) After welding, the specimen shall be machined as indicated in Fig. 2 and tested in tension. The maximum load recorded on the tension test shall be divided by the product of the least thickness and least width of the specimen (measured before tension testing) to obtain tensile values.

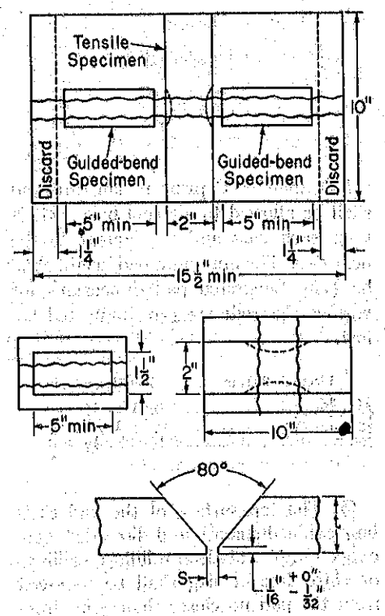

Electrode Diameter, in.	t, min, in.	S, in.*
1/8	1/8	3/64
3/32	3/16	1/16
3/16	1/4	1/16

* Before tackwelding.

FIG. 1.—Plate Preparation and Specimen Layout for Tension and Guided-Bend Tests.

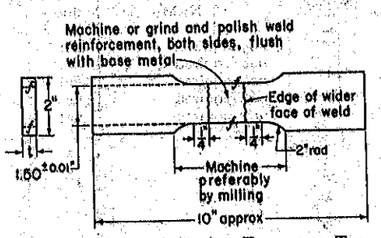

FIG. 2.—Reduced Section Transverse Tension Test Specimen.

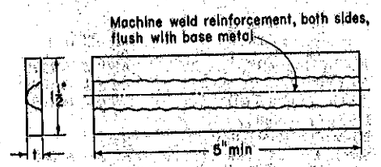

FIG. 3.—Guided-Bend Test Specimen for E3N1-Electrodes.

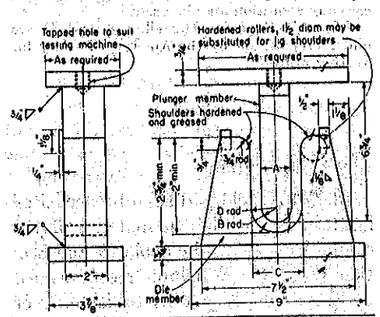

Thickness of Specimen	A, in.	B, in.	C, in.	D, in.
t	$4t$	$2t$	$6t + 1/8$	$3t + 1/16$

FIG. 4.—Guided-Bend Test Jig.

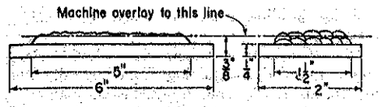

FIG. 5.—Guided-Bend Test Specimen for E4N1-Electrodes.

(*b*) (*For E4N1- Electrodes Only*).—An E4N1- electrode shall be used in accordance with the manufacturer's recommendations for depositing an overlay as shown in Fig. 5 on a ¾ in. steel plate in the flat position. The steel plates shall be of the composition specified in Section 17. All slag shall be removed after each pass and the plate allowed to air cool below 212 F before subsequent passes. After welding, the top of the overlay shall be machined or ground flat to within ⅛ in. of the plate (total thickness of overlay and plate ⅜ in.). The specimen shall be bent with the overlay directed toward the gap in a manner described in Paragraph (*a*) for the E3N1- electrodes.

Fillet Weld Test (For E3N1- Electrodes Only)

21. A fillet-welded Tee joint as shown in Fig. 6 shall be prepared using the electrical conditions and technique recommended by the manufacturer as to factors not prescribed herein. The base material shall be as specified in Section 17 and Table IV. The position of welding shall be in accordance with Table IV. The standing member shall have one edge machined throughout its length so that when it is set upon the base plate, there will be intimate contact for the entire length of the joint. Two cross-sections shall be cut approximately 1 in. from the ends of the weld. The face of one of the 1-in. sections shall be polished and etched with a suitable etchant. The balance of the specimen shall be bent or fractured as indicated in Fig. 6.

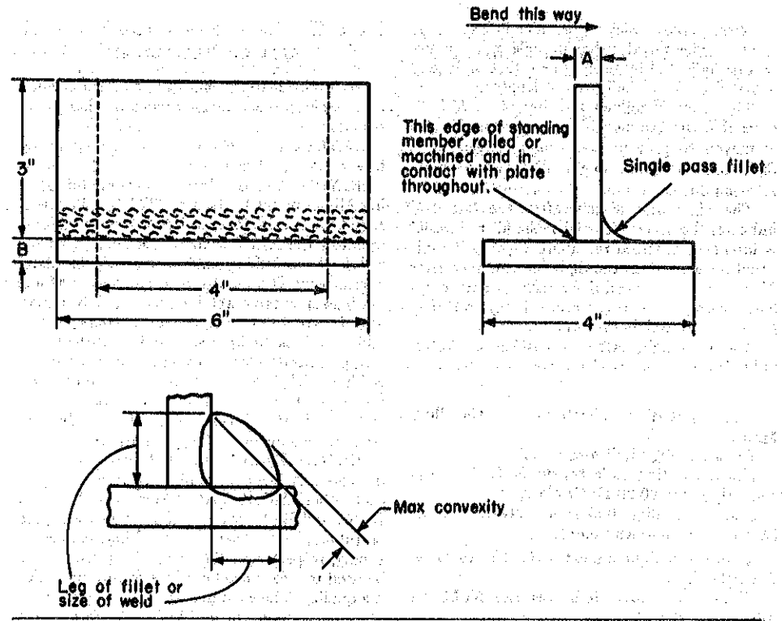

Electrode Diameter, in.	Plate Thickness, in.		Fillet Weld Size, min, in.	Leg Length, in.		Convexity, max, in.
	Vertical, A	Horizontal, B		min	max	
1/8	3/16	3/16	3/16	3/16	9/32	1/16
3/32	3/8	3/8	3/16	3/16	9/32	1/16
3/16	3/8	3/8	1/4	1/4	11/32	1/16

FIG. 6.—Fillet Weld Test for E3N1-Electrode.

APPENDIX

GUIDE TO THE AWS-ASTM CLASSIFICATION OF NICKEL AND NICKEL-BASE ALLOY COVERED WELDING ELECTRODES

PART I.—INTRODUCTION

In order that these specifications may be used effectively as an instrument for control and standardization, the attention of both manufacturers and purchasers of welding electrodes is directed to the following sections. None of the following discussion is to be considered a part of the specifications; its purpose is to correlate the method of classification of an electrode with its intended application.

The specifications have been developed primarily to classify nickel and nickel-base welding electrodes. The tests covered by these specifications are: (*1*) the chemical analysis of weld-metal; (*2*) the transverse tension test; (*3*) the guided-bend test; and (*4*) the fillet weld test.

The mechanics of the numbering system are similar to those used in the Military Specification (Electrode, Welding (High Temperature Alloys) MIL-E-17496 (Ships)) and will be further extended to include the nickel and nickel-base alloy bare welding filler materials.

The letter *E* precedes the designation as with all AWS-ASTM specifications for arc-welding electrodes. In the Military Specification, the *E* is replaced with MIL; otherwise, the mechanics as follows are identical.

The first digit indicates the intended use of the electrode. The number *3* as a first digit indicates an electrode primarily intended for joining nickel or a nickel-base alloy to itself. A first digit *4* indicates it is an electrode primarily intended for welding a nickel or nickel-base alloy where steel will be diluted into the weld metal as in joining a nickel or nickel-base alloy to steel, overlaying a nickel or nickel-base alloy on steel, or welding the clad side of nickel or a nickel-base alloy clad steel.

NOTE.—Bare nickel or nickel-base alloy welding filler metal either in coils or on spools will be indicated by using *1* as a first digit, and a first digit *2* will indicate cut lengths.

The letter *N* follows the first digit. *N* indicates that this is a nickel-base material. *N* is also employed to prevent confusion between three digit numbers which might otherwise resemble AISI numbers.

The digit immediately after the letter *N* indicates the process for which the filler material is intended. Shielded metal-arc welding is indicated by using *1* as the digit immediately after *N*. The digits *4*, *5*, and *6* are used for oxy-acetylene welding, submerged arc welding and inert gas metal-arc welding respectively.

The last digit, either a number or letter, indicates the analysis of the core wire.

0 as a last digit indicates the Ni-Cu alloy, Monel,

1 as a last digit indicates nickel,

2 as a last digit indicates the Ni-Cr-Fe alloy, Inconel, or the 80-20 Ni-Cr alloy,

3 as a last digit indicates a Ni-Cu-Si alloy (available as bare wire only),

B as a last digit indicates the Ni-Mo alloy Hastelloy B, and

C as a last digit indicates the Ni-Mo-Cr alloy, Hastelloy C.

The chemical analysis serves to identify and control the electrode through analysis of weld deposit.

The short gage tension test, used only for E3N1-electrodes, indicates the strength of the welded joint and to some extent the joint efficiency.

The guided-bend test is used to demonstrate the soundness of a weld and its ability to withstand a given amount of deformation. For the E3N1-electrodes, this test also demonstrates usability in a groove.

The guided-bend test (overlay) for E4N1-electrodes is used to demonstrate the soundness of a weld and its ability to withstand a given amount of deformation when steel is diluted into the deposited weld metal. These electrodes may be used to join a nickel-base alloy to steel or to weld the clad side of a nickel-base alloy and may also be used as an overlay electrode. Since it is impractical to establish testing procedures to cover all the complex combinations of use for such applications, any tests, other than those required herein, should be as agreed upon between the manufacturer and the purchaser.

The fillet weld test is intended to demonstrate the soundness of a weld and the usability of the electrode for making fillet welds.

It is recognized that for certain applications supplementary tests may be required. In such cases, additional tests to determine specific properties such as corrosion resistance, scaling resistance, or strength at elevated or sub-zero temperatures may be required as agreed upon between the electrode manufacturer and the purchaser, or the welding fabricator and the purchaser of the fabricated part.

PART II.—DESCRIPTION AND INTENDED USE OF ELECTRODES

Usability characteristics are omitted because of the highly specialized nature of these electrodes.

E3N1-Series.—Electrodes for joining nickel-base metals to themselves.

E3N10.—This is a Monel electrode for welding Monel metal to itself. ASTM Specifications B 163, B 164, B 165, and B 127 cover Monel metal in the forms of condenser tubing, bar or rods, pipe or tubing, and sheet, strip or plate, respectively. It may also be used to weld Monel castings of suitable welding quality. E3N10 may also be used for welding other copper-nickel alloys such as 70-30, 80-20, and 90-10 to themselves. E3N10 electrodes have been used for welding "K" Monel, but the weld deposit does not respond to age hardening to the same extent as the "K" Monel base metal. The E3N14 electrode is recommended for this purpose.

E3N11.—This is a nickel electrode for welding nickel or low carbon nickel to themselves or each other. ASTM Specifications B 160, B 161, B 162, and B 163 cover nickel bar or rods, pipe or tubing, plate, sheet or strip, and condenser tubing, respectively. The E3N11 electrode may be used to weld nickel castings of suitable welding quality. The weld deposit will not graphitize at temperatures above 600 F; therefore, these electrodes may be used for welding low carbon nickel which, because of its low carbon content, has minimum susceptibility to graphitization at temperatures above 600 F. Many joints between nickel and steel and overlays of nickel on steel have been made with E3N11 electrodes and have been satisfactory in service; however, the E4N11 electrode is recommended because of the superior ductility of deposited weld metal under these conditions.

E3N12.—This is an Inconel electrode for welding Inconel to itself. ASTM Specifications B 163, B 166, B 167, and B 168 cover Inconel, condenser tubing, bar or rods, pipe or tubing, and plate, sheet or strip, respectively. The E3N12 electrode may be used to weld Inconel castings of suitable welding quality. This electrode may also be employed for welding Inconel "X" but the resulting weld will not respond to age hardening to the same extent as the base material. E3N12 electrodes have also found extensive use for a number of dissimilar metals combinations. In applications where considerable stress will be developed, as in welding heavy plate material or in welding stiff structures in lighter gage material, the chemistry of the weld deposit should provide for an adequate columbium and tantalum to silicon ratio to prevent hot cracking. For this purpose, a minimum ratio of 4 to 1 is generally desired. If it is known that the application will contain either of these conditions of stress, it is recommended that the electrode manufacturer be consulted.

E3N1B.—This is a Hastelloy alloy B electrode intended for joining Hastelloy alloy B material to itself, for welding Hastelloy alloy B plate or sheet to steel backing (as in cladding), and for welding Hastelloy alloy B to other metals.

E3N1C.—This is a Hastelloy alloy C electrode intended for joining Hastelloy alloy C material to itself, for welding Hastelloy alloy C plate or sheet to steel backing (as in cladding), and for welding Hastelloy alloy C to other metals.

E4N1-Series.—Electrodes for welding nickel and nickel-base alloys where the welds will be diluted by steel such as in joining a nickel-base alloy to steel, in overlaying a nickel-base alloy on steel, and in welding the clad side of nickel-base alloy clad steels. In such applications, it is important to obtain as little dilution of the weld with steel as possible by depositing a rather heavy bead and dissipating the digging energy of the arc against molten alloy metal rather than against steel.

E4N10.—This is a Monel electrode intended for welding Monel in the three instances above. The weld deposit, when properly made, will exhibit ductilities greater than 30 per cent. It may also be employed to weld Monel to itself in the flat position.

E4N11.—This is a nickel electrode intended for welding nickel in the three instances above. The weld deposit, when properly made, will exhibit ductilities greater than 30 per cent. It may also be employed in all positions for welding nickel to itself.

E4N12.—This is an electrode having an 80 Ni–20 Cr core wire. This electrode is recommended for use where dilution of the weld deposit by steel will lower the chromium content. If an E3N12 electrode were used in this instance, the chromium level might drop below a critical 12 per cent. If corrosion resistance in the weld is not a factor, the E3N12 electrode may be used. The E4N12 electrode is also used for the 80 Ni–20 Cr alloys. The columbium to silicon ratio of the weld deposit is important in this electrode as it is in the E3N12 electrode.

E4N1B.—See *E3N1B*.

E4N1C.—See *E3N1C*.

PART III.—SPECIAL TESTS OF ELECTRODES

Although welds from electrodes covered by these specifications are commonly used in corrosion or heat-resisting applications, it is not practical to require tests for corrosion or scale resistance on welds or weld metal specimens. Such special tests which are pertinent to the intended application may be conducted as agreed upon between the manufacturer and the purchaser, or between the welding fabricator and the purchaser of the fabricated part. This section is included for the guidance of those who desire to specify special tests.

Corrosion or Scaling Tests.—Tests of joint specimens have the advantage that the joint design and welding sequence can be made identical to that being used in fabrication. They have the disadvantage of being a test of the combined properties of the weld metal, the heat-affected zone of the base metal, and unaffected base metal. Furthermore, it is difficult to obtain reproducible data if a difference exists between

the corrosion or oxidation rates of the various metal structures (weld metal, heat-affected zone, and unaffected base metal). Test samples cannot be readily standardized if welding sequence and joint design are to be considered a variable. Joint specimens for corrosion tests should not be used for qualifying the electrode, but may be used for qualifying welding procedures using approved materials.

All-weld-metal specimens for testing corrosion or scale resistance are prepared by following the procedure outlined for the preparation of pads for chemical analysis (see Section 4). The pad size should be at least $\frac{3}{4}$ in. in height by $2\frac{1}{2}$ in. in width by $(1 + \frac{5}{8}\,n)$ in. in length, where n represents the number of specimens required from the pad. Specimens measuring $\frac{1}{4}$ in. by $\frac{1}{2}$ in. by 2 in. are machined from the top surface of the pad in such a way that the 2-in. dimension of the specimen is parallel to the $2\frac{1}{2}$-in. width dimension of the pad and the $\frac{1}{4}$-in. dimension is parallel to the length of the pad.

The heat treatments, surface finish, and marking of the specimens prior to testing should be in accordance with standard practices for tests of similar alloys in the wrought or cast forms. The testing procedure should correspond to the Recommended Practice for Conducting Plant Corrosion Tests (ASTM Designation: A 224).

Tests for Mechanical Properties.—Tests of joint specimens may be desired when the intended application involves the welding of dissimilar metals. Procedures for the mechanical testing of such joints should be in accordance with the "Standard Methods of Mechanical Testing of Welds" of the American Welding Society.

Tests of joint specimens may be influenced by the properties of the base metal and welding procedures and may not provide adequate tests of the weld metal. Such tests should be considered as tests for qualifying welding procedures using approved materials rather than for qualifying the electrodes.

Where fabrication codes require tests of welds in heat-treated conditions other than that specified in Table II, tests of heat-treated specimens may be desired.

Radiography.—If radiography is desired, it shall be as agreed upon between the manufacturer and the purchaser. In general, the procedures of the ASME Boiler and Pressure Vessel Code, Section VIII, latest edition, Par. UW-51, are preferred.

SPECIFICATION FOR NICKEL AND NICKEL-BASE ALLOY BARE WELDING FILLER METALS

SB-304

(IDENTICAL WITH ASTM SPECIFICATION B 304-56T EXCEPT THAT ELECTRODES RN43, ERN64, ERN69, ERN6N, AND ERN7W HAVE BEEN DELETED)

Scope

1. This specification covers bare filler metals (welding rods and electrodes) for the welding of nickel and high-nickel alloys containing more than 50 per cent nickel by the oxy-acetylene, atomic hydrogen, inert-gas metal-arc (non-consumable electrode), inert-gas metal-arc (consumable electrode), and submerged arc welding processes.

Classification

2. The filler metals are classified on the basis of their chemical composition as manufactured.

Manufacture

3. The filler metals may be made by any method that will yield a uniform product conforming to the requirements of this specification.

Chemical Composition

4. The filler metals shall conform to the chemical composition shown in Table I for the classification in which they are to be included.

Standard Sizes and Lengths

5. (*a*) The filler metals shall be available in straight lengths and coils and wound on rims or spools.

(*b*) Standard sizes shall be as shown in Table II.

(*c*) Standard straight lengths shall be 36 ± ¼ in.

Finish and Temper

6. (*a*) All filler metals shall have a smooth finish, free from slivers, depressions, scratches, and scale, or foreign matter that would adversely affect the welding properties, the operation of the welding equipment, or the properties of the deposited metal.

(*b*) Temper shall be as agreed upon between the manufacturer and the purchaser.

TABLE I.—CHEMICAL REQUIREMENTS.

NOTE 1.—Analysis shall be made for the elements for which specific values are shown in this table. If, however, the presence of other elements is indicated in the course of routine analysis, further analysis shall be made to determine that the total of these other elements is not present in excess of the limits specified for "Other Elements, Total" in the last column in the table.

NOTE 2.—Single values shown are maximum percentages, except where otherwise specified.

AWS-ASTM Classification	Alloy	Carbon, per cent	Manganese, per cent	Iron, per cent	Boron, per cent	Sulfur, per cent	Silicon, per cent	Copper, per cent	Nickel plus Cobalt,[a] per cent	Cobalt, per cent	Aluminum, per cent	Titanium, per cent	Chromium, per cent	Columbium plus Tantalum, per cent	Molybdenum, per cent	Vanadium, per cent	Tungsten, per cent	Other Elements, Total, per cent
RN40	Nickel-copper	0.30	2.00	2.50	...	0.02	0.50	remainder	63.0 to 70.0	...	...	...	...	...	...	...	...	0.50
ERN60	Nickel-copper	0.15	1.00	2.50	...	0.02	1.50	remainder	62.0 to 69.0	...	1.25	1.50 to 3.00	...	...	...	...	...	0.50
RN41	Nickel	0.15	0.35	0.40	...	0.01	1.00	0.25	97.0 min	...	...	0.50	...	...	...	...	...	0.50
ERN61	Nickel	0.15	1.00	1.00	...	0.01	0.75	0.25	93.0 min	...	1.50	2.00 to 3.50	...	...	...	...	...	0.50
RN42	Nickel-chromium-iron	0.10	1.00	6.00 to 10.0	...	0.015	0.50	0.50	72.0 min	...	...	...	14.0 to 17.0	...	...	...	...	1.00
ERN62	Nickel-chromium-iron	0.10	1.00	6.00 to 10.0	...	0.015	0.75	0.50	70.0 min	...	...	...	14.0 to 17.0	1.50 to 3.00	...	...	...	1.00
ERN7B	Nickel-molybdenum	0.08	1.00	4.00 to 7.00	0.04	0.03	1.00	...	remainder	2.50	...	...	1.00	...	26.0 to 30.0	0.20 to 0.60	...	0.50
ERN7C	Nickel-molybdenum-chromium	0.08	1.00	4.00 to 7.00	0.04	0.03	1.00	...	remainder	2.50	...	...	14.5 to 16.5	...	15.0 to 17.0	0.35	3.00 to 4.50	0.50

[a] Cobalt, if determined, 1.00 per cent max.

TABLE II.—STANDARD SIZES.

Filler Metal Form	Diameter, in.	Tolerance, in.[a]
Straight lengths (all series)	1/16, 3/32, 1/8, 5/32, 3/16, 1/4	+0.002 −0.003
Loose coils (ERN7 series only)	1/16, 3/32, 1/8, 5/32, 3/16	+0.002 −0.003
Layer wound coils (ERN7 series only)	5/32, 3/16, 1/4	±0.002
Layer wound rims (ERN7 series only)	1/16, 3/32, 1/8	±0.002
Spools (except RN4 series)	0.035, 0.045, 0.062	+0.001 −0.002

[a] Out-of-roundness shall not exceed one half the above total tolerance.

Coil, Rim, Spool, and Winding Requirements

7. (*a*) Coil dimensions shall be as specified in Table III.

(*b*) If rims are used, they shall have an inside diameter of 12 in., plus 0 and minus ½ in., and a width of 3 in., plus 3/16 and minus 0 in., unless otherwise specified. Rims shall be of such material and thickness as to provide adequate strength and rigidity to prevent damage or distortion in normal handling or use. Rims shall be sufficiently clean and dry to maintain the cleanliness of the filler metal.

(*c*) If spools are used, spool dimensions shall be as shown in Fig. 1, unless otherwise specified. Barrel diameter, *B*, shall be such as to permit proper feeding of the electrode. Spools shall be of such material and thickness as to provide adequate strength and rigidity to prevent damage or distortion in normal handling or use. Spools shall be sufficiently clean and dry to maintain the cleanliness of the filler metal and shall be so constructed as to insulate the filler metal from the spindle.

(*d*) The filler metal shall be wound so as to avoid producing kinks, waves, or sharp bends and so that it is free to unwind without restriction caused by overlapping or wedging. The outside end of coiled or spooled filler metal shall be so treated that it may be easily located.

(*e*) Each coil, rim, or spool shall be of one continuous length of filler metal made from a single heat of material.

TABLE III.—STANDARD SIZES OF COILS (APPROXIMATE).

Coils	Weight, lb	Inside Diameter, in.	Outside Diameter, in.
Loose	20 to 30	12 min	16 max
Loose	80 to 140	20 to 27	...
Layer Wound	80 to 140	22 to 27	...

Packaging

8. (*a*) All packages shall be strong enough to permit handling and storage under normal conditions.

(*b*) *Filler Metal in Straight Lengths.*—Standard size packages shall be 5, 10, and 25-lb net weight.

(*c*) *Filler Metal in Coils.*—Standard size coils shall be as shown in Table III. Coils shall be wrapped and tied securely.

(*d*) *Filler Metal Wound on Rims and on Spools.*—Standard size rims and spools shall be 25-lb net weight. Weight tolerance on rims and spools shall be ±20 per cent. Up to 20 per cent of any lot of rims or spools may contain 12½- to 20-lb net weight.

(*e*) Filler metal shall be suitably packaged to ensure against injury during shipping or storage under normal conditions.

Marking

9. (*a*) The outside of each package shall be legibly marked with the following information:

(*1*) Classification and specification number,

(*2*) Manufacturer's name and trade designation,

(*3*) Diameter and net weight, and

(*4*) Control or heat number.

(*b*) Within the outer wrapping, filler metal in coils shall be identified by tag or otherwise at both ends, showing the classification number in such a manner that the identification is not readily removable.

(*c*) Filler metal wound on rims shall be identified by the classification number placed directly on the rim in such a manner that it is not readily removable.

(*d*) Filler metal wound on spools

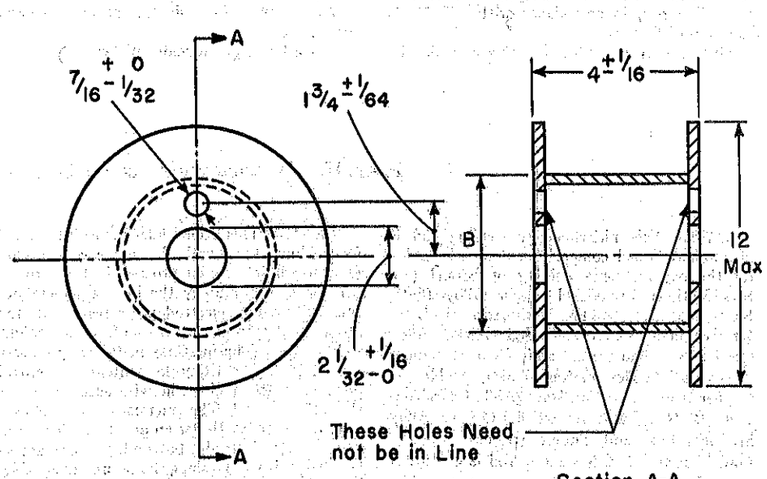

Note: All Dimensions in Inches

FIG. 1.—Standard Spool Dimensions.

shall be identified by the classification number placed on at least one flange of the spool in such a manner that it is not readily removable.

Guarantee

10. The manufacturer shall guarantee that the filler metal in all sizes and classifications conform to this specification. The manufacturer's responsibility shall be limited to replacement of any filler metal that does not conform to the requirements of this specification.

APPENDIX

GUIDE TO AWS-ASTM CLASSIFICATION OF NICKEL AND NICKEL-BASE ALLOY BARE WELDING FILLER METALS

PART I.—INTRODUCTION

This guide is appended to the specification as a source of information; *it is not mandatory and does not form a part of the specification.*

The specification itself is intended to provide both the manufacturer and the purchaser of nickel and nickel-base alloy filler metals with a means of production control and a basis of acceptance through mutually acceptable, sound, standard requirements.

This guide has been prepared as an aid to prospective users of the nickel and nickel-base alloy filler metals covered by the specification in determining the classification best suited for a particular application, with due consideration to the particular requirements for that application.

In the classification system employed herein, the prefix *R* indicates that the material is suitable for use as a welding rod only. The prefix *ER* indicates suitability either as an electrode or welding rod, in accordance with the AWS definition of these terms.

The letter *N* indicates that this is a nickel-base filler metal. The first digit after the letter *N* indicates the process or processes for which the filler metal is intended.

4 as the first digit after *N* indicates oxy-acetylene welding,

6 as the first digit after *N* indicates inert-gas metal-arc (consumable or nonconsumable electrode) welding, or atomic hydrogen welding, and

7 as a first digit after *N* indicates the processes listed in 6 plus submerged arc welding.

These filler metals are designed for use in the welding processes shown above in all positions suitable for those processes. They may not be expected to operate satisfactorily in processes for which they were not intended.

The last digit, either a number or a letter, indicates the nominal composition of the filler metal.

0 as a last digit indicates the nickel-copper alloy, Monel,

1 as a last digit indicates nickel,

2 as a last digit indicates the nickel-chromium-iron alloy, Inconel,

B as a last digit indicates the nickel-molybdenum alloy, Hastelloy B,

C as a last digit indicates the nickel-molybdenum-chromium alloy, Hastelloy C,

In this specification classification is on the basis of chemical composition of the filler metal as manufactured for the welding process for which it was intended. Mechanical tests have not been included because the developments in the use of these filler metals for the processes designated in Section 1 have not progressed far enough to permit standardization of mechanical tests and yet make them sufficiently searching for all applications. It can be stated, however, that joints made with these filler metals under properly controlled welding procedures and using the processes prescribed herein will have mechanical properties at least equal to the base metal of corresponding chemical composition unless otherwise indicated.

PART II.—CLASSIFICATION AS TO COMPOSITION

RN40.—This nickel-copper welding rod is of nominal Monel composition and is intended for the oxy-acetylene welding of Monel (see Specifications for Nickel-Copper Alloy Plate, Sheet, and Strip (ASTM Designation: B 127), for Seamless Nickel and High Nickel Alloy Condenser, Evaporator and Heat-Exchanger Tubes (ASTM Designation: B 163), for Nickel-Copper Alloy Rods and Bars (ASTM Designation: B 164), and for Nickel-Copper Alloy Seamless Pipe and Tubing (ASTM Designation: B 165)). If this welding rod is employed with the inert-gas metal-arc (nonconsumable electrode) welding process, gross porosity will probably result.

ERN60.—This Monel filler metal is intended for welding Monel with the inert-gas metal-arc (consumable electrode) process, in the form of wire on spools, and by the inert-gas metal-arc (nonconsumable electrode) process and the atomic hydrogen process in the form of straight welding rods. The inert-gas metal-arc processes require a higher titanium content to control porosity which might otherwise occur if one of the other Monel filler metals were employed with this process. Under an arc, this filler metal will flow satisfactorily, but under an oxy-acetylene flame, it will be sluggish and unmanageable. Therefore, ERN60 is not recommended for oxy-acetylene welding.

RN41.—This nickel welding rod is intended for the oxy-acetylene welding of nickel (see Specifications for Nickel Rods and Bars (ASTM Designation: B 160), for Nickel Seamless Pipe and Tubing (ASTM Designation: B 161), for Nickel Plate, Sheet, and Strip (ASTM Designation: B 162), and Specifications B 163). If this welding rod is used with the inert-gas metal-arc (nonconsumable electrode) process, gross porosity will probably result.

ERN61.—This nickel filler metal is intended for the welding of nickel by the inert-gas metal-arc (consumable electrode) process in the form of wire wound on spools, and for use with the inert-gas metal-arc (nonconsumable electrode) process and the atomic hydrogen process in the form of straight welding rods. The inert-gas metal-arc processes require a higher titanium content to control porosity. This material should not be used with the oxy-acetylene welding process since the weld metal will be sluggish.

RN42.—This Inconel welding rod is intended for the welding of Inconel (see Specifications B 163 (nickel-chromium-iron alloy), also Specifications for Nickel-Chromium-Iron Alloy Rods and Bars (ASTM Designation: B 166), for Nickel-Chromium-Iron Alloy Seamless Pipe and Tubing (ASTM Designation: B 167), and for Nickel-Chromium-Iron Alloy Plate, Sheet, and Strip (ASTM Designation: B 168)) with the oxy-acetylene welding process. This welding rod is not recommended for use with the inert-gas metal-arc processes on sheet in the order of ⅛-in. in thickness and heavier (see ERN62).

ERN62.—This Inconel filler metal is intended for the joining of Inconel by the inert-gas metal-arc (consumable electrode) process in the form of wire wound on spools, and for the inert-gas metal-arc (nonconsumable electrode) process and the atomic hydrogen process in the form of straight lengths. The additional columbium-plus-tantalum content, aimed at a minimum of four times the silicon content, is present to minimize hot-cracking tendencies in the weld where high stress is encountered, such as in the welding of heavy gage material. This filler metal may be used for oxy-acetylene welding if desired.

ERN7B.—This filler metal is intended for welding Hastelloy alloy B by any of the welding processes (except oxy-acetylene) mentioned in the specification. The oxy-acetylene process is not recommended because of its deleterious effect on the corrosion resistance of the alloy.

ERN7C.—This filler metal is intended for welding Hastelloy alloy C by any of the welding processes (except oxy-acetylene) mentioned in the specification. The oxy-acetylene process is not recommended because of its deleterious effect on the corrosion resistance of the alloy.

PART III.—USABILITY

Prior to any welding or heating operation, it is important that nickel and nickel-base materials be clean and free from foreign materials that might cause contamination. Oil, grease, paint, lubricants, marking pencil marks, threading compounds, and other such material frequently contain sulfur or lead which may cause embrittlement if present during welding or heating.

In oxy-acetylene welding, a slightly reducing flame is required with a feather of excess acetylene approximately ⅛ in. long. Generator acetylene frequently contains so much sulfur that it causes embrittlement; cylinder acetylene is preferred. A tip one size larger than for steel is usually desired, and the flame should be quiet, not harsh. During welding, the proper welding rod is melted into the weld puddle without agitation. Agitating the weld puddle with the torch or welding rod will burn out deoxidizers and cause porosity. No flux is needed with nickel or low-carbon nickel (0.02 per cent max carbon) welded with the RN41 welding rod. No flux is needed for welding Monel with the RN43 welding rod. The other alloys require special boron-free fluxes for satisfactory welding. The oxy-acetylene process is not recommended for welding Inconel "X", Inconel "W", or Hastelloy B, C, and W.

In the inert-gas metal-arc (nonconsumable electrode) welding process, d-c straight polarity is preferred. The pure grades of either argon or helium may be used as a shielding gas.

In welding with the inert-gas metal-arc (consumable electrode) welding process, d-c reverse polarity is usually employed. The shielding gas is usually argon, but mixtures of argon and helium can be used on special occasions. Normally a current and wire feed is selected such that metal transfer occurs in spray form for welding and in droplet form for overlay work. The droplet transfer provides less dilution of the overlay with the base metal.

Submerged arc welding may be used for the Hastelloy alloys but is not recommended for the other nickel alloys.

PART IV.—SPECIAL TESTS

Although welds from filler metal covered by this specification are commonly used in corrosion or heat-resisting applications, it is not practical to require tests for corrosion or scale-resistance on welds or weld metal specimens. Such special tests which are pertinent to the intended application may be conducted as agreed upon between the manufacturer and the purchaser. This section is included for the guidance of those who desire to specify special tests.

Corrosion or Scaling Tests.—Tests of joint specimens have the advantage that the joint design and welding sequence can be made identical to that being used in fabrication. They have the disadvantage of being a test of the combined properties of the weld metal, the heat-affected zone of the base metal, and the unaffected base metal. Furthermore, it is difficult to obtain reproducible data if a difference exists between the corrosion or oxidation rates of the various metal structures (weld metal, heat-affected zone, and unaffected base metal). Test samples cannot be readily standardized if welding sequence and joint design are to be considered variables. Welded specimens intended for corrosion tests should not be used for qualifying welding procedures using approved materials.

The heat treatments, surface finish, and marking of the specimens prior to testing should be in accordance with standard practices for tests of similar alloys in the wrought or cast forms. The testing procedure should correspond to the Recommended Practice for Conducting Plant Corrosion Tests (ASTM Designation: A 224).

Tests for Mechanical Properties.—The tensile properties, bend ductility, and soundness of

TABLE A.—MINIMUM REQUIREMENTS OF SHORT GAGE TENSION TEST.

Electrode	Base Plate	Tensile Strength, min, psi	Condition
E3N10	Nickel-copper	70 000	as welded
E3N11	Nickel	55 000	as welded
E3N12	Nickel-chromium-iron	80 000	as welded
E3N1B	Nickel-molybdenum and	plate under 3/16 in.	115 000	as welded
		plate 3/16 to 3/4 in., inclusive	100 000	
E3N1C	Nickel-molybdenum-chromium	Plate over 3/4 to 1 1/2 in., inclusive	90 000	as welded

[a] Age hardened at 1100 F for 20 hr, followed by furnace cool to 900 F and air or furnace cool to room temperature.

[b] Age hardened at 1300 F for 20 hr and air cooled to room temperature.

welds produced using filler metal which conforms with this specification is frequently determined during procedure qualification. It should be realized that the variables in the process, such as current, voltage, and welding speed; variables in the shielding medium, such as the gas mixture or flux; variables in the manual dexterity of the welder; and variables in the composition of the base metal influence the results which may be obtained. When properly controlled, however, these filler metals should give sound welds under widely varying conditions with tensile strength and ductility similar to that obtained by the manual covered arc welding electrodes. Tensile requirements for manual arc welding (covered) electrodes, as specified in the Specifications for Nickel and Nickel-Base Alloy Covered Welding Electrodes (AWS Designation A 5.11; ASTM Designation: B 295),[5] are shown in Table A.

When supplementary tests for mechanical properties are specified, the procedures should be in accordance with the Standard Methods of Mechanical Testing of Welds of the American Welding Society.

SPECIFICATION FOR ALUMINUM-ALLOY STANDARD STRUCTURAL SHAPES, ROLLED OR EXTRUDED

SB-308

(IDENTICAL WITH ASTM SPECIFICATION B 308-61 EXCEPT THAT ALLOYS 2014, 6062, 6066, AND 6351/AND CERTAIN TEMPERS HAVE BEEN DELETED)

Scope

1. This specification covers aluminum-alloy standard structural shapes, rolled or extruded, furnished in the alloys designated in Table I. The shapes are limited to those commonly produced by rolling such as angles, zees, channels, and I-beams.

Basis of Purchase

2. Orders for material under this specification shall include the following information:

(*1*) Quantity in pieces or pounds,
(*2*) Alloy (Section 4),
(*3*) Temper (Section 7),
(*4*) Type of section, dimensions (including a drawing if necessary), and length, and
(*5*) Whether inspection is required at the manufacturer's works (Section 15 (*a*)).

Manufacture

3. Materials used shall be such as to produce products that will conform to the requirements as to chemical composition and physical properties prescribed in this specification.

Chemical Composition

4. The structural shapes shall conform to the requirements as to chemical composition prescribed in Table I.

Sampling for Chemical Composition

5. Samples for chemical analysis shall be taken in accordance with the Method of Sampling Wrought Nonferrous Metals and Alloys for Determination of Chemical Composition (ASTM Designation: E 55), except that the weight of the prepared sample may be a minimum of 75 g. A portion shall be taken to represent each 2000 lb, or fraction thereof, of material of a given alloy in the shipment and a sample prepared from each portion. If agreed upon by the manufacturer and the purchaser, a composite sample representing all portions taken from a given alloy in the shipment may be used for analysis in lieu of analyzing samples from each portion. If the manufacturer has made an analysis of the material during the course of manufacture, he shall not be required to sample and analyze the finished product.

Methods of Chemical Analysis

6. The chemical analysis shall be made in accordance with the Standard Methods for Chemical Analysis of Aluminum and Aluminum-Base Alloys (ASTM Designation: E 34), or by any other approved methods agreed upon by the manufacturer and the purchaser. The analysis may be made spectrochemically provided that, in case of dispute, the results secured by Methods E 34 shall be the basis for acceptance.

Tensile Properties

7. The structural shapes shall be supplied in the temper of the alloy specified in the contract or order and shall conform to the requirements as to tensile properties prescribed in Table II.

Test Specimens

8. Tension test specimens shall be machined from the shape with the axis parallel to the length. They may be the standard sheet-type specimens shown in Fig. 7 of the Methods of Tension Testing of Metallic Materials (ASTM Designation: E 8) or the standard ½-in. in diameter specimen shown in Fig. 8 thereof, depending on the size of the structural shape. If the size of the material makes it impracticable to use either of these two specimens, round specimens of smaller size proportional to the standard specimen in Fig. 8 of Methods E 8 may be used provided that in no case shall the dimensions of the smallest specimen be less than the following:

Diameter of reduced section, in.	1/4
Length of reduced section, in.	1 1/4
Radius of fillet, in.	1/4
Diameter of end section, in.	3/8
Over-all length, in.:	
With threaded or shouldered ends	3
With plain cylindrical ends	4

Number of Tests

9. For shapes having a nominal weight of less than 1 lb per linear foot, one tension test specimen shall be taken for each shipment of 500 lb or fraction thereof; for larger shipments an additional specimen shall be taken for each 1000 lb or fraction thereof in excess of 500 lb. For shapes having a nominal weight of 1 lb or more per linear foot, one tension test specimen shall be taken for each shipment of 500 ft or fraction thereof; for larger shipments an additional specimen shall be taken for each 1000 ft or fraction thereof in excess of the first 500 ft. Other procedures for selecting samples may be employed if agreed upon by the manufacturer and the purchaser.

Methods of Testing

10. The tension tests shall be made in accordance with Methods E 8.

TABLE I.—CHEMICAL REQUIREMENTS.

NOTE 1.—Where single units are shown, these indicate the maximum amounts permitted.

NOTE 2.—Analysis shall regularly be made only for the elements specified in this table. If, however, the presence of other elements is suspected, or indicated in the course of routine analysis, further analysis shall be made to determine that these elements are not in excess of the amount specified.

NOTE 3.—The following applies to all specified limits in this table: For purposes of acceptance and rejection, an observed value or a calculated value obtained from analysis should be rounded off to the nearest unit in the last right-hand place of figures used in expressing the specified limit.

Alloy[a]	Aluminum, per cent	Copper, per cent	Silicon, per cent	Iron, per cent	Manganese, per cent	Magnesium, per cent	Zinc, per cent	Chromium, per cent	Titanium, per cent	Other Elements, per cent	
										Each	Total
5083	remainder	0.10	0.40	0.40	0.30 to 1.0	4.0 to 4.9	0.25	0.05 to 0.25	0.15	0.05	0.15
5086	remainder	0.10	0.40	0.50	0.20 to 0.7	3.5 to 4.5	0.25	0.05 to 0.25	0.15	0.05	0.15
5454	remainder	0.10	[b]	[b]	0.50 to 1.0	2.4 to 3.0	0.25	0.05 to 0.20	0.20	0.05	0.15
5456	remainder	0.10	[b]	[b]	0.50 to 1.0	4.7 to 5.5	0.25	0.05 to 0.20	0.20	0.05	0.15
6061	remainder	0.15 to 0.40	0.40 to 0.8	0.7	0.15	0.8 to 1.2	0.25	0.15 to 0.35	0.15	0.05	0.15

[a] These alloy designations were established in accordance with the American Standard Alloy Designation System for Wrought Aluminum (ASA No.: H 35.1-1957).

[b] The permissible maximum amount of iron plus silicon is 0.40 per cent.

TABLE II.—TENSILE REQUIREMENTS.

NOTE.—For purposes of determining conformance with this specification, each value for tensile strength and yield strength shall be rounded off to the nearest 100 psi, and each value for elongation shall be rounded off to the nearest 0.5 per cent, both in accordance with the rounding off method of the Recommended Practices for Designating Significant Places in Specified Limiting Values (ASTM Designation: E 29).

Alloy	Temper	Thickness, in.	Area, sq. in.	Tensile Strength, min, psi	Yield Strength, (0.2 per cent offset), min, psi	Elongation in 2 in. or 4 × Diameter, min, per cent
5083	O	all	all	38 000	16 000	16
	H112	all	all	40 000	24 000	12
5086	H112	all	all	35 000	18 000	12
5454	O	5.000 and under	32 and under	31 000[c]	12 000	14
	H112	5.000 and under	32 and under	31 000	12 000	12
	H311	5.000 and under	32 and under	31 000	16 000	8
5456	O	5.000 and under	32 and under	42 000	19 000	16
	H111	5.000 and under	32 and under	44 000	26 000	12
	H112	5.000 and under	32 and under	42 000	19 000	12
	H311	5.000 and under	32 and under	42 000	25 000	12
6061	T6	...	...	38 000	35 000	10

[c] The maximum tensile strength for this temper shall be 41,000 psi.

Retests

11. If any tension test specimen fails to conform to the requirements prescribed in Table II, two additional specimens shall be selected from other pieces in the lot and tested. If either of these specimens fails to conform to the applicable requirements, the material may be rejected. If, however, the failure of the specimens to conform with the requirements is the result of an inadequate thermal treatment, the material may be reheat-treated and resampled in accordance with Section 9. Only one such reworking of the material shall be permitted.

Permissible Variations in Dimensions

12. (*a*) Variations from the specified dimensions for the structural shape ordered shall not exceed the amounts prescribed in Tables III to VII, inclusive.

(*b*) *Flatness (Flat Surfaces).*—The allowable deviation from flat shall be 0.004 in. per in. of width, with a 0.004-in. minimum.

(*c*) *Squareness of Cut Ends.*—The allowable deviation from square shall be 1 deg.

(*d*) *Weight.*—The allowable deviation from nominal weight of a lot or shipment shall be ±2½ per cent for sizes 3 in. and larger. For sizes smaller than 3 in., only cross-sectional dimensions and length tolerances apply.

Workmanship and Finish

13. Unless otherwise agreed upon by the manufacturer and the purchaser, the structural shapes may be supplied in the mill finish and shall be of uniform quality and temper, clean, sound, commercially straight, and free from injurious defects.

Packing, Marking, Shipping

14. (*a*) The material shall be packed in such a manner as to prevent damage in ordinary handling and transportation. The type of packing and gross weight of individual containers shall be left to the discretion of the supplier unless otherwise agreed upon. Each package or container shall contain only one size, alloy, or temper of material when packed for shipment unless otherwise agreed upon.

(*b*) Each package or container shall be marked with the purchase order number, size of material, specification number, alloy and temper (the latter to be in accordance with the ASA and ASTM codification systems (ASA No. H35.1-1957 and ASTM Designation: B 296), gross and net weights, and name of the manufacturer.

(*c*) Packages or containers shall be such as to insure acceptance by common or other carriers for safe transportation at the lowest rate to the point of delivery.

Inspection

15. (*a*) If the purchaser desires to make an inspection of the material at the manufacturer's works where the material

TABLE III.—PERMISSIBLE VARIATIONS IN DIMENSIONS.

Shapes	Nominal Dimensions	Permissible Variations in Nominal Dimensions, plus or minus[a]			
		Alloys 5083, 5086, 5456		Other Alloys	
		per cent	in.	per cent	in.
I-Beams	*t* thickness	4	0.015 min	2½	0.010 min
	b flange width	4	...	4	...
	d depth	...	+3/32, −1/16	...	+3/32, −1/16
H-Beams	*t* thickness	4	0.015 min	2½	0.010 min
	b flange width	4	...	4	...
	d depth	2½	1/16 min	2½	1/16 min
Channels	*t* thickness	4	0.015 min	2½	0.010 min
	b flange width	4	...	4	...
	d depth	...	+3/32, −1/16	...	+3/32, −1/16
Angles	*t* thickness	4	0.015 min	2½	0.010 min
	b flange width	2½	1/16 min	2½	1/16 min
Tees	*t* thickness	4	0.015 min	2½	0.010 min
	b flange width	4	...	4	...
	d stem height	2½	1/16 min	2½	1/16 min
Zees	*t* thickness	4	0.015 min	2½	0.010 min
	b flange width	2½	1/16 min	2½	1/16 min
	d depth	2½	1/16 min	2½	1/16 min

[a] These tolerances do not apply to structural shapes produced by extrusion if width or depth is 8.000 in. or over.

TABLE IV.—PERMISSIBLE VARIATIONS IN LENGTH.

Specified Width or Depth, Whichever is Greater, in.	Allowable Deviation from Specified Length, plus, in.			
	Specified Length, ft			
	Up to 12, incl	Over 12 to 30, incl	Over 30 to 50, incl	Over 50
Under 3.000	1/8	1/4	3/8	1
3.000 to 7.999	5/16	5/16	7/16	1
8.000 and over	1/4	3/8	1/2	1

TABLE V.—PERMISSIBLE DEVIATION FROM STRAIGHT.

Length, ft	Allowable Deviation from Straight, in.
Up to 5, incl	0.125
Over 5	length in ft × 0.025

is made, it shall be so stated in the contract or purchase order.

(*b*) If the purchaser elects to have the inspection made at the manufacturer's works, the manufacturer shall afford the inspector representing the purchaser all reasonable facilities, without charge, to satisfy him that the material is being furnished in accordance with these specifications. All tests and inspection shall be so conducted as not to interfere unnecessarily with the operation of the works.

TABLE VI.—PERMISSIBLE DEGREE OF TWIST.

Specified Width or Depth, Whichever is Greater, in.	Permissible Variation from Straight, deg	
	In Each Foot of Length	In Total Length of Piece
Under 1.500	1	1 × *L*[a]
1.500 to 2.999	½	½ × *L*[a], but not over 5 deg
3.000 and over	¼	¼ × *L*[a], but not over 3 deg

[a] *L* equals the length in feet.

TABLE VII.—PERMISSIBLE DEVIATION IN ANGULARITY.

Nominal Leg, Web, or Flange Thickness, Whichever is Least, in.	Allowable Deviation From Specified Angle, plus or minus, deg
Under 0.188	2
0.188 to 0.749	1½
0.750 and over	1

NOTE.—The values obtained for the tensile properties covered by this specification are not seriously affected by variations in speed of testing. A considerable range of testing speed is permissible; however, the rate of stressing to the yield strength should not exceed 100,000 psi per min, and above the yield strength the movement per minute of the head under load should not exceed 0.5 in. per in. of gage length (or distance between grips for specimens not having reduced sections). Care must be exercised, especially when making yield strength determination, that the speed of testing does not exceed the ability of the strain- and load-indicating equipment to function satisfactorily.

Rejection

16. Material failing to conform to the requirements of these specifications or in which defects are discovered during subsequent manufacturing operations may be rejected and, if rejected, the manufacturer's responsibility shall be limited to replacing the rejected material without charge to the purchaser. The full weight of the rejected original material shall be returned to the manufacturer.

SPECIFICATION FOR COPPER-SILICON ALLOY SEAMLESS PIPE AND TUBE

SB-315

(IDENTICAL WITH ASTM SPECIFICATION B 315-61)

Scope

1. This specification covers annealed copper-silicon alloy seamless pipe in all standard pipe sizes, both regular and extra-strong, and seamless tube in straight lengths for general engineering purposes. The commercially available alloys are shown in Table I.

Definitions

2. The following definitions shall apply:

(*a*) *Pipe.*—Seamless tube conforming to the particular dimensions commercially known as "Standard Pipe Size."

(*b*) *Tube.*—A hollow product of round or any other cross-section, having a continuous periphery.

(*c*) *Average Diameter.*—The average outside or inside diameter of a tube is the average of the maximum and minimum outside diameters or the maximum and minimum inside diameters, whichever is applicable, as determined at any one cross-section of the tube.

Basis of Purchase

3. Orders for material under this specification shall include the following information:

(*1*) Alloy (Section 5, Table I),

(*2*) Pipe size (regular or extra-strong) (Section 13(*b*)), or tube dimensions (diameter and wall thickness) (Section 13(*c*) and (*d*)),

(*3*) Length (Section 13(*e*)),

(*4*) Total length of each size, and

(*5*) Finish (Section 14(*b*)).

In the case of material to be used for welding or brazing, orders shall specify "Specially Cleaned."

Manufacture

4. (*a*) The material shall be of such quality and purity that the finished product shall have the properties and characteristics prescribed in this specification.

(*b*) The material shall be produced by either hot or cold working operations, or both. It shall be finished, unless otherwise specified, by such cold working and annealing or heat treatment as may be necessary to meet the properties specified.

Chemical Composition

5. The material shall conform to the requirements as to chemical composition prescribed in Table I.

Temper

6. All pipe and tube shall be furnished in the annealed condition. The degree of anneal shall be sufficient to show complete recrystallization.

Tensile Properties

7. The material shall conform to the following requirements as to tensile properties:

Tensile strength, min, psi	50 000
Yield strength, psi[a]	15 000 to 29 000
Elongation in 2 in., min, per cent	35

[a] Stress corresponding to 0.5 per cent strain.

Hydrostatic Test

8. (*a*) For the purpose of hydrostatic testing only, a number of lengths of pipe or tube equivalent to 0.2 per cent of the shipment shall be selected at random for the test prescribed in Paragraph (*b*).

TABLE I.—CHEMICAL REQUIREMENTS.

	Alloy A	Alloy Number[a]	
		A-7	A-8
Copper, min, per cent	94.8	.....	.....
Silicon, per cent	2.8 to 3.8	2.8 to 3.6	3.15 to 3.8
One or more of the following elements may be present within the limits specified below, subject to limits of the specific alloys as given in the columns headed "Alloy Number":			
Manganese, per cent	1.35 max	0.50 to 1.35	0.20 to 0.95
Iron, max, per cent	0.50	0.25	0.50
Lead, max, per cent	0.05	0.05	0.05
Aluminum, max, per cent	.....	.....	0.01
Sum of above elements, min, per cent	99.5	99.5	99.5

[a] For the information of those using this specification, alloys designated A-7 and A-8 are the commercially available specific alloys, and the designations A-7 and A-8 are for convenience only and have no commercial significance. Analysis shall regularly be made only for the elements specifically mentioned in this table for alloy Nos. A-7 and A-8. If the presence of other elements is suspected, or indicated in the course of routine analysis, further analysis shall be made either chemically or spectrographically to determine that the total of these other elements is not in excess of 0.50 per cent.

(*b*) Each length selected in accordance with Paragraph (*a*) shall stand, without showing weakness or defects, an internal hydrostatic pressure sufficient to subject the material to a fiber stress of 7000 psi, determined by the following formula for thin hollow cylinders under tension. The pipe or tube need not be tested at a hydrostatic pressure of over 1000 psi unless so specified.

$$P = \frac{2tS}{D}$$

where:

P = pressure in pounds per square inch,

t = thickness of pipe or tube wall in inches,

D = outside diameter of the pipe or tube in inches, and

S = allowable stress of the material = 7000 psi.

Sampling and Number of Tests

9. (*a*) *Sampling.*—The lot size, portion size, and selection of pieces shall be as follows:

Lot Size.—For tube, the lot size shall be 5000 lb or fraction thereof. For pipe, the lot size shall be as follows:

Nominal Pipe Size, in.	Lot Weight, lb
Up to 1½, incl	5 000 or fraction thereof
Over 1½ to 4, incl	10 000 or fraction thereof
Over 4	40 000 or fraction thereof

Portion Size.—Sample pieces shall be taken for test purposes from each lot according to the following schedule:

Number of Pieces in Lot	Number of Sample Pieces to be Taken
1 to 50	1
51 to 200	2
201 to 1500	3
Over 1500	0.2 per cent of total number of pieces in the lot

(*b*) *Chemical Analysis.*—Samples for chemical analysis shall be taken in accordance with the Method of Sampling Wrought Non-Ferrous Metals and Alloys for Determination of Chemical Composition (ASTM Designation: E 55). The minimum weight of the composite sample that is to be divided into three equal parts shall be 150 g.

(*c*) *Tension Tests.*—For the tension tests, a specimen shall be taken from each of the pieces selected in accordance with Paragraph (*a*). The required tension test shall be made on each of the specimens so selected.

TABLE II.—DIMENSIONS AND WEIGHTS OF COPPER-SILICON ALLOY PIPE, STANDARD PIPE SIZES.

Pipe Size, in.	Nominal Dimensions, in.			Cross-Section Area of Bore, sq in.	Nominal Weight, lb per ft
	Outside Diameter	Inside Diameter	Wall Thickness		
Regular					
⅛	0.405	0.281	0.062	0.062	0.247
¼	0.540	0.376	0.082	0.110	0.438
⅜	0.675	0.495	0.090	0.192	0.614
½	0.840	0.626	0.107	0.307	0.914
¾	1.050	0.822	0.114	0.531	1.24
1	1.315	1.063	0.126	0.887	1.75
1¼	1.660	1.368	0.146	1.47	2.57
1½	1.900	1.600	0.150	2.01	3.05
2	2.375	2.063	0.156	3.34	4.03
2½	2.875	2.501	0.187	4.91	5.85
3	3.500	3.062	0.219	7.37	8.34
3½	4.000	3.500	0.250	9.62	10.9
4	4.500	4.000	0.250	12.6	12.3
5	5.562	5.062	0.250	20.1	15.4
6	6.625	6.125	0.250	29.5	18.5
8	8.625	8.001	0.312	50.3	30.2
10	10.750	10.020	0.365	78.8	44.1
12	12.750	12.000	0.375	113.0	53.9
Extra Strong					
⅛	0.405	0.205	0.100	0.033	0.354
¼	0.540	0.294	0.123	0.068	0.590
⅜	0.675	0.421	0.127	0.139	0.808
½	0.840	0.542	0.149	0.231	1.19
¾	1.050	0.736	0.157	0.425	1.63
1	1.315	0.951	0.182	0.710	2.39
1¼	1.660	1.272	0.194	1.27	3.30
1½	1.900	1.494	0.203	1.75	4.00
2	2.375	1.933	0.221	2.94	5.53
2½	2.875	2.315	0.280	4.21	8.44
3	3.500	2.892	0.304	6.57	11.3
3½	4.000	3.358	0.321	8.86	13.7
4	4.500	3.818	0.341	11.5	16.5
5	5.562	4.812	0.375	18.2	22.6
6	6.625	5.751	0.437	26.0	31.4
8	8.625	7.625	0.500	45.7	47.2
10	10.750	9.750	0.500	74.7	59.5

Methods of Test

10. (*a*) The properties enumerated in this specification shall, in case of disagreement, be determined in accordance with the following applicable methods of the American Society for Testing Materials:

Test	ASTM Designation[a]
Chemical analysis	E 54
Tension test	E 8,

(See also Section 10(*b*), (*c*), and (*d*).)

[a] These designations refer to the following ASTM methods of test:
E 54, Methods for Chemical Analysis of Special Brasses and Bronzes, and
E 8, Methods of Tension Testing of Metallic Materials.

(*b*) Tension test specimens shall be of the full section of the tube and shall conform to the requirements of Section 13(*a*), ASTM Methods E 8, unless the limitations of the testing machine pre-

clude the use of such a specimen. Test specimens conforming to type No. 1 of Fig. 13 (Section 13(*b*) of ASTM Methods E 8) may be used when a full section specimen cannot be tested.

(*c*) Whenever tension test results are obtained from both full size and from machined test specimens and they differ, the results obtained from full size test specimens shall be used to determine conformance to the specification requirements.

(*d*) Tension test results on material covered by this specification are not seriously affected by variations in speed of testing. A considerable range of testing speed is permissible; however, the rate of stressing to the yield strength should not exceed 100,000 psi per minute. Above the yield strength the movement per minute of the testing machine head under load should not exceed 0.5 in. per in. of gage length (or distance between grips for full section specimens).

Significance of Numerical Limits

11. For purposes of determining compliance with the specified limits for requirements of the properties listed in the following table, an observed value or a calculated value shall be rounded off as indicated in accordance with the rounding-off method of the Recommended Practices for Designating Significant Places in Specified Limiting Values (ASTM Designation: E 29):

Property	Rounded-Off Unit for Observed or Calculated Value
Chemical composition	nearest unit in the last right-hand place of figures of the specified limit
Tensile strength Yield strength	nearest 1000 psi
Elongation	nearest 1 per cent

Retests

12. (*a*) If any test specimen shows defective machining or develops flaws, it may be discarded and another specimen substituted.

(*b*) If the percentage elongation of any tension test specimen is less than that specified and any part of the fracture is outside the middle two thirds of the gage length or in a punched or scribed mark within the reduced section, a retest shall be allowed.

(*c*) If the results of any test made to determine the physical properties fail to meet the specified limits, this test shall be repeated on each of two additional specimens taken from different pieces and the results of both of these tests shall comply with the specified requirements.

(*d*) If the chemical analysis fails to conform to the specified limits, analysis shall be made on a new composite sample prepared from additional pieces selected in accordance with Section 9(*a*). The results of this retest shall comply with the specified requirements.

Dimensions, Weights, and Tolerances

13. (*a*) *General:*

(*1*) The standard method of specifying wall thickness shall be in decimal fractions of an inch.

(*2*) For the purpose of determining conformance with the dimensional requirements prescribed in this specification, any measured value outside the specified limiting values for any dimension may be cause for rejection.

(*3*) Tolerances on a given tube may be specified with respect to any two, but not all three, of the following: outside diameter, inside diameter, wall thickness.

TABLE III.—WEIGHT TOLERANCES FOR STANDARD PIPE SIZES.

NOTE.—The weight of pipe shall not vary from the nominal weight per foot prescribed in Table I by more than the values shown below:

Pipe Size, in.	Tolerance, plus and minus, per cent
6 and under	5
Over 6 to 8, incl	7
Over 8	8

TABLE IV.—WALL THICKNESS TOLERANCES FOR STANDARD PIPE SIZES.

NOTE.—The wall thickness of standard size pipe at any point shall not be less than that prescribed in Table II by more than the percentages specified below:

Pipe Size, in.	Wall Thickness Tolerances, per cent[a]	
	Minus	Plus
6 and under	5	Limited only by weight tolerances
Over 6 to 8, incl	7	
Over 8	8	

[a] Expressed to the nearest 0.001 in.

NOTE.—Blank spaces in the tolerance tables indicate either that the material is not generally available or that no tolerances have been established.

(*b*) *Dimensions and Weights.* — Dimensions and weights of standard pipe sizes shall be in accordance with Table II. The weight tolerances for pipe shall be in accordance with Table III.

(*c*) *Wall Thickness Tolerances.*—Wall thickness tolerances shall be in accordance with Table IV for pipe and Table V for tube.

(*d*) *Diameter Tolerances.*—Diameter tolerances shall be in accordance with Table VI.

(*e*) *Length Tolerances:*

(*1*) Length tolerances shall be in accordance with Table VII.

(*2*) *Schedule of Tube Lengths.*— Specific and stock lengths with ends shall be in accordance with Table VIII.

(*f*) *Squareness of Cut.*—The departure from squareness of the end of any tube shall not exceed the following:

Tube Size Actual Outside Diameter in.	
Up to 5/8, incl	0.010 in.
Over 5/8	0.016 in. per in. of diameter

(*g*) *Unit Weight.*—One cubic inch of the material covered by the specification shall be assumed to weigh 0.308 lb.

Workmanship and Finish

14. (*a*) The material shall be free from defects of a nature that interfere with normal commercial applications. It shall be well cleaned and free from dirt.

(*b*) The material may be supplied in the following finishes:

(*1*) *Specially Cleaned.* — Commercially free of all oxides. This material has the golden color of the alloy. It is intended for brazing and welding operations.

(*2*) *Plain, Pickled,* or with dull iridescent film on both the inside and outside surfaces. Plain pickled material normally has a brick red color, with cuprous and silicon oxides still adherent.

Packing and Marking

15. (*a*) The material shall be packed in such a manner as to provide reasonable protection against damage in ordinary handling and transportation.

(*b*) Each box, crate, or bundle shall be legibly marked with the purchase order number, specification designation, size, gross and net weights, and the name of the manufacturer.

TABLE V.—WALL THICKNESS TOLERANCES FOR TUBE (NOT APPLICABLE TO PIPE).

NOTE: *Maximum Deviation at Any Point.*—The following tolerances are plus and minus; if tolerances all plus or all minus are desired, double the values given.

Wall Thickness, in.	Outside Diameter, in.						
	1/32 to 1/8, incl	Over 1/8 to 5/8, incl	Over 5/8 to 1, incl	Over 1 to 2, incl	Over 2 to 4, incl	Over 4 to 7, incl	Over 7 to 10, incl
Under 0.018	0.0025	0.0015	0.002	0.0025	....	....	....
0.018, incl, to 0.025	0.004	0.0025	0.0025	0.003	....	....	....
0.025, incl, to 0.035	0.004	0.003	0.003	0.004	0.005	....	....
0.035, incl, to 0.058	0.004	0.004	0.0045	0.0045	0.0065	0.009	....
0.058, incl, to 0.083	....	0.0045	0.005	0.005	0.0075	0.010	0.013
0.083, incl, to 0.120	....	0.005	0.0065	0.0065	0.009	0.011	0.014
0.120, incl, to 0.165	....	0.007	0.007	0.0075	0.010	0.013	0.015
0.165, incl, to 0.220	....	....	0.009	0.010	0.013	0.015	0.018
0.220, incl, to 0.284	....	....	0.012	0.013	0.015	0.018	0.020
0.284, incl, to 0.380	....	....	....	0.015	0.018	0.020	0.023
0.380 and over	....	....	....	6 per cent	6 per cent	8 per cent	8 per cent

TABLE VI.—AVERAGE DIAMETER TOLERANCES FOR TUBE (NOT APPLICABLE TO PIPE).

Specified Diameter, in.	Tolerance, plus and minus, in.[a]
Up to 1/8, incl	0.003[b]
Up to 1/8, incl	0.0025[c]
Over 1/8 to 5/8, incl	0.0025
Over 5/8 to 1, incl	0.003
Over 1 to 2, incl	0.004
Over 2 to 3, incl	0.005
Over 3 to 4, incl	0.006
Over 4 to 5, incl	0.008
Over 5 to 6, incl	0.009
Over 6 to 8, incl	0.010
Over 8 to 10, incl	0.013

[a] Tolerance applies to inside or outside diameter, except as noted.
[b] On inside diameter.
[c] On outside diameter.

TABLE VII.—LENGTH TOLERANCES.

NOTE.—Tolerances are all plus; if all minus tolerances are desired, use the same values; if tolerances plus and minus are desired, halve the values given.

	Tolerances, in.[a]		
	For Outside Diameters up to 1 in., incl	For Outside Diameters over 1 to 4 in., incl	For Outside Diameters over 4 in.
Specific lengths:			
Up to 6 in., incl	1/32	1/16	...
Over 6 in. to 2 ft, incl	1/16	3/32	1/8
Over 2 to 6 ft, incl	3/32	1/8	1/4
Over 6 to 14 ft, incl	1/4	1/4	1/4
Over 14 ft	1/2	1/2	1/2
Specific lengths with ends	1	1	1
Stock lengths with or without ends	1[b]	1[b]	1[b]

[a] Applicable only to full-length pieces.
[b] As stock lengths are cut and placed in stock in advance of orders, departure from this tolerance is not practicable.

Inspection

16. The manufacturer shall afford the inspector representing the purchaser all reasonable facilities, without charge, to satisfy him that the material is being furnished in accordance with the specified requirements.

Rejection

17. Material that fails to conform to this specification will be rejected, and the manufacturer shall be notified within 30 days after receipt of the material.

TABLE VIII.—SCHEDULE OF TUBE LENGTHS (SPECIFIC AND STOCK) WITH ENDS.

Outside Diameter, in.	Nominal Length, ft	Shortest Permissible Length[a] per cent of Nominal Length	Maximum Permissible Weight of Ends, per cent of Lot Weight
Up to 1, incl	6 to 20, incl	70	20
Over 1 to 2, incl	6 to 20, incl	60	25
Over 2 to 3, incl	6 to 20, incl	55	30
Over 3 to 4, incl	6 to 20, incl	50	40

[a] Expressed to nearest 1/2 ft.

SPECIFICATION FOR NICKEL-MOLYBDENUM ALLOY PLATE AND SHEET

SB-333

(IDENTICAL WITH ASTM SPECIFICATION B 333-58T)

Scope

1. (*a*) This specification covers corrosion resistant nickel-molybdenum alloy plate and sheet in the hot-rolled, annealed and descaled condition, unless otherwise agreed upon between the manufacturer and the purchaser.

(*b*) *Definitions.*—The following definitions shall apply unless otherwise agreed upon between the manufacturer and the purchaser:

Definition	Thickness, in.
Hot-rolled plate	3/16 and over
Hot-rolled sheet	0.187 and under

(*c*) It should be understood that this specification is general. Provision is made herein for material suitable for the general run of drawing, forming, stamping, bending, joining operations, and all other common methods of fabrication. Since the material may be used for purposes where the requirements of the operations are too particular to be prescribed in a general specification, it is advisable in these instances for the purchaser to submit samples or drawings to the manufacturer and secure an adjustment of processing to suit the actual operations to which the material is to be subjected.

Basis of Purchase

2. Orders for material under this specification shall include information with respect to the following:

(*a*) *Dimensions.*—Thickness (in decimals of an inch, not gage number), width and length (inch or fractions of an inch).

(*b*) *Fabrication Details.*—Not mandatory, but are helpful to manufacturer:

(*1*) *Heat Treatment.*—See Appendix, Section (*C*).

(*c*) *Special Requirements.*—State nature and details of requirements (Section 22).

(*d*) *Certification and Inspection.*—State at the time the order is placed which of the following options, if any, is desired:

(*1*) Furnish *Certificate of Compliance* (includes chemical analyses and certification of compliance but does not include mechanical properties) (Section 25 (*b*)).

(*2*) Furnish *Test Reports* (includes chemical analyses and mechanical properties) (Section 25 (*c*)).

(*3*) *Samples for Check Analysis.*—Whether samples for check analysis should be furnished (Section 25 (*d*)).

(*4*) *Inspection at Place of Manufacture.*—Which tests are to be witnessed (Section 25 (*e*)).

Material

3. The material shall be of such quality that the finished product shall have the chemical composition, properties, and characteristics described in this specification.

Manufacture

4. (*a*) Plate and sheet shall be produced by hot-working, annealing, descaling, cold-working, reannealing, and polishing, or by any combination of these processes.

(*b*) Plate and sheet shall be produced to the condition, finish, and dimensions specified.

Chemical Composition

5. The material shall conform to the following requirements as to chemical composition:[a]

Chromium, max, per cent	1.00
Iron, per cent	4.00 to 6.00
Carbon, max, per cent	0.05
Silicon, max, per cent	1.00
Cobalt, max, per cent	2.50
Manganese, max, per cent	1.00
Vanadium, per cent	0.20 to 0.40
Molybdenum, per cent	26.00 to 30.00
Phosphorus, max, per cent	0.025
Sulfur, max, per cent	0.030
Nickel, per cent	remainder

[a] For the applicable rounding-off procedures, see Section 14(*b*).

Samples for Chemical Analysis

6. (*a*) Unless otherwise agreed upon by the manufacturer and the purchaser, heat (ladle) analyses furnished by the manufacturer shall be accepted as defining the composition of the material furnished.

(*b*) If samples for check analysis are desired, they shall be so specified by the purchaser, at the time of placement of the order. Samples shall be taken from material representative of each 5000 lb, or fraction thereof, of the finished material, and shall conform to the requirements of Section 5.

(*c*) Such samples for chemical analysis shall be taken in accordance with the procedure described in the Method of Sampling Wrought Non-Ferrous Metals and Alloys for Determination of Chemical Composition (ASTM Designation: E 55). The lot size, portion size and selection of pieces shall be as follows:

Lot Size.—5,000 lb, or fraction thereof, of finished material.

Portion Size.—Pieces from four individual lengths of finished material. If the lot consists of less than four lengths, a piece shall be taken from each individual length.

Minimum Weight of Composite Sample.—150 g divided into three equal parts, one for the manufacturer, one for the purchaser, and one for an umpire, if necessary.

(*d*) Samples for check analyses, when requested after the date of placement of the order, shall be as agreed upon between the manufacturer and the purchaser.

Lots for Mechanical Testing

7. Unless otherwise specified, a lot for mechanical testing shall be defined as follows:

Plate.—A lot of plate shall consist of the products resulting from the rolling of one heat of material in the same condition and specified thickness.

Sheet.—A lot of sheet shall consist of material from one heat in the same condition, finish, and specified thickness but in no case more than 8,000 lb.

NOTE 1.—Where material cannot be identified by heat, a lot shall consist of not more than 500 lb of material in the same thickness and condition, except that for plates weighing over 500 lb only one specimen shall be taken.

Sampling for Mechanical Tests

8. (*a*) Samples of the material to provide test specimens for mechanical tests shall be taken from such locations in each lot as to be representative of that lot.

(*b*) When samples are to be taken after delivery, the purchaser of material ordered to cut lengths may arrange with the manufacturer to have an excess length furnished or request on the order additional material of adequate size to provide sample coupons for inspection purposes.

TABLE I.—MECHANICAL PROPERTIES[a] FOR PLATE AND SHEET.

Specified Thickness, in.	Tensile Strength, min, psi	Yield Strength[c] (0.2 per cent offset), min, psi	Elongation in 2 in.,[d] min, per cent	Rockwell Hardness,[b] max
HOT-ROLLED ANNEALED PLATE				
3/16 to 3/4, incl	100 000	45 000	40	C-24
Over 3/4 to 2 1/2, incl	90 000	45 000	35	C-24
HOT-ROLLED ANNEALED SHEET				
All	115 000	50 000	45	C-23

[a] For applicable rounding-off procedures, see Section 14(*b*).

[b] Hardness values are shown for information purposes only and are not to be used as the basis of acceptance or rejection. For approximate hardness conversions, see ASTM Hardness Conversion Tables E 140.

[c] The yield strength shall be determined by the offset method using a crosshead speed of approximately 0.05 in. per min until the yield strength has been exceeded, after which the speed may be increased to not more than 0.50 in. per min to fracture for determining the tensile strength, see Section 14(*c*).

[d] Elongation measured in a gage length of 4× diameter for machined round test specimens, in accordance with Section 12(*b*).

Mechanical Properties

9. The material shall conform to the requirements as to mechanical properties prescribed in Table I.

Hardness

10. Material tested in a single thickness shall conform to the Rockwell or equivalent hardness requirements prescribed in Table I with the exception that hardness values are informative only for those conditions of plate and sheet for which tensile requirements have been specified.

NOTE 2.—For hardness conversions, see the Hardness Conversion Tables for Metals (Relationship Between Brinell Hardness, Diamond Pyramid Hardness, Rockwell Hardness, and Rockwell Superficial Hardness) (ASTM Designation: E 140)

NOTE 3.—Caution should be observed in using the Rockwell test on thin material, as the results may be affected by the specimen thickness. For thicknesses under 0.050 in. the use of the Rockwell superficial or the Vickers hardness test is suggested.

Grain Size for Sheet

11. Sheet shall conform to the grain sizes as illustrated in Plate I of the Methods for Determining the Average Grain Size of Metals (ASTM Designation: E 112). The requirements shall be as indicated in Table II.

Test Specimens

12. (*a*) Tension test specimens from material 1/2 in. and under in thickness shall be of the full thickness of the material, and shall be machined to the form and dimensions shown in Fig. 7 of the Methods of Tension Testing of Metallic Materials (ASTM Designation: E 8).

(*b*) Tension test specimens from material over 1/2 in. in thickness may be of the full thickness of the material, or machined to the form and dimensions shown in Fig. 8 of Methods E 8. In case of dispute, the referee method shall be to prepare specimens by machining to the form and dimensions shown in Fig. 8 of Methods E 8.

NOTE 4.—The following sample preparation is recommended for nickel-molybdenum alloys: For full thickness specimens, a box fixture is used to hold the samples while they are ground to overall size. This fixture consists of a rectangular frame mounted on a rectangular base held together by set screws. Samples are placed on edge in the fixture with sufficient back strips to fill the box. These are locked in place with set screws through the side of the top rectangle. The strips are tapped down flush with the bottom before locking. The edges are then surfaced on a cylindrical grinder until they are even. The top part of the fixture is inverted and the process repeated except that the samples are surfaced to the finished width.

To rough out the reduced test section, the strips are clamped in "C" clamps, tapped flush, and the complete assembly held with a grinding vise on a grinding table. Grinding is done perpendicular to the longitudinal axis of the strip with a wheel at least as fine as 38 grit. Enough stock is left to finish by grinding parallel to the longitudinal axis. All cross grind marks are removed.

The entire edge is polished with an emery (approximately 90 grit) covered buffing wheel. The sharp edges of the specimen are slightly rounded using a 120 grit seamless belt on a belt surfacer. The test section of round specimens should be finish ground and if necessary polished to remove grind marks.

(*c*) Tension test specimens from plate and sheet shall be taken transverse to the direction of rolling when width will permit.

Number of Tests

13. (*a*) *Tension Tests.*—Unless other-

TABLE II.—GRAIN SIZE[a] FOR HOT-ROLLED ANNEALED SHEET.

Thickness, in.	Calculated Diameter of Average Grain Section, max		Corresponding ASTM Micro-Grain Size No.
	mm	in.	
0.125 and under	0.120	0.0047	3.0
Over 0.125	0.210	0.0083	1.5

[a] For applicable rounding-off procedures, see Section 14(*b*).

wise specified, one tension test shall be made on each lot of material as defined in Section 7.

(*b*) *Hardness Tests.*—Unless otherwise specified, hardness tests need not be made where hardness requirements are designated to be "for information only."

Methods of Test and Chemical Analysis

14. (*a*) The chemical composition and mechanical properties of the material as enumerated in this specification shall be determined, in case of disagreement, in accordance with the following methods of the American Society for Testing Materials:

Test	ASTM Designation[a]
Chemical Analysis	[b]
Tension	E 8
Rockwell Hardness	E 18
Hardness Conversion	E 140
Grain Size	E 112
Rounding-off Procedure	E 29
Method of Sampling	E 55

[a] These designations refer to the following methods of testing:
E 8, Methods of Tension Testing of Metallic Materials,
E 18, Methods of Test for Rockwell Hardness and Rockwell Superficial Hardness of Metallic Materials,
E 140, Hardness Conversion Tables for Metals (Relationship Between Brinell Hardness, Diamond Pyramid Hardness, Rockwell Hardness, and Rockwell Superficial Hardness),
E 112, Methods for Estimating the Average Grain Size of Metals,
E 29, Recommended Practices for Designating Significant Places in Specified Limiting Values, and
E 55, Method of Sampling Wrought Non-Ferrous Metals and Alloys for Determination of Chemical Composition.

[b] There are no generally accepted referee methods for chemical analysis of nickel-molybdenum alloys.

TABLE III.—PERMISSIBLE VARIATIONS IN THICKNESS OF PLATE.[d]

Specified Thickness, in.	Permissible Variations in Thickness, in.[a]	
	Plus	Minus[b]
3/16 to 7/32, incl.	0.021	0.010
Over 7/32 to 1/4, incl.	0.024	0.010
Over 1/4 to 3/8, incl.	0.027	0.010
Over 3/8 to 1/2, incl.	0.030	0.010
Over 1/2 to 5/8, incl.	0.035	0.010
Over 5/8 to 3/4, incl.	0.040	0.010
Over 3/4 to 7/8, incl.	0.045	0.010
Over 7/8 to 1, incl.	0.050	0.010
Over 1 to 2 1/2, incl.	5[c]	0.010

[a] Measured 3/8 in. or more from any edge.
[b] Buffing or grinding for removal of light surface imperfections shall be permitted. The depth of such buffed or ground areas shall not exceed 0.010 in. under nominal thickness.
[c] Expressed as per cent of thickness.
[d] Applicable to material 48 in. and under in width.

(*b*) For purposes of determining compliance with the specified limits for requirements of the properties listed in the following table, an observed value or a calculated value shall be rounded off as indicated below, in accordance with the rounding-off method of the Recommended Practices for Designating Significant Places in Specified Limiting Values (ASTM Designation: E 29).

Test	Rounded-off Unit for Observed or Calculated Value
Chemical composition, hardness, and tolerances (when expressed in decimals)	nearest unit in the last right-hand place of figures of the specified limit.
Tensile strength, yield strength	nearest 1000 psi.
Elongation	nearest 1 per cent
Grain size:	
0.060 mm (0.0024 in.) or larger	nearest multiple of 0.005 mm (0.0002 in.)
less than 0.060 mm (0.0024 in.)	nearest multiple of 0.002 mm (0.0001 in.)

(*c*) In lieu of the offset method, the minimum yield strength may be determined as the stress required to produce the elongation under load as calculated by the following formula:

$$X = \left(\frac{Y}{Z} + 0.002\right) \times \text{gage length in inches}$$

where:

X = limiting extension under load in inches,
Y = specified yield strength at 0.2 per cent offset, from Table I, and
Z = modulus of elasticity (26,000,000 psi).

In case of dispute the offset method shall be used as the referee procedure.

(*d*) The measurement of grain size may be carried out by the planimetric method, the comparison method or the intercept method described in Methods E 112. However, in case of disagreement the "referee" method for determining grain size shall be the planimetric method.

TABLE IV.—PERMISSIBLE VARIATIONS IN THICKNESS OF SHEET.[c]

Specified Thickness, in.	Permissible Variations in Thickness,[a] in. (All Widths)	
	Plus	Minus[b]
0.025 to 0.034, incl.	0.004	0.004
Over 0.034 to 0.056, incl.	0.005	0.005
Over 0.056 to 0.070, incl.	0.006	0.006
Over 0.070 to 0.078, incl.	0.007	0.007
Over 0.078 to 0.093, incl.	0.008	0.008
Over 0.093 to 0.109, incl.	0.009	0.009
Over 0.109 to 0.125, incl.	0.010	0.010
Over 0.125 to 0.140, incl.	0.013	0.010
Over 0.140 to 0.171, incl.	0.016	0.010
Over 0.171 to 0.187, incl.	0.018	0.010

[a] Measured 3/8 in. or more from any edge.
[b] Buffing for removal of light surface imperfections shall be permitted. The depth of such buffed areas shall not exceed the permissible minus variation.
[c] Applicable to material 48 in. and under in width.

Permissible Variations in Thickness

15. (*a*) The material covered by this specification shall be assumed to weigh 0.334 lb per cu in.

(*b*) *Plate.*—The permissible variations in thickness of plate shall be as prescribed in Table III.

(*c*) *Sheet.*—The permissible variations in thickness of sheet shall be as prescribed in Table IV. The thickness of sheet shall be measured with the micrometer spindle 3/8 in. or more from any edge for material 1 in. or over in width and at any place on material under 1 in. in width.

Permissible Variations in Width

16. (*a*) *Plate.*—The permissible variations in width of rectangular plates shall be as prescribed in Table V.

(*b*) *Sheet.*—The permissible variations in width for sheet shall not exceed 1/8 in. over the width ordered, with a 0 minus tolerance.

Permissible Variations in Length

17. (*a*) Sheet may be ordered to cut lengths, in which case a variation of 1/8 in. over the specified length shall be permitted, with a 0 minus tolerance.

(*b*) Permissible variations in the length of rectangular plate shall be as prescribed in Table V.

TABLE V.—PERMISSIBLE VARIATIONS IN WIDTH AND LENGTH OF SHEARED OR ABRASIVE CUT RECTANGULAR PLATE.

Specified Thickness, in.	Permissible Variations, in.			
	Width		Length	
	Plus	Minus	Plus	Minus
3/16 to 1 1/2, incl.	1/8	0	1/8	0
Over 1 1/2 to 2 1/2, incl.	1/4	0	1/4	0

Straightness

18. The edgewise curvature (depth of chord) of sheet and plate shall not exceed 0.05 in. multiplied by the length in feet.

Edges

19. When no description of any required form of edge is given, it shall be understood that edges such as would result from shearing or abrasive cutting will be acceptable.

Squareness (Sheet)

20. For sheets of all thicknesses and widths of 6 in. or more, the angle between adjacent sides shall be 90 ± 0.15 deg (1/16 in. in 24 in.).

Flatness

21. Hot-finished, annealed, and descaled sheet shall be commercially flat.

Special Requirements

22. (*a*) Special tolerances other than those specified herein shall be as agreed upon by the manufacturer and the purchaser.

(*b*) Special analyses, test procedures, mechanical properties, and quality requirements not covered by this specification shall be as agreed upon by the manufacturer and the purchaser.

(*c*) When material is intended for nuclear applications and other critical end uses, the manufacturer shall be notified at the time of placement of the inquiry or order to determine if material of quality and inspection procedures normally employed for commercial material to this specification are adequate. In the event that more critical quality or more rigid inspection standards are indicated, the manufacturer and the purchaser shall agree upon such standards prior to production.

Workmanship and Finish

23. The material shall be uniform in quality and condition, smooth, commercially straight or flat, and free from injurious defects.

Marking

24. Unless otherwise specified, each bundle or shipping container shall be marked with the name of the material, this specification number, the size, gross, tare and net weight, consignor and consignee address, contract or order number, or such other information as may be defined in the contract or order.

Certification and Inspection

25. (*a*) Unless otherwise agreed upon between the manufacturer and purchaser, certification shall be based on one of the options described in Paragraphs (*b*) and (*c*). The option desired shall be specified on the individual purchase order (Section 2 (*d*)). In the event that neither of the above options is specified, the basis for acceptance or rejection shall be based on the provisions described in Paragraph (*b*).

(*b*) *Certificate of Compliance.*—The Certificate of Compliance shall consist of the results of the chemical (ladle) analyses of each heat in the shipment and a statement to the effect that material complies with requirements of the specification, based on available production data. No mechanical properties will be furnished on such certificates.

NOTE 5.—In the event results of both chemical analyses and mechanical property tests are desired see Section 25 (*c*).

(*c*) *Test Reports.*—Test Reports shall consist of a statement to the effect that material complies with the requirements of the specification and the manufacturer shall also include in the test report the results of chemical (ladle) analyses of each heat and the results of mechanical property tests for each lot of materials furnished.

NOTE 6.—Where material is intended for ASME Boiler and Pressure Vessel Code or other code requirements, it shall be the responsibility of the purchaser to determine whether a Certificate of Compliance (Section 25 (*b*)) will be acceptable to the responsible inspector or code authority or whether, in such instances a Test Report (Section 25 (*c*)) will be required.

(*d*) *Samples for Check Analysis.*—When, in addition to the above options on certification, the purchaser desires to make check analyses, sufficient additional material shall be ordered to provide samples for such check analyses. Analyses shall be made in the purchaser's laboratory or elsewhere at the expense of the purchaser.

(*e*) *Purchaser's Inspection at Place of Manufacture.*—When specified on the purchase order, inspection by the purchaser's representative may be made at the place of manufacture prior to shipment. In such cases, the purchaser or his representative shall state which tests he desires to witness. The manufacturer shall give the purchaser ample notice in writing as to when tests shall be conducted so that the purchaser's representative may witness any tests (excluding check analyses) that he may desire. Unless otherwise agreed upon, if the purchaser's representative does not present himself at the manufacturer's plant within 14 days after the notified date set for testing, the manufacturer shall consider mill inspection as having been waived, shall proceed with his own testing, and shall furnish the purchaser with a Certificate of Compliance or a Test Report (Section 25 (*b*) and (*c*)), whichever has been agreed upon between the inspector and the manufacturer.

The manufacturer shall afford the inspector representing the purchaser all reasonable facilities to satisfy him that the material is being furnished in accordance with this specification. Where such plant inspection may involve unusual handling such as unpacking and repacking, retesting and reinspection and other unusual operations resulting in undue loss of time and production, the manufacturer shall so notify the purchaser.

Rejection

26. Material not conforming to this specification or to authorized modifications thereof shall be subject to rejection.

Rehearing

27. Samples tested in accordance with this specification that represent rejected material shall be preserved for not less than three weeks from the date of the test report. In case of dissatisfaction with the results of the tests, the manufacturer may make claim for a rehearing within that time.

wise specified, one tension test shall be made on each lot of material as defined in Section 7.

(*b*) *Hardness Tests.*—Unless otherwise specified, hardness tests need not be made where hardness requirements are designated to be "for information only."

Methods of Test and Chemical Analysis

14. (*a*) The chemical composition and mechanical properties of the material as enumerated in this specification shall be determined, in case of disagreement, in accordance with the following methods of the American Society for Testing Materials:

Test	ASTM Designation[a]
Chemical Analysis	[b]
Tension	E 8
Rockwell Hardness	E 18
Hardness Conversion	E 140
Grain Size	E 112
Rounding-off Procedure	E 29
Method of Sampling	E 55

[a] These designations refer to the following methods of testing:
E 8, Methods of Tension Testing of Metallic Materials,
E 18, Methods of Test for Rockwell Hardness and Rockwell Superficial Hardness of Metallic Materials,
E 140, Hardness Conversion Tables for Metals (Relationship Between Brinell Hardness, Diamond Pyramid Hardness, Rockwell Hardness, and Rockwell Superficial Hardness),
E 112, Methods for Estimating the Average Grain Size of Metals,
E 29, Recommended Practices for Designating Significant Places in Specified Limiting Values, and
E 55, Method of Sampling Wrought Non-Ferrous Metals and Alloys for Determination of Chemical Composition.

[b] There are no generally accepted referee methods for chemical analysis of nickel-molybdenum alloys.

TABLE III.—PERMISSIBLE VARIATIONS IN THICKNESS OF PLATE.[d]

Specified Thickness, in.	Permissible Variations in Thickness, in.[a]	
	Plus	Minus[b]
3/16 to 7/32, incl.	0.021	0.010
Over 7/32 to 1/4, incl.	0.024	0.010
Over 1/4 to 3/8, incl.	0.027	0.010
Over 3/8 to 1/2, incl.	0.030	0.010
Over 1/2 to 5/8, incl.	0.035	0.010
Over 5/8 to 3/4, incl.	0.040	0.010
Over 3/4 to 7/8, incl.	0.045	0.010
Over 7/8 to 1, incl.	0.050	0.010
Over 1 to 2 1/2, incl.	5[c]	0.010

[a] Measured 3/8 in. or more from any edge.
[b] Buffing or grinding for removal of light surface imperfections shall be permitted. The depth of such buffed or ground areas shall not exceed 0.010 in. under nominal thickness.
[c] Expressed as per cent of thickness.
[d] Applicable to material 48 in. and under in width.

(*b*) For purposes of determining compliance with the specified limits for requirements of the properties listed in the following table, an observed value or a calculated value shall be rounded off as indicated below, in accordance with the rounding-off method of the Recommended Practices for Designating Significant Places in Specified Limiting Values (ASTM Designation: E 29).

Test	Rounded-off Unit for Observed or Calculated Value
Chemical composition, hardness, and tolerances (when expressed in decimals)	nearest unit in the last right-hand place of figures of the specified limit.
Tensile strength, yield strength	nearest 1000 psi.
Elongation	nearest 1 per cent
Grain size:	
0.060 mm (0.0024 in.) or larger	nearest multiple of 0.005 mm (0.0002 in.)
less than 0.060 mm (0.0024 in.)	nearest multiple of 0.002 mm (0.0001 in.)

(*c*) In lieu of the offset method, the minimum yield strength may be determined as the stress required to produce the elongation under load as calculated by the following formula:

$$X = \left(\frac{Y}{Z} + 0.002\right) \times \text{gage length in inches}$$

where:

X = limiting extension under load in inches,
Y = specified yield strength at 0.2 per cent offset, from Table I, and
Z = modulus of elasticity (26,000,000 psi).

In case of dispute the offset method shall be used as the referee procedure.

(*d*) The measurement of grain size may be carried out by the planimetric method, the comparison method or the intercept method described in Methods E 112. However, in case of disagreement the "referee" method for determining grain size shall be the planimetric method.

TABLE IV.—PERMISSIBLE VARIATIONS IN THICKNESS OF SHEET.[c]

Specified Thickness, in.	Permissible Variations in Thickness,[a] in. (All Widths)	
	Plus	Minus[b]
0.025 to 0.034, incl.	0.004	0.004
Over 0.034 to 0.056, incl.	0.005	0.005
Over 0.056 to 0.070, incl.	0.006	0.006
Over 0.070 to 0.078, incl.	0.007	0.007
Over 0.078 to 0.093, incl.	0.008	0.008
Over 0.093 to 0.109, incl.	0.009	0.009
Over 0.109 to 0.125, incl.	0.010	0.010
Over 0.125 to 0.140, incl.	0.013	0.010
Over 0.140 to 0.171, incl.	0.016	0.010
Over 0.171 to 0.187, incl.	0.018	0.010

[a] Measured 3/8 in. or more from any edge.
[b] Buffing for removal of light surface imperfections shall be permitted. The depth of such buffed areas shall not exceed the permissible minus variation.
[c] Applicable to material 48 in. and under in width.

Permissible Variations in Thickness

15. (*a*) The material covered by this specification shall be assumed to weigh 0.334 lb per cu in.

(*b*) *Plate.*—The permissible variations in thickness of plate shall be as prescribed in Table III.

(*c*) *Sheet.*—The permissible variations in thickness of sheet shall be as prescribed in Table IV. The thickness of sheet shall be measured with the micrometer spindle 3/8 in. or more from any edge for material 1 in. or over in width and at any place on material under 1 in. in width.

Permissible Variations in Width

16. (*a*) *Plate.*—The permissible variations in width of rectangular plates shall be as prescribed in Table V.

(*b*) *Sheet.*—The permissible variations in width for sheet shall not exceed 1/8 in. over the width ordered, with a 0 minus tolerance.

Permissible Variations in Length

17. (*a*) Sheet may be ordered to cut lengths, in which case a variation of 1/8 in. over the specified length shall be permitted, with a 0 minus tolerance.

(*b*) Permissible variations in the length of rectangular plate shall be as prescribed in Table V.

TABLE V.—PERMISSIBLE VARIATIONS IN WIDTH AND LENGTH OF SHEARED OR ABRASIVE CUT RECTANGULAR PLATE.

Specified Thickness, in.	Permissible Variations, in.			
	Width		Length	
	Plus	Minus	Plus	Minus
3/16 to 1 1/2, incl.	1/8	0	1/8	0
Over 1 1/2 to 2 1/2, incl.	1/4	0	1/4	0

Straightness

18. The edgewise curvature (depth of chord) of sheet and plate shall not exceed 0.05 in. multiplied by the length in feet.

Edges

19. When no description of any required form of edge is given, it shall be understood that edges such as would result from shearing or abrasive cutting will be acceptable.

Squareness (Sheet)

20. For sheets of all thicknesses and widths of 6 in. or more, the angle between adjacent sides shall be 90 ± 0.15 deg (1/16 in. in 24 in.).

Flatness

21. Hot-finished, annealed, and descaled sheet shall be commercially flat.

Special Requirements

22. (*a*) Special tolerances other than those specified herein shall be as agreed upon by the manufacturer and the purchaser.

(*b*) Special analyses, test procedures, mechanical properties, and quality requirements not covered by this specification shall be as agreed upon by the manufacturer and the purchaser.

(*c*) When material is intended for nuclear applications and other critical end uses, the manufacturer shall be notified at the time of placement of the inquiry or order to determine if material of quality and inspection procedures normally employed for commercial material to this specification are adequate. In the event that more critical quality or more rigid inspection standards are indicated, the manufacturer and the purchaser shall agree upon such standards prior to production.

Workmanship and Finish

23. The material shall be uniform in quality and condition, smooth, commercially straight or flat, and free from injurious defects.

Marking

24. Unless otherwise specified, each bundle or shipping container shall be marked with the name of the material, this specification number, the size, gross, tare and net weight, consignor and consignee address, contract or order number, or such other information as may be defined in the contract or order.

Certification and Inspection

25. (*a*) Unless otherwise agreed upon between the manufacturer and purchaser, certification shall be based on one of the options described in Paragraphs (*b*) and (*c*). The option desired shall be specified on the individual purchase order (Section 2 (*d*)). In the event that neither of the above options is specified, the basis for acceptance or rejection shall be based on the provisions described in Paragraph (*b*).

(*b*) *Certificate of Compliance.*—The Certificate of Compliance shall consist of the results of the chemical (ladle) analyses of each heat in the shipment and a statement to the effect that material complies with requirements of the specification, based on available production data. No mechanical properties will be furnished on such certificates.

NOTE 5.—In the event results of both chemical analyses and mechanical property tests are desired see Section 25 (*c*).

(*c*) *Test Reports.*—Test Reports shall consist of a statement to the effect that material complies with the requirements of the specification and the manufacturer shall also include in the test report the results of chemical (ladle) analyses of each heat and the results of mechanical property tests for each lot of materials furnished.

NOTE 6.—Where material is intended for ASME Boiler and Pressure Vessel Code or other code requirements, it shall be the responsibility of the purchaser to determine whether a Certificate of Compliance (Section 25 (*b*)) will be acceptable to the responsible inspector or code authority or whether, in such instances a Test Report (Section 25 (*c*)) will be required.

(*d*) *Samples for Check Analysis.*—When, in addition to the above options on certification, the purchaser desires to make check analyses, sufficient additional material shall be ordered to provide samples for such check analyses. Analyses shall be made in the purchaser's laboratory or elsewhere at the expense of the purchaser.

(*e*) *Purchaser's Inspection at Place of Manufacture.*—When specified on the purchase order, inspection by the purchaser's representative may be made at the place of manufacture prior to shipment. In such cases, the purchaser or his representative shall state which tests he desires to witness. The manufacturer shall give the purchaser ample notice in writing as to when tests shall be conducted so that the purchaser's representative may witness any tests (excluding check analyses) that he may desire. Unless otherwise agreed upon, if the purchaser's representative does not present himself at the manufacturer's plant within 14 days after the notified date set for testing, the manufacturer shall consider mill inspection as having been waived, shall proceed with his own testing, and shall furnish the purchaser with a Certificate of Compliance or a Test Report (Section 25 (*b*) and (*c*)), whichever has been agreed upon between the inspector and the manufacturer.

The manufacturer shall afford the inspector representing the purchaser all reasonable facilities to satisfy him that the material is being furnished in accordance with this specification. Where such plant inspection may involve unusual handling such as unpacking and repacking, retesting and reinspection and other unusual operations resulting in undue loss of time and production, the manufacturer shall so notify the purchaser.

Rejection

26. Material not conforming to this specification or to authorized modifications thereof shall be subject to rejection.

Rehearing

27. Samples tested in accordance with this specification that represent rejected material shall be preserved for not less than three weeks from the date of the test report. In case of dissatisfaction with the results of the tests, the manufacturer may make claim for a rehearing within that time.

APPENDIX

(*A*) *Sheet, Hot-Rolled.*—Hot-rolled, annealed, and pickled, having a surface appearance comparable with that of a commercial corrosion resistant steel with a No. 1 finish. Buffed areas will be permitted for removal of light surface imperfections (see Table IV).

(*B*) *Plate, Hot-Rolled.*—Hot-rolled, annealed, and pickled, having a surface appearance comparable with that of a commercial corrosion resistant steel with a No. 1 finish. Buffed or ground areas will be permitted for removal of light surface imperfections (see Table III).

(*C*) *Heat Treatment.*—Since the corrosion resistance of this alloy may be significantly impaired by the use of improper heat treatment, the manufacturer should be notified by the purchaser of any special heat treatment contemplated which may be significantly at variance with that used normally in mill practices. In the case of fabricated vessels, where heat treatment is to be applied during or subsequent to fabrication, it is recommended that such heat treatment be as agreed upon between the purchaser and the fabricator and, when it is deemed advisable, the manufacturer should also be consulted.

SPECIFICATION FOR NICKEL-MOLYBDENUM-CHROMIUM ALLOY PLATE AND SHEET

SB-334

(IDENTICAL WITH ASTM SPECIFICATION B 334-58T)

Scope

1. (*a*) This specification covers corrosion and heat resistant nickel-molybdenum-chromium alloy plate and sheet in the hot-rolled, annealed and descaled condition, unless otherwise agreed upon between the manufacturer and the purchaser.

(*b*) *Definitions.*—The following definitions shall apply unless otherwise agreed upon between the manufacturer and the purchaser:

Definition	Thickness, in.
Hot-rolled plate	3/16 and over
Hot-rolled sheet	0.187 and under

(*c*) It should be understood that this specification is general. Provision is made herein for material suitable for the general run of drawing, forming, stamping, bending, joining operations, and all other common methods of fabrication. Since the material may be used for purposes where the requirements of the operations are too particular to be prescribed in a general specification, it is advisable in these instances for the purchaser to submit samples or drawings to the manufacturer and secure an adjustment of processing to suit the actual operations to which the material is to be subjected.

Basis of Purchase

2. Orders for material under this specification shall include information with respect to the following:

(*a*) *Dimensions.*—Thickness (decimals of an inch, not gage number), width and length (inch or fractions of an inch).

(*b*) *Fabrication Details.*—Not mandatory, but are helpful to manufacturer:

(*1*) *Heat Treatment.*—See Appendix, Section (*C*).

(*c*) *Special Requirements.*—State nature and details of requirements (Section 22).

(*d*) *Certification and Inspection.*—State at the time the order is placed which of the following options, if any, is desired:

(*1*) Furnish *Certificate of Compliance* (includes chemical analyses and certification of compliance but does not include mechanical properties) (Section 25 (*b*)).

(*2*) Furnish *Test Reports* (includes chemical analyses and mechanical properties) (Section 25 (*c*)).

(*3*) *Samples for Check Analysis.*—Whether samples for check analysis should be furnished (Section 25 (*d*)).

(*4*) *Inspection at Place of Manufacture.*—Which tests are to be witnessed (Section 25 (*e*)).

Material

3. The material shall be of such quality that the finished product shall have the chemical composition, properties, and characteristics described in this specification.

Manufacture

4. (*a*) Plate and sheet shall be produced by hot-working, annealing, descaling, cold-working, reannealing, and polishing, or by any combination of these processes.

(*b*) Plate and sheet shall be produced to the condition, finish, and dimensions specified.

Chemical Composition

5. The material shall conform to the following requirements as to chemical composition:[a]

Chromium, per cent	14.50 to 16.50
Tungsten, per cent	3.00 to 4.50
Iron, per cent	4.00 to 7.00
Carbon, max, per cent	0.08
Silicon, max, per cent	1.00
Cobalt, max, per cent	2.50
Manganese, max, per cent	1.00
Vanadium, max, per cent	0.35
Molybdenum, per cent	15.00 to 17.00
Phosphorus, max, per cent	0.040
Sulfur, max, per cent	0.030
Nickel, per cent	remainder

[a] For the applicable rounding-off procedure, see Section 14 (*b*).

Samples for Chemical Analysis

6. (*a*) Unless otherwise agreed upon by the manufacturer and the purchaser, heat (ladle) analyses furnished by the manufacturer shall be accepted as defining the composition of the material furnished.

(*b*) If samples for check analysis are desired, they shall be so specified by the purchaser, at the time of placement of the order. Samples shall be taken from material representative of each 5000 lb, or fraction thereof, of the finished material, and shall conform to the requirements of Section 5.

(*c*) Such samples for chemical analysis shall be taken in accordance with the procedure described in the Method of Sampling Wrought Non-Ferrous Metals and Alloys for Determination of Chemical Composition (ASTM Designation: E 55). The lot size, portion size and selection of pieces shall be as follows:

Lot Size.—5,000 lb, or fraction thereof, of finished material.

Portion Size.—Pieces from four individual lengths of finished material. If the lot consists of less than four lengths, a piece shall be taken from each individual length.

Minimum Weight of Composite Sample.—150 g divided into three equal parts, one for the manufacturer, one for the purchaser, and one for an umpire, if necessary.

(*d*) Samples for check analyses, when requested after the date of placement of the order, shall be as agreed upon between the manufacturer and the purchaser.

Lots for Mechanical Testing

7. Unless otherwise specified, a lot for mechanical testing shall be defined as follows:

Plate.—A lot of plate shall consist of the products resulting from the rolling of one heat of material in the same condition and specified thickness.

Sheet.—A lot of sheet shall consist of material from one heat in the same condition, finish, and specified thickness but in no case more than 8,000 lb.

NOTE 1.—Where material cannot be identified by heat, a lot shall consist of not more than 500 lb of material in the same thickness and condition, except that for plates weighing over 500 lb only one specimen shall be taken.

Sampling for Mechanical Tests

8. (*a*) Samples of the material to provide test specimens for mechanical tests shall be taken from such locations in each lot as to be representative of that lot.

(*b*) When samples are to be taken after delivery, the purchaser of material ordered to cut lengths may arrange with the manufacturer to have an excess length furnished or request on the order additional material of adequate size to provide sample coupons for inspection purposes.

Mechanical Properties

9. The material shall conform to the requirements as to mechanical properties prescribed in Table I.

Hardness

10. Material tested in a single thickness shall conform to the Rockwell or equivalent hardness requirements prescribed in Table I with the exception that hardness values are informative only for those conditions of plate and sheet for which tensile requirements have been specified.

TABLE I.—MECHANICAL PROPERTIES[a] FOR PLATE AND SHEET.

Specified Thickness, in.	Tensile Strength, min, psi	Yield Strength[c] (0.2 per cent Offset), min, psi	Elongation in 2 in.,[d] min, per cent	Rockwell Hardness,[b] max
Hot-Rolled Annealed Plate				
3/16 to 3/4, incl	100 000	45 000	30	C 25
Over 3/4 to 2 1/2, incl	90 000	45 000	20	C 25
Hot-Rolled Annealed Sheet				
All	115 000	50 000	40	C 24

[a] For applicable rounding-off procedures, see Section 14(*b*).

[b] Hardness values are shown for information purposes only, and are not to be used as the basis of acceptance or rejection. For approximate hardness conversions, see ASTM Hardness Conversion Tables E 140.

[c] The yield strength shall be determined by the offset method using a crosshead speed of approximately 0.05 in. per min, until the yield strength has been exceeded, after which the speed may be increased to not more than 0.50 in. per min to fracture for determining the tensile strength. See Section 14(*c*).

[d] Elongation measured in a gage length of 4× diameter for machined round test specimens, in accordance with Section 12(*b*).

NOTE 2.—For hardness conversions, see the Hardness Conversion Tables for Metals (Relationship Between Brinell Hardness, Diamond Pyramid Hardness, Rockwell Hardness, and Rockwell Superficial Hardness) (ASTM Designation: E 140).

NOTE 3.—Caution should be observed in using the Rockwell test on thin material, as the results may be affected by the specimen thickness. For thicknesses under 0.050 in. the use of the Rockwell superficial or the Vickers hardness test is suggested.

Grain Size for Sheet

11. Sheet shall conform to the grain sizes as illustrated in Plate I of the Methods for Determining the Average Grain Size of Metals (ASTM Designation: E 112). The requirements shall be as indicated in Table II.

TABLE II.—GRAIN SIZE[a] FOR HOT-ROLLED ANNEALED SHEET.

Thickness, in.	Calculated Diameter of Average Grain Section, max		Corresponding ASTM Micro-Grain Size No.
	mm	in.	
0.125 and under	0.120	0.0047	3.0
Over 0.125	0.210	0.0083	1.5

[a] For applicable rounding-off procedures, see Section 14(*b*).

Test Specimens

12. (*a*) Tension test specimens from material 1/2 in. and under in thickness shall be of the full thickness of the material, and shall be machined to the form and dimensions shown in Fig. 7 of the Methods of Tension Testing of Metallic Materials (ASTM Designation: E 8).

(*b*) Tension test specimens from material over 1/2 in. in thickness may be of the full thickness of the material, or machined to the form and dimensions shown in Fig. 8 of Methods E 8. In case of dispute, the referee method shall be to prepare the specimens by machining to the form and dimensions shown in Fig. 8 of Methods E 8.

NOTE 4.—The following sample preparation is recommended for nickel-molybdenum-chromium alloys: For full thickness specimens a box fixture is used to hold the samples while they are ground to overall size. This fixture consists of a rectangular frame mounted on a rectangular base held together by set screws. Samples are placed on edge in the fixture with sufficient back strips to fill the box. These are locked in place with set screws through the side of the top rectangle. The strips are tapped down flush with the bottom before locking. The edges are then surfaced on a cylindrical grinder until they are even. The top part of the fixture is inverted and the process repeated except that the samples are surfaced to the finished width.

To rough out the reduced test section, the strips are clamped in "C" clamps, tapped flush, and the complete assembly held with a grinding vise on a grinding table. Grinding is done perpendicular to the longitudinal axis of the strip with a wheel at least as fine as 38 grit. Enough stock is left to finish by grinding parallel to the longitudinal axis. All cross grind marks are removed.

The entire edge is polished with an emery (approximately 90 grit) covered buffing wheel. The sharp edges of the specimen are slightly rounded using a 120 grit seamless belt on a belt surface. The test section of round specimens should be finished ground and if necessary polished to remove grind marks.

(*c*) Tension test specimens from plate and sheet shall be taken transverse to the direction of rolling when width will permit.

Number of Tests

13. (*a*) *Tension Tests.*—Unless otherwise specified, one tension test shall be made on each lot of material as defined in Section 7.

(*b*) *Hardness Tests.*—Unless otherwise specified, hardness tests need not be made where hardness requirements are designated to be "for information only."

Methods of Test and Chemical Analysis

14. (*a*) The chemical compositions and mechanical properties of the material as enumerated in this specification shall be determined, in case of disagreement, in accordance with the following methods of the American Society for Testing Materials:

Test	ASTM Designation[a]
Chemical Analysis	[b]
Tension	E 8
Rockwell Hardness	E 18
Hardness Conversion	E 140
Grain Size	E 112
Rounding-off Procedure	E 29
Method of Sampling	E 55

[a] These designations refer to the following methods of testing:
E 8, Methods of Tension Testing of Metallic Materials,
E 18, Methods of Test for Rockwell Hardness and Rockwell Superficial Hardness of Metallic Materials,
E 140, Hardness Conversion Tables for Metals (Relationship Between Brinell Hardness, Diamond Pyramid Hardness, Rockwell Hardness, and Rockwell Superficial Hardness),
E 112, Methods for Estimating the Average Grain Size of Metals,
E 29, Recommended Practices for Designating Significant Places in Specified Limiting Values, and
E 55, Method of Sampling Wrought Non-Ferrous Metals and Alloys for Determination of Chemical Composition.

[b] There are no generally accepted referee methods for chemical analysis of nickel-molybdenum-chromium alloys.

(*b*) For purposes of determining compliance with the specified limits for requirements of the properties listed in the following table, an observed value or a calculated value shall be rounded off as indicated below, in accordance with the rounding-off method of the Recommended Practices for Designating Significant Places in Specified Limiting Values (ASTM Designation: E 29).

Test	Rounded-off Unit for Observed or Calculated Value
Chemical composition, hardness, and tolerances (when expressed in decimals)	nearest unit in the last right-hand place of figures of the specified limit.
Tensile strength, yield strength	nearest 1000 psi.
Elongation	nearest 1 per cent
Grain size: 0.060 mm (0.0024 in.) or larger	nearest multiple of 0.005 mm (0.0002 in.)
less than 0.060 mm (0.0024 in.)	nearest multiple of 0.002 mm (0.0001 in.).

(*c*) In lieu of the offset method, the minimum yield strength may be determined as the stress required to produce the elongation under load as calculated by the following formula:

$$X = \left(\frac{Y}{Z} + 0.002\right) \times \text{gage length in inches}$$

where:

X = limiting extension under load in inches,
Y = specified yield strength at 0.2 per cent offset, from Table I, and
Z = modulus of elasticity (26,000,000 psi.)

In case of dispute the offset method shall be used as the referee procedure.

(*d*) The measurement of grain size may be carried out by the planimetric method, the comparison method or the intercept method described in Methods E 112. However, in case of disagreement the "referee" method for determining grain size shall be the planimetric method.

TABLE III.—PERMISSIBLE VARIATIONS IN THICKNESS OF PLATE.[d]

Specified Thickness, in.	Permissible Variations in Thickness, in.[a] Plus	Minus[b]
3/16 to 7/32, incl	0.021	0.010
Over 7/32 to 1/4, incl	0.024	0.010
Over 1/4 to 3/8, incl	0.027	0.010
Over 3/8 to 1/2, incl	0.030	0.010
Over 1/2 to 5/8, incl	0.035	0.010
Over 5/8 to 3/4, incl	0.040	0.010
Over 3/4 to 7/8, incl	0.045	0.010
Over 7/8 to 1, incl	0.050	0.010
Over 1 to 2 1/2, incl	5[c]	0.010

[a] Measured 3/8 in. or more from any edge.

[b] Buffing or grinding for removal of light surface imperfections shall be permitted. The depth of such buffed or ground areas shall not exceed 0.010 in. under nominal thickness.

[c] Expressed as per cent of thickness.

[d] Applicable to material 48 in. and under in width.

TABLE IV.—PERMISSIBLE VARIATIONS IN THICKNESS OF SHEET.[c]

Specified Thickness, in.	Permissible Variations in Thickness,[a] in. (All Widths) Plus	Minus[b]
0.025 to 0.034, incl	0.004	0.004
Over 0.034 to 0.056, incl	0.005	0.005
Over 0.056 to 0.070, incl	0.006	0.006
Over 0.070 to 0.078, incl	0.007	0.007
Over 0.078 to 0.093, incl	0.008	0.008
Over 0.093 to 0.109, incl	0.009	0.009
Over 0.109 to 0.125, incl	0.010	0.010
Over 0.125 to 0.140, incl	0.013	0.010
Over 0.140 to 0.171, incl	0.016	0.010
Over 0.171 to 0.187, incl	0.018	0.010

[a] Measured 3/8 in. or more from any edge.

[b] Buffing for removal of light surface imperfections shall be permitted. The depth of such buffed areas shall not exceed the permissible minus variation.

[c] Applicable to material 48 in. and under in width.

Permissible Variations in Thickness

15. (*a*) The material covered by this specification shall be assumed to weigh 0.323 lb per cu in.

(*b*) *Plate.*—The permissible variations in thickness of plate shall be as prescribed in Table III.

(*c*) *Sheet.*—The permissible variations in thickness of sheet shall be as prescribed in Table IV. The thickness of sheet shall be measured with the micrometer spindle 3/8 in. or more from any edge for material 1 in. or over in width and at any place on material under 1 in. in width.

Permissible Variations in Width

16. (*a*) *Plate.*—The permissible variations in width of rectangular plates shall be as prescribed in Table V.

(*b*) *Sheet.*—The permissible variations in width for sheet shall not exceed 1/8 in. over the width ordered, with a 0 minus tolerance.

Permissible Variations in Length

17. (*a*) Sheet may be ordered to cut lengths, in which case a variation of 1/8 in. over the specified length shall be permitted, with a 0 minus tolerance.

(*b*) Permissible variations in the

TABLE V.—PERMISSIBLE VARIATIONS IN WIDTH AND LENGTH OF SHEARED OR ABRASIVE CUT RECTANGULAR PLATE.

Specified Thickness, in.	Permissible Variations, in. Width Plus	Width Minus	Length Plus	Length Minus
3/16 to 1 1/2, incl	1/8	0	1/8	0
Over 1 1/2 to 2 1/2, incl	1/4	0	1/4	0

length of rectangular plate shall be as prescribed in Table V.

Straightness

18. The edgewise curvature (depth of chord) of sheet and plate shall not exceed 0.05 in. multiplied by the length in feet.

Edges

19. When no description of any required form of edge is given, it shall be understood that edges such as would result from shearing or abrasive cutting will be acceptable.

Squareness (Sheet)

20. For sheets of all thicknesses and widths of 6 in. or more, the angle between adjacent sides shall be 90 ± 0.15 deg ($\frac{1}{16}$ in. in 24 in.).

Flatness

21. Hot-finished, annealed, and pickled sheet shall be commercially flat.

Special Requirements

22. (*a*) Special tolerances other than those specified herein shall be as agreed upon by the manufacturer and the purchaser.

(*b*) Special analyses, test procedures, mechanical properties, and quality requirements not covered by this specification shall be as agreed upon by the manufacturer and the purchaser.

(*c*) When material is intended for nuclear applications and other critical end uses, the manufacturer shall be notified at the time of placement of the inquiry or order to determine if material of quality and inspection procedures normally employed for commercial material to this specification are adequate. In the event that more critical quality or more rigid inspection standards are indicated, the manufacturer and the purchaser shall agree upon such standards prior to production.

Workmanship and Finish

23. The material shall be uniform in quality and condition, smooth, commercially straight or flat, and free from injurious defects.

Marking

24. Unless otherwise specified, each bundle or shipping container shall be marked with the name of the material, this specification number, the size, gross, tare and net weight, consignor and consignee address, contract or order number, or such other information as may be defined in the contract or order.

Certification and Inspection

25. (*a*) Unless otherwise agreed upon between the manufacturer and purchaser, certification shall be based on one of the options described in Paragraphs (*b*) and (*c*). The option desired shall be specified on the individual purchase order (Section 2 (*d*)). In the event that neither of the above options is specified, the basis for acceptance or rejection shall be based on the provisions described in Paragraph (*b*).

(*b*) *Certificate of Compliance.*—The Certificate of Compliance shall consist of the results of the chemical (ladle) analyses of each heat in the shipment and a statement to the effect that material complies with requirements of the specification, based on available production data. No mechanical properties will be furnished on such certificates.

NOTE 5.—In the event results of both chemical analyses and mechanical property tests are desired see Section 25 (*c*).

(*c*) *Test Reports.*—Test Reports shall consist of a statement to the effect that material complies with the requirements of the specification and the manufacturer shall also include in the test report the results of chemical (ladle) analyses of each heat and the results of mechanical property tests for each lot of materials furnished.

NOTE 6.—Where material is intended for ASME Boiler and Pressure Vessel Code or other code requirements, it shall be the responsibility of the purchaser to determine whether a Certificate of Compliance (Section 25 (*b*)) will be acceptable to the responsible inspector or code authority or whether, in such instances a Test Report (Section 25 (*c*)) will be required.

(*d*) *Samples for Check Analysis.*—When, in addition to the above options on certification, the purchaser desires to make check analyses, sufficient additional material shall be ordered to provide samples for such check analyses. Analyses shall be made in the purchaser's laboratory or elsewhere at the expense of the purchaser.

(*e*) *Purchaser's Inspection at Place of Manufacture.*—When specified on the purchase order, inspection by the purchaser's representative may be made at the place of manufacture prior to shipment. In such cases, the purchaser or his representative shall state which tests he desires to witness. The manufacturer shall give the purchaser ample notice in writing as to when tests shall be conducted so that the purchaser's representative may witness any tests (excluding check analyses) that he may desire. Unless otherwise agreed upon, if the purchaser's representative does not present himself at the manufacturer's plant within 14 days after the notified date set for testing, the manufacturer shall consider mill inspection as having been waived, shall proceed with his own testing, and shall furnish the purchaser with a certificate of compliance or a test report (Section 25 (*b*) and (*c*)), whichever has been agreed upon between the inspector and the manufacturer.

The manufacturer shall afford the inspector representing the purchaser all reasonable facilities to satisfy him that the material is being furnished in accordance with this specification. Where such plant inspection may involve unusual handling, such as unpacking and repacking, retesting and reinspection and other unusual operations resulting in undue loss of time and production, the manufacturer shall so notify the purchaser.

Rejection

26. Material not conforming to this specification or to authorized modifications thereof shall be subject to rejection.

Rehearing

27. Samples tested in accordance with this specification that represent rejected material shall be preserved for not less than three weeks from the date of the test report. In case of dissatisfaction with the results of the tests, the manufacturer may make claim for a rehearing within that time.

APPENDIX

(*A*) *Sheet, Hot-Rolled.*—Hot-rolled, annealed, and pickled, having a surface appearance comparable with that of a commercial corrosion resistant steel with a No. 1 finish. Buffed areas will be permitted for removal of light surface imperfections (see Table IV).

(*B*) *Plate, Hot-Rolled.*—Hot-rolled, annealed, and pickled, having a surface appearance comparable with that of a commercial corrosion resistant steel with a No. 1 finish. Buffed or ground areas will be permitted for removal of light surface imperfections (see Table III).

(*C*) *Heat Treatment.*—Since the corrosion resistance of this alloy may be significantly impaired by the use of improper heat treatment, the manufacturer should be notified by the purchaser of any special heat treatment contemplated which may be significantly at variance with that used normally in mill practices. In the case of fabricated vessels, where heat treatment is to be applied during or subsequent to fabrication, it is recommended that such heat treatment be as agreed upon between the purchaser and the fabricator and, when it is deemed advisable, the manufacturer should also be consulted.

SPECIFICATION FOR NICKEL-MOLYBDENUM ALLOY ROD

SB-335

(IDENTICAL WITH ASTM SPECIFICATION B 335-58T)

Scope

1. (*a*) This specification covers corrosion-resistant nickel-molybdenum rod in two conditions:

Hot-Finished, Annealed, and Descaled, $\frac{5}{16}$ to $\frac{3}{4}$ in. excl, in diameter, and

Hot-Finished, Annealed, and Ground or Turned, $\frac{3}{4}$ to $3\frac{1}{2}$ in. incl, in diameter.

(*b*) *Definition.*—The term rod as used in this specification includes material of round solid section furnished in straight lengths.

(*c*) It should be understood that this specification is general. Provision is made herein for material suitable for hot- and cold-working operations, machining, and all other common methods of fabrication. Since the material may be used for purposes where the requirements of the operations are too particular to be prescribed in the general specification, it is advisable in these instances for the purchaser to submit samples or detailed information to the manufacturer and secure an adjustment of processing to suit the actual conditions for which the material is intended (see Section 16).

Basis of Purchase

2. Orders for material under this specification shall include information with respect to the following (See Appendix):

(*a*) *Dimensions.*—Nominal diameter and length. The purchaser shall specify the shortest usable multiple length (Section 14, Tables II and III).

(*b*) *Special Requirements.*—State nature and details of requirements (Section 16).

(*c*) *Certification and Inspection.*—State at the time the order is placed which of the following options, if any, is desired:

(*1*) Furnish *Certificate of Compliance* (includes chemical analyses and certification of compliance but does not include mechanical properties) (Section 19(*b*)).

(*2*) Furnish *Test Reports* (includes chemical analyses and mechanical properties) (Section 19(*c*)).

(*3*) *Samples for Check Analysis.*—Whether samples for check analysis shall be furnished (Section 19(*d*)).

(*4*) *Inspection at Place of Manufacture.*—Which tests are to be witnessed (Section 19(*e*)).

(*d*) *Heat Treatment.*—See Appendix, Section (*3*).

Material

3. The material shall be of such quality that the finished product shall have the chemical composition, properties, and characteristics described in this specification.

Manufacture

4. (*a*) Rod shall be produced by hot working, annealing, descaling, cold-working, turning, grinding, reannealing, or by any combination of these processes.

(*b*) Rod shall be produced to the condition, finish, and dimensions specified.

Chemical Composition

5. The materials shall conform to the following requirements as to chemical composition:[a]

Chromium, max, per cent	1.00
Iron, per cent	4.00 to 6.00
Carbon, max, per cent	0.05
Silicon, max, per cent	1.00
Cobalt, max, per cent	2.50
Manganese, max, per cent	1.00
Vanadium, per cent	0.20 to 0.40
Molybdenum, per cent	26.00 to 30.00
Phosphorus, max, per cent	0.025
Sulfur, max, per cent	0.030
Nickel, per cent	remainder

[a] For applicable rounding-off procedures, see Section 13(*b*).

Samples for Chemical Analysis

6. (*a*) Unless otherwise agreed upon by the manufacturer and the purchaser, heat (ladle) analyses furnished by the manufacturer shall be accepted as defining the composition of the material furnished.

(*b*) If samples for check analysis are desired, they shall be so specified by the purchaser, at the time of placement of the order. Samples shall be taken from material representative of each 5,000 lb, or fraction thereof, of the finished material, and shall conform to the requirements of Section 5.

(*c*) Such samples for chemical analysis shall be taken in accordance with the procedure described in the Method of Sampling Wrought Non-Ferrous Metals and Alloys for Determination of Chemical Composition (ASTM Designation: E 55). The lot size, portion size and selection of pieces shall be as follows:

Lot Size.—5,000 lb, or fraction thereof, of finished material.

Portion Size.—Pieces from four individual lengths of finished material. If the lot consists of less than four lengths, a piece shall be taken from each individual length.

Minimum Weight of Composite Sample.—150 g divided into three equal parts, one for the manufacturer, one for the purchaser, and one for an umpire, if necessary.

(*d*) Samples for check analyses, when requested after the date of placement of the order, shall be as agreed upon between the manufacturer and the purchaser.

Lots for Mechanical Testing

7. Unless otherwise specified, a lot shall consist of material from one heat of the same condition, finish, and cross-section in a shipment, and in no case more than 8,000 lb in weight.

NOTE 1.—Where material cannot be identified by heat, a lot shall consist of not more than 500 lb of material in the same size and condition.

Sampling for Mechanical Tests

8. (*a*) Samples of the material to provide test specimens for mechanical tests shall be taken from such locations in each lot as to be representative of that lot.

(*b*) When samples are to be taken after delivery, the purchaser of material ordered to cut lengths may arrange with the manufacturer to have an excess length furnished or request on the order additional material of adequate size to provide sample coupons for inspection purposes.

Mechanical Properties

9. The material shall conform to the requirements as to mechanical properties prescribed in Table I.

Hardness

10. There are no hardness requirements for this material. Where hardness values are desirable, the values and the method of testing shall be as agreed upon between the manufacturer and the purchaser.

TABLE I.—MECHANICAL PROPERTIES[a] FOR RODS.

Specified Diameter, in.	Tensile Strength, min, psi	Yield Strength[b] (0.2 per cent Offset), min, psi	Elongation in 2 in.,[c] min per cent
$\frac{5}{16}$ to $1\frac{1}{2}$, incl	115 000	46 000	35
Over $1\frac{1}{2}$ to $3\frac{1}{2}$, incl	100 000	46 000	30

[a] For the applicable rounding-off procedure, see Section 13(*b*).

[b] The yield strength shall be determined by the offset method using a crosshead speed of approximately 0.05 in. per min until the yield strength has been exceeded, after which the speed may be increased to not more than 0.50 in. per min to fracture for determining the tensile strength. See Section 13(*c*).

[c] Elongation measured in a gage length of 4× diameter for machined round test specimens, in accordance with Section 11(*b*).

Test Specimens

11. (*a*) Tension test specimens shall be taken from finished material and tested in the direction of fabrication.

(*b*) All rod shall be tested in full size when practicable. When a machined specimen becomes necessary, it shall be prepared to the form and dimensions of the test specimen shown in Fig. 8 of the Methods of Tension Testing of Metallic Materials (ASTM Designation: E 8).

(*c*) For material $1\frac{1}{2}$ in. and under in diameter, the axis of the test specimen shall coincide with the central axis of the piece. For material over $1\frac{1}{2}$ in. in diameter, the axis shall be located midway between the center and surface of the piece.

(*d*) The test section of specimens shall be ground and, if necessary, polished to remove grind marks.

Number of Tests

12. Unless otherwise specified, one tension test shall be made on each lot, as defined in Section 7.

Methods of Testing and Chemical Analysis

13. (*a*) The chemical compositions and mechanical properties of the materials as enumerated in this specification shall be determined in case of disagreement, in accordance with the following methods of the American Society for Testing Materials:

Test	ASTM Designation[a]
Chemical Analysis	[b]
Tension	E 8
Brinell Hardness	E 10
Rockwell Hardness	E 18
Hardness Conversion	E 140
Rounding-off Procedure	E 29
Method of Sampling	E 55

[a] These designations refer to the following methods of testing:

E 8, Methods of Tension Testing of Metallic Materials,

E 10, Methods of Test for Brinell Hardness Metallic Materials,

E 18, Methods of Test for Rockwell Hardness and Rockwell Superficial Hardness of Metallic Materials,

E 140, Hardness Conversion Tables for Metals (Relationship between Brinell Hardness, Diamond Pyramid Hardness, Rockwell Hardness, and Rockwell Superficial Hardness),

E 29, Recommended Practices for Designating Significant Places in Specified Limits, and

E 55, Method of Sampling Wrought Non-Ferrous Metals and Alloys for Determination of Chemical Composition.

[b] There are no generally accepted referee methods for chemical analysis of nickel-molybdenum alloys.

(*b*) For purposes of determining compliance with the specified limits for requirements of the properties listed in the following table, an observed value or a calculated value shall be rounded off as indicated below, in accordance with the rounding-off method of Recommended Practices E 29.

Test	Rounded-off Unit for Observed or Calculated Value
Chemical composition, hardness, and tolerances (when expressed in decimals)	nearest unit in the last right-hand place of figures of the specified limit.
Tensile strength, yield strength	nearest 1000 psi.
Elongation	nearest 1 per cent.

(*c*) In lieu of the offset method the minimum yield strength may be determined as the stress required to produce the elongation under load as calculated by the following formula:

$$X = \left(\frac{Y}{Z} + 0.002\right) \times \text{gage length in inches}$$

where:

X = the limiting extension under load, inches,

Y = specified yield strength at 0.2 per cent offset, from Table I, and

Z = modulus of elasticity (26,000,000 psi).

In case of dispute the offset method shall be used as the referee procedure.

Permissible Variations in Dimensions

14. (*a*) *Diameter.*—The permissible variations from the specified diameter and out-of-roundness shall be as prescribed in Table II.

(*b*) *Machining Allowances.*—When the surfaces of hot-finished material are to be machined the following allowances are recommended for normal machining operations:

Hot-Finished Rounds (Annealed and Descaled).—For diameters of $\frac{5}{16}$ to $\frac{11}{16}$ in., incl, an allowance of $\frac{1}{16}$ in. on the diame-

TABLE II.—PERMISSIBLE VARIATIONS IN DIAMETER, OUT-OF-ROUNDNESS, AND CUT LENGTHS OF HOT-FINISHED RODS.

Specified Diameter, in.	Permissible Variations, in.				
	Diameter[b]		Out-of-Roundness, max	Cut Length[a]	
	Plus	Minus		Plus	Minus
Hot-Finished, Annealed, and Descaled Rods					
5/16 to 7/16, incl.	0.012	0.012	0.018	1/16	0
Over 7/16 to 5/8, incl.	0.014	0.014	0.020	1/16	0
Over 5/8 to 3/4, excl.	0.016	0.016	0.024	1/16	0
Hot-Finished, Annealed, and Ground or Turned Rods					
3/4 to 2, excl.	0.010	0	0.008	1/16	0
2 to 3 1/2, incl.	0.010	0	0.008	1/8	0

[a] Applicable only to rods ordered to "cut" lengths.
[b] For forging stock, spot grinding shall be permitted for removal of minor surface imperfections.

ter should be made for finish machining.

(*c*) *Length.*—The permissible variations in length of hot-finished rods shall be as prescribed in Table III. Unless otherwise specified, random mill lengths will be furnished. Rods ordered to random or nominal lengths will be furnished with either cropped or saw-cut ends; material ordered to cut lengths will be furnished with square saw-cut or machined ends. Where rods are ordered in multiple lengths, 1/4 in. will be allowed for each multiple cut, unless otherwise specified.

(*d*) *Weight.*—The material covered by this specification shall be assumed to weigh 0.334 lb per cu in.

Straightness

15. The permissible variations in straightness of rods as determined by depth of chord shall not exceed 1/4 in. in 10 ft, or fraction thereof.

Special Requirements

16. (*a*) Special tolerances other than those specified herein shall be as agreed upon by the manufacturer and the purchaser.

(*b*) Special variations in analysis, test procedures, tolerances, mechanical properties and quality requirements not covered by this specification shall be as agreed upon by the manufacturer and the purchaser.

(*c*) When material is intended for nuclear applications and other critical end uses, the manufacturer shall be notified at the time of placement of the inquiry or order to determine if material of quality and inspection procedures normally employed for commercial material to this specification are adequate. In the event that more critical quality or more rigid inspection standards are indicated, the manufacturer and the purchaser shall agree upon such standards prior to production.

Workmanship and Finish

17. The material shall be uniform in quality and condition, smooth, commercially straight, and free from injurious defects.

Marking

18. Unless otherwise specified, each bundle or shipping container shall be marked with the name of the material, this specification number, the size, gross, tare and net weight, consignor and consignee address, contract or order number, or such other information as may be defined in the contract or order.

Certification and Inspection

19. (*a*) Unless otherwise agreed upon between the manufacturer and the purchaser, certification shall be based on one of the options described in Paragraphs (*b*) and (*c*). The option desired shall be specified on the individual purchase order (Section 2(*c*)). In the event that neither of the above options is specified, the basis for acceptance or rejection shall be based on the provisions described in Paragraph (*b*).

(*b*) *Certificate of Compliance.*—The Certificate of Compliance shall consist of the results of the chemical (ladle) analyses of each heat in a shipment and a statement to the effect that material complies with requirements of the specification, based on available production data. No mechanical properties will be furnished on such certificates.

NOTE 2.—In the event results of both chemical analyses and mechanical property tests are desired see Section 19(*c*).

(*c*) *Test Reports.*—Test Reports shall consist of a statement to the effect that material complies with the requirements of the specification and the manufacturer shall also include in the Test Report the results of chemical (ladle) analyses of each heat and the results of mechanical property tests for each lot of materials furnished.

NOTE 3.—Where material is intended for ASME Boiler and Pressure Vessel Code or other code requirements, it shall be the responsibility of the purchaser to determine whether a Certificate of Compliance (Section 19(*b*)) will be acceptable to the responsible inspector or code authority or whether, in such instances, a Test Report (Section 19(*c*)) will be required.

(*d*) *Samples for Check Analysis.*—When, in addition to the above options on certification, the purchaser desires to make check analyses, sufficient additional material shall be ordered to provide samples for such check analyses. Analyses shall be made in the purchaser's laboratory or elsewhere at the expense of the purchaser.

(*e*) *Purchaser's Inspection at Place of Manufacture.*—When specified on the purchase order, inspection by the purchaser's representative may be made at the place of manufacture prior to shipment. In such cases, the purchaser or his representative shall state which tests he desires to witness. The manufacturer shall give the purchaser ample notice in writing as to when tests shall be conducted so that the purchaser's representative may witness any tests (excluding check analyses) that he may desire. Unless otherwise agreed, if the purchaser's representative does not present himself at the manufacturer's plant within 14 days after the notified date set for testing, the manufacturer shall consider mill inspection as having been waived, shall proceed with his own testing, and shall furnish the purchaser with a Certificate of Compliance or a Test Report (Paragraphs (*b*) and (*c*)), whichever has been agreed upon between the inspector and the manufacturer.

The manufacturer shall afford the inspector representing the purchaser all reasonable facilities to satisfy him that the material is being furnished in accordance with this specification. Where such plant inspection may involve unusual handling, such as unpacking and repacking, retesting and reinspection and other unusual operations resulting in undue loss of time and production, the manufacturer shall so notify the purchaser.

TABLE III.—PERMISSIBLE VARIATIONS IN LENGTH OF RODS.

Random mill lengths	2 to 12 ft long with not more than 25 per cent by weight under 4 ft.
Multiple lengths	Furnished in multiples of a specified unit length, within the length limits indicated above. For each multiple, an allowance of 1/4 in. will be made for cutting, unless otherwise specified. At the manufacturers' option, individual specified unit lengths may be furnished.
Nominal lengths	Specified nominal lengths having a range of not less than 2 ft, with no short lengths allowed.
Cut lengths	A specified length to which all rods will be cut with a permissible variation as shown in Table II.

Rejection

20. Material not conforming to this specification or to authorized modifications thereof shall be subject to rejection.

Rehearing

21. Samples tested in accordance with this specification that represent rejected material shall be preserved for not less than three weeks from the date of the test report. In case of dissatisfaction with the results of the tests, the manufacturer may make claim for a rehearing within that time.

APPENDIX

The various conditions and finishes in which rod is procurable are as follows:

(*1*) Rods 5/16 to 3/4 in. excl, in diameter are furnished in the hot-finished, annealed, and descaled condition.

(*2*) Rods 3/4 to 3 1/2 in. incl, in diameter are furnished in the hot-finished, annealed, and ground or turned condition.

(*3*) *Heat Treatment.*—Since the corrosion resistance of this alloy may be significantly impaired by the use of improper heat treatment, the manufacturer should be notified by the purchaser of any special heat treatment contemplated which may be significantly at variance with that used normally in mill practices. In the case of fabricated vessels, where heat treatment is to be applied during or subsequent to fabrication, it is recommended that such heat treatment be as agreed upon between the purchaser and the fabricator and, when it is deemed advisable, the manufacturer should also be consulted.

SPECIFICATION FOR NICKEL-MOLYBDENUM-CHROMIUM ALLOY ROD

SB-336

(IDENTICAL WITH ASTM SPECIFICATION B 336-58T)

Scope

1. (*a*) This specification covers corrosion and heat-resistant nickel-molybdenum-chromium alloy in two conditions:

Hot-Finished, Annealed, and Descaled, $\frac{5}{16}$ to $\frac{3}{4}$ in., excl, in diameter, and

Hot-Finished, Annealed, and Ground or Turned, $\frac{3}{4}$ to $3\frac{1}{2}$ in., incl, in diameter.

(*b*) *Definition.*—The term rod as used in this specification includes material of round solid section furnished in straight lengths.

(*c*) It should be understood that this specification is general. Provision is made herein for material suitable for hot- and cold-working operations, machining, and all other common methods of fabrication. Since the material may be used for purposes where the requirements of the operations are too particular to be prescribed in the general specification, it is advisable in these instances for the purchaser to submit samples or detailed information to the manufacturer and secure an adjustment of processing to suit the actual conditions for which the material is intended (see Section 16).

Basis of Purchase

2. Orders for material under this specification shall include information with respect to the following (See Appendix):

(*a*) *Dimensions.*—Nominal diameter and length. The purchaser shall specify the shortest usable multiple length (Section 14, Tables II and III).

(*b*) *Special Requirements.*—State nature and details of requirements (Section 16).

(*c*) *Certification and Inspection.*—State at the time the order is placed which of the following options, if any, is desired:

(*1*) Furnish *Certificate of Compliance* (includes chemical analyses and certification of compliance but does not include mechanical properties) (Section 19(*b*)).

(*2*) Furnish *Test Reports* (includes chemical analyses and mechanical properties) (Section 19(*c*)).

(*3*) *Samples for Check Analysis.*—Whether samples for check analysis shall be furnished (Section 19(*d*)).

(*4*) *Inspection at Place of Manufacture.*—Which tests are to be witnessed (Section 19(*e*)).

(*d*) *Heat Treatment.*—See Appendix, Section (*3*).

Material

3. The material shall be of such quality that the finished product shall have the chemical composition, properties and characteristics described in this specification.

Manufacture

4. (*a*) Rod shall be produced by hot working, annealing, descaling, cold working, turning, grinding, reannealing, or by any combination of these processes.

(*b*) Rod shall be produced to the condition, finish, and dimensions specified.

Chemical Composition

5. The materials shall conform to the following requirements as to chemical composition:[a]

Chromium, per cent	14.50 to 16.50
Tungsten, per cent	3.00 to 4.50
Iron, per cent	4.00 to 7.00
Carbon, max, per cent	0.08
Silicon, max, per cent	1.00
Cobalt, max, per cent	2.50
Manganese, max, per cent	1.00
Vanadium, max, per cent	0.35
Molybdenum, per cent	15.00 to 17.00
Phosphorus, max, per cent	0.040
Sulfur, max, per cent	0.030
Nickel, per cent	remainder

[a] For applicable rounding-off procedures, see Section 13(*b*).

Samples for Chemical Analysis

6. (*a*) Unless otherwise agreed upon by the manufacturer and the purchaser, heat (ladle) analyses furnished by the manufacturer shall be accepted as defining the composition of the material furnished.

(*b*) If samples for check analysis are desired, they shall be so specified by the purchaser, at the time of placement of the order. Samples shall be taken from material representative of each 5,000 lb, or fraction thereof, of the finished material, and shall conform to the requirements of Section 5.

(*c*) Such samples for chemical analysis shall be taken in accordance with the procedure described in the Method of Sampling Wrought Non-Ferrous Metals and Alloys for Determination of Chemical Composition (ASTM Designation: E 55). The lot size, portion size and selection of pieces shall be as follows:

Lot Size.—5,000 lb, or fraction thereof, of finished material.

Portion Size.—Pieces from four individual lengths of finished material. If the lot consists of less than four lengths, a piece shall be taken from each individual length.

Minimum Weight of Composite Sample.—150 g divided into three equal parts, one for the manufacturer, one for the purchaser, and one for an umpire, if necessary.

(*d*) Samples for check analyses, when requested after the date of placement of the order, shall be as agreed upon between the manufacturer and the purchaser.

Lots for Mechanical Testing

7. Unless otherwise specified, a lot shall consist of material from one heat of the same condition, finish, and cross-section in a shipment, and in no case more than 8,000 lb in weight.

NOTE 1.—Where material cannot be identified by heat, a lot shall consist of not more than 500 lb of material in the same size and condition.

Sampling for Mechanical Tests

8. (*a*) Samples of the material to provide test specimens for mechanical tests shall be taken from such locations in each lot as to be representative of that lot.

(*b*) When samples are to be taken after delivery, the purchaser of material ordered to cut lengths may arrange with the manufacturer to have an excess length furnished or request on the order additional material of adequate size to provide sample coupons for inspection purposes.

Mechanical Properties

9. The material shall conform to the requirements as to mechanical properties prescribed in Table I.

Hardness

10. There are no hardness requirements for this material. Where hardness values are desirable, the values and the method of testing shall be as agreed upon between the manufacturer and the purchaser.

TABLE I.—MECHANICAL PROPERTIES[a] FOR RODS.

Specified Diameter, in.	Tensile Strength, min, psi	Yield Strength[b] (0.2 per cent Offset), min, psi	Elongation in 2 in.,[c] min, per cent
$\frac{5}{16}$ to $1\frac{1}{2}$, incl	110 000	46 000	25
Over $1\frac{1}{2}$ to $3\frac{1}{2}$, incl	100 000	46 000	20

[a] For the applicable rounding-off procedure, see Section 13(*b*).

[b] The yield strength shall be determined by the offset method using a crosshead speed of approximately 0.05 in. per min until the yield strength has been exceeded, after which the speed may be increased to not more than 0.50 in. per min to fracture for determining the tensile strength. See Section 13(*c*).

[c] Elongation measured in a gage length of 4 × diameter for machined round test specimens, in accordance with Section 11(*b*).

Test Specimens

11. (*a*) Tension test specimens shall be taken from finished material and tested in the direction of fabrication.

(*b*) All rod shall be tested in full size when practicable. When a machined specimen becomes necessary, it shall be prepared to the form and dimensions of the test specimen shown in Fig. 8 of the Methods of Tension Testing of Metallic Materials (ASTM Designation: E 8).

(*c*) For material $1\frac{1}{2}$ in. and under in diameter, the axis of the test specimen shall coincide with the central axis of the piece. For material over $1\frac{1}{2}$ in. in diameter, the axis shall be located midway between the center and surface of the piece.

(*d*) The test section of specimens shall be ground and, if necessary, polished to remove grind marks.

Number of Tests

12. Unless otherwise specified, one tension test shall be made on each lot, as defined in Section 7.

Methods of Testing and Chemical Analysis

13. (*a*) The chemical compositions and mechanical properties of the materials as enumerated in this specification shall be determined in case of disagreement, in accordance with the following methods of the American Society for Testing Materials:

Test	ASTM Designation[a]
Chemical Analysis	[b]
Tension	E 8
Brinell Hardness	E 10
Rockwell Hardness	E 18
Hardness Conversion	E 140
Rounding-off Procedure	E 29
Method of Sampling	E 55

[a] These designations refer to the following methods of testing:

E 8, Methods of Tension Testing of Metallic Materials,

E 10, Methods of Test for Brinell Hardness Metallic Materials,

E 18, Methods of Test for Rockwell Hardness and Rockwell Superficial Hardness of Metallic Materials,

E 140, Hardness Conversion Tables for Metals (Relationship between Brinell Hardness, Diamond Pyramid Hardness, Rockwell Hardness, and Rockwell Superficial Hardness),

E 29, Recommended Practices for Designating Significant Places in Specified Limits, and

E 55, Method of Sampling Wrought Non-Ferrous Metals and Alloys for Determination of Chemical Composition.

[b] There are no generally accepted referee methods for chemical analysis of nickel-molybdenum-chromium alloys.

(*b*) For purposes of determining compliance with the specified limits for requirements of the properties listed in the following table, an observed value or a calculated value shall be rounded off as indicated below, in accordance with the rounding-off method of Recommended Practices E 29.

Test	Rounded-off Unit for Observed or Calculated Value
Chemical composition, hardness, and tolerances (when expressed in decimals)	nearest unit in the last right-hand place of figures of the specified limit.
Tensile strength, yield strength	nearest 1000 psi.
Elongation	nearest 1 per cent.

(*c*) In lieu of the offset method the minimum yield strength may be determined as the stress required to produce the elongation under load as calculated by the following formula:

$$X = \left(\frac{Y}{Z} + 0.002\right) \times \text{gage length in inches}$$

where:

X = the limiting extension under load, inches,

Y = specified yield strength at 0.2 per cent offset, from Table I, and

Z = modulus of elasticity (26,000,000 psi).

In case of dispute the offset method shall be used as the referee procedure.

Permissible Variations in Dimensions

14. (*a*) *Diameter.*—The permissible variations from the specified diameter and out-of-roundness shall be as prescribed in Table II.

(*b*) *Machining Allowances.*—When the surfaces of hot-finished material are to be machined the following allowances are recommended for normal machining operations:

Hot-Finished Rounds (Annealed and Descaled).—For diameters of $\frac{5}{16}$ to $\frac{11}{16}$ in., incl, an allowance of $\frac{1}{16}$ in. on the diameter should be made for finish machining.

(*c*) *Length.*—The permissible variations in length of hot-finished rods shall

TABLE II.—PERMISSIBLE VARIATIONS IN DIAMETER, OUT-OF-ROUNDNESS, AND CUT LENGTHS OF HOT-FINISHED RODS.

Specified Diameter, in.	Permissible Variations, in.				
	Diameter[b]		Out-of-Roundness, max	Length[a]	
	Plus	Minus		Plus	Minus
Hot-Finished, Annealed, and Descaled Rods					
5/16 to 7/16, incl	0.012	0.012	0.018	1/16	0
Over 7/16 to 5/8, incl	0.014	0.014	0.020	1/16	0
Over 5/8 to 3/4, excl	0.016	0.016	0.024	1/16	0
Hot-Finished, Annealed, and Ground or Turned Rods					
3/4 to 2, excl	0.010	0	0.008	1/16	0
2 to 3 1/2, incl	0.010	0	0.008	1/8	0

[a] Applicable only to rods ordered to "cut" lengths.
[b] For forging stock, spot grinding shall be permitted for removal of minor surface imperfections.

be as prescribed in Table III. Unless otherwise specified, random mill lengths will be furnished. Rods ordered to random or nominal lengths will be furnished with either cropped or saw-cut ends; material ordered to cut lengths will be furnished with square saw-cut or machined ends. Where rods are ordered in multiple lengths, 1/4 in. will be allowed for each multiple cut, unless otherwise specified.

(*d*) *Weight.*—The material covered by this specification shall be assumed to weigh 0.323 lb per cu in.

Straightness

15. The permissible variations in straightness of rods as determined by depth of chord shall not exceed 1/4 in. in 10 ft, or fraction thereof.

Special Requirements

16. (*a*) Special tolerances other than those specified herein shall be as agreed upon by the manufacturer and the purchaser.

(*b*) Special variations in analysis, test procedures, tolerances, mechanical properties and quality requirements not covered by this specification shall be as agreed upon by the manufacturer and the purchaser.

(*c*) When material is intended for nuclear applications and other critical end uses, the manufacturer shall be notified at the time of placement of the inquiry or order to determine if material of quality and inspection procedures normally employed for commercial material to this specification are adequate. In the event that more critical quality or more rigid inspection standards are indicated, the manufacturer and the purchaser shall agree upon such standards prior to production.

Workmanship and finish

17. The material shall be uniform in quality and condition, smooth, commercially straight, and free from injurious defects.

Marking

18. Unless otherwise specified, each bundle or shipping container shall be marked with the name of the material, this specification number, the size, gross, tare and net weight, consignor and consignee address, contract or order number, or such other information as may be defined in the contract or order.

Certification and Inspection

19. (*a*) Unless otherwise agreed upon between the manufacturer and the purchaser, certification shall be based on one of the options described in Paragraphs (*b*) and (*c*). The option desired shall be specified on the individual purchase order (Section 2(*c*)). In the event that neither of the above options is specified, the basis for acceptance or rejection shall be based on the provisions described in Paragraph (*b*).

(*b*) *Certificate of Compliance.*—The Certificate of Compliance shall consist of the results of the chemical (ladle) analyses of each heat in a shipment and a statement to the effect that material complies with requirements of the specification, based on available production data. No mechanical properties will be furnished on such certificates.

NOTE 2.—In the event results of both chemical analyses and mechanical property tests are desired see Section 19(*c*).

(*c*) *Test Reports.*—Test Reports shall consist of a statement to the effect that material complies with the requirements of the specification and the manufacturer shall also include in the Test Report the results of chemical (ladle) analyses of each heat and the results of mechanical property tests for each lot of materials furnished.

NOTE 3.—Where material is intended for ASME Boiler and Pressure Vessel Code or other code requirements, it shall be the responsibility of the purchaser to determine whether a Certificate of Compliance (Section 19(*b*)) will be acceptable to the responsible inspector or code authority or whether, in such instances, a Test Report (Section 19(*c*) will be required.

(*d*) *Samples for Check Analysis.*—When, in addition to the above options on certification, the purchaser desires to make check analyses, sufficient additional material shall be ordered to provide samples for such check analyses. Analyses shall be made in the purchaser's laboratory or elsewhere at the expense of the purchaser.

TABLE III.—PERMISSIBLE VARIATIONS IN LENGTH OF RODS.

Random mill lengths	2 to 12 ft long with not more than 25 per cent by weight under 4 ft.
Multiple lengths	Furnished in multiples of a specified unit length, within the length limits indicated above. For each multiple, an allowance of 1/4 in. will be made for cutting, unless otherwise specified. At the manufacturer's option, individual specified unit lengths may be furnished.
Nominal lengths	Specified nominal lengths having a range of not less than 2 ft, with no short lengths allowed.
Cut lengths	A specified length to which all rods will be cut with a permissible variation as shown in Table II.

(*e*) *Purchaser's Inspection at Place of Manufacture.*—When specified on the purchase order, inspection by the purchaser's representative may be made at the place of manufacture prior to shipment. In such cases, the purchaser or his representative shall state which tests he desires to witness. The manufacturer shall give the purchaser ample notice in writing as to when tests shall be conducted so that the purchaser's representative may witness any tests (excluding check analyses) that he may desire. Unless otherwise agreed, if the purchaser's representative does not present himself at the manufacturer's plant within 14 days after the notified date set for testing, the manufacturer shall consider mill inspection as having been waived, shall proceed with his own testing, and shall furnish the purchaser with a Certificate of Compliance or a Test Report (Paragraphs (*b*) and (*c*)), whichever has been agreed upon between the inspector and the manufacturer.

The manufacturer shall afford the inspector representing the purchaser all reasonable facilities to satisfy him that the material is being furnished in accordance with this specification. Where such plant inspection may involve unusual handling such as unpacking and repacking, retesting and reinspection and other unusual operations resulting in undue loss of time and production, the manufacturer shall so notify the purchaser.

Rejection

20. Material not conforming to this specification or to authorized modifications thereof shall be subject to rejection.

Rehearing

21. Samples tested in accordance with this specification that represent rejected material shall be preserved for not less than three weeks from the date of the test report. In case of dissatisfaction with the results of the tests, the manufacturer may make claim for a rehearing within that time.

APPENDIX

The various conditions and finishes in which rod is procurable are as follows:

(*1*) Rods 5/16 to 2 in., excl, in diameter are furnished in the hot-finished, annealed and descaled condition.

(*2*) Rods 2 to 3 1/2 in., incl, in diameter are furnished in the hot-rolled, annealed, and ground or turned condition.

(*3*) *Heat Treatment.*—Since the corrosion resistance of this alloy may be significantly impaired by the use of improper heat treatment, the manufacturer should be notified by the purchaser of any special heat treatment contemplated which may be significantly at variance with that used normally in mill practices. In the case of fabricated vessels, where heat treatment is to be applied during or subsequent to fabrication, it is recommended that such heat treatment be as agreed upon between the purchaser and the fabricator and, when it is deemed advisable, the manufacturer should also be consulted.

SPECIFICATION FOR TITANIUM AND TITANIUM ALLOY BARS AND BILLETS

SB-348

(IDENTICAL WITH ASTM SPECIFICATION B 348-59T EXCEPT THAT GRADES 4, 5, 6, AND 7 HAVE BEEN DELETED)

Scope

1. (*a*) This specification covers annealed titanium bars and billet as follows:

Grade 1.—Unalloyed titanium.
Grade 2.—Unalloyed titanium.
Grade 3.—Unalloyed titanium.

Basis of Purchase

2. Orders for material under this specification shall include the following information as applicable:

(*1*) Grade number (Section 1),
(*2*) Product classification (Section 4),
(*3*) Restrictive chemistry, grade 1 (Table I),
(*4*) Special mechanical properties (Table III),
(*5*) Marking (Section 9),
(*6*) Finish (Section 10),
(*7*) Packing (Section 12),
(*8*) Required reports (Section 13), and
(*9*) Disposition of rejected material (Section 14).

Manufacture

3. The various titanium mill products covered by this specification are formed with the conventional forging and rolling equipment normally found in primary ferrous and non-ferrous plants. The ingot metal for such mill operations is usually melted in arc furnaces of a type conventionally used for reactive metals.

Product Classification

4. (*a*) *Rounds.*—Metal of round cross-section between $\frac{5}{16}$ and $4\frac{1}{2}$ in. in diameter inclusive, squares of less than 16 sq in. in cross sectional area, and rectangles 10 in. and less in width and greater than $\frac{3}{16}$ in. in thickness and less than 16 sq in. in cross sectional area is classified as bar.

(*b*) *Billet.*—Any product of round or square cross-section having an area 16 sq in. and greater, and rectangles of 16 sq in. and greater in cross sectional area with the width less than five times the thickness is classified as billet.

Chemical Composition

5. (*a*) The grades of titanium covered by this specification shall conform to the requirements as to chemical composition prescribed in Table I.

(*b*) *Check Analysis.*—Check analysis tolerances do not broaden the specified heat analysis requirements, but cover variations between laboratories in the measurement of chemical content. The manufacturer shall not ship material which is outside the limits specified in Table I for the applicable grade. Check Analysis limits shall be as specified in Table II.

Mechanical Properties

6. (*a*) Material supplied under this specification shall conform to the mechanical property requirements given in Table III, as applicable.

(*b*) Specimens for tension tests shall be machined and tested in accordance with the Methods of Tension Testing of Metallic Materials (ASTM Designation: E 8). Tensile properties shall be determined using a strain rate of 0.003 to 0.007 in. per in. per min through the specified yield strength. After the specified yield strength has been marked, the cross-head speed shall be increased to a rate sufficient to produce fracture in approximately 1 min.

TABLE I.—CHEMICAL COMPOSITION REQUIREMENTS.

Element	Grades 1 and 2	Grade 3
Nitrogen, max, per cent	0.05	0.07
Carbon, max, per cent	0.10	0.10
Hydrogen, max, per cent	0.0125 *a, b* 0.0100 *a, c*	0.0125 *b* 0.0100 *c*
Iron, max, per cent	0.20	0.30
Oxygen, max, per cent	0.20	0.30
Titanium, per cent *d*	Remainder	Remainder

a Lower hydrogen may be obtained by negotiation with the supplier.
b Bars only.
c Billets only.
d The percentage of titanium is determined by difference.

Dimensions, Weight, and Permissible Variation.

7. (*a*) *Size.*—Tolerances on titanium material covered by this specification shall be as specified in Tables IV to XI, as applicable.

(*b*) *Weight.*—Quantity extras are applicable to individual items of a grade, thickness, width and length ordered at one time for shipment at one time to one destination. Different lengths of the same size and grade may be combined for quantity extra. The shipping weight of any item of an ordered size in any finish may exceed the theoretical weight by as much as 10 per cent.

TABLE II.—CHECK ANALYSIS LIMITS

Element	Maximum or Range, per cent	Tolerance, per cent
Nitrogen	0.07	+0.02
Carbon	0.15	+0.02
Hydrogen	0.02	+0.002
Iron	0.50	+0.15
Oxygen	0.20	+0.04
Oxygen	0.30	+0.06
Oxygen	0.40	+0.08

TABLE III.—MECHANICAL PROPERTIES.*a*

Grade	Tensile Strength, min, psi	Yield Strength, 0.2 per cent offset, min, psi	Elongation in 2 in., min, per cent	Reduction of Area, min, per cent
1	40 000	30 000	22	30
2	50 000	40 000	20	30
3	60 000	50 000	18	30

a These properties apply to longitudinal sections up to 3 in. in thickness with a maximum of 10 sq in. Mechanical properties of larger sections shall be negotiated between the manufacturer and the purchaser.

TABLE IV.—PERMISSIBLE VARIATIONS IN SIZE FOR TITANIUM BARS—HOT-ROLLED ROUNDS AND SQUARES.

Specified Size, in.	Size Variations, in.	Out-of-Round*a* or Out-of-Square*b*, in.
$\frac{1}{4}$ to $\frac{5}{16}$, incl	±0.005	0.008
Over $\frac{5}{16}$ to $\frac{7}{16}$, incl	±0.006	0.009
Over $\frac{7}{16}$ to $\frac{7}{8}$, incl	±0.007	0.010
Over $\frac{7}{8}$ to $\frac{7}{8}$, incl	±0.008	0.012
Over $\frac{7}{8}$ to 1, incl	±0.009	0.013
Over 1 to $1\frac{1}{8}$, incl	±0.010	0.015
Over $1\frac{1}{8}$ to $1\frac{1}{4}$, incl	±0.011	0.016
Over $1\frac{1}{4}$ to $1\frac{3}{8}$, incl	±0.012	0.018
Over $1\frac{3}{8}$ to $1\frac{1}{2}$, incl	±0.014	0.021
Over $1\frac{1}{2}$ to 2, incl	±$\frac{1}{64}$	0.023
Over 2 to $2\frac{1}{2}$, incl	+$\frac{1}{32}$, −0	0.023
Over $2\frac{1}{2}$ to $3\frac{1}{2}$, incl	+$\frac{3}{64}$, −0	0.035
Over $3\frac{1}{2}$ to $4\frac{1}{2}$, incl	+$\frac{1}{16}$, −0	0.046

a Out-of-round is the difference between the maximum and minimum diameters of the bar, measured at the same cross-section.
b Out-of-square section is the difference in the two dimensions at the same cross-section of a square bar, each dimension being the distance between opposite faces.

TABLE V.—PERMISSIBLE VARIATIONS IN SIZE FOR TITANIUM BARS—HOT-ROLLED HEXAGONS AND OCTAGONS.

Specified Sizes Between Opposite Sides, in.	Size Variation, in.	Maximum Difference 3 Measurements, in.
$\frac{1}{4}$ to $\frac{1}{2}$, incl	±0.007	0.011
Over $\frac{1}{2}$ to 1, incl	±0.010	0.015
Over 1 to $1\frac{1}{2}$, incl	±0.021	0.025
Over $1\frac{1}{2}$ to 2, incl	±$\frac{1}{32}$	$\frac{1}{32}$
Over 2 to $2\frac{1}{2}$, incl	±$\frac{3}{64}$	$\frac{3}{64}$
Over $2\frac{1}{2}$ to $3\frac{1}{2}$, incl	±$\frac{1}{16}$	$\frac{1}{16}$

Finish

8. Titanium bar and billet shall be free from injurious external and internal imperfections of a nature that will interfere with the purpose for which it is intended. Annealed material may be furnished as descaled, sandblasted, ground or rough turned. The manufacturer shall be permitted to remove minor surface imperfections by

TABLE VI.—PERMISSIBLE VARIATIONS IN SIZE FOR TITANIUM BARS—HOT ROLLED FLATS.

Specified Widths, in.	Thickness Variation from Specified Thickness, in.			Width Variation, in.
	⅛ to ½ in., incl	Over ½ to 1 in., incl	Over 1 to 2 in., incl	
To 1 incl	±0.008	±0.010	...	+$\frac{1}{64}$, −$\frac{1}{64}$
Over 1 to 2, incl	±0.012	±0.015	±$\frac{1}{32}$	+$\frac{1}{32}$, −$\frac{1}{32}$
Over 2 to 4, incl	±0.015	±0.020	±$\frac{1}{32}$	+$\frac{1}{16}$, −$\frac{1}{32}$
Over 4 to 6, incl	±0.015	±0.020	±$\frac{1}{32}$	+$\frac{3}{32}$, −$\frac{1}{16}$
Over 6 to 8, incl	±0.016	±0.025	±$\frac{1}{32}$	+$\frac{1}{8}$, −$\frac{5}{32}$
Over 8 to 10, incl	±0.021	±0.031	±$\frac{1}{32}$	+$\frac{5}{32}$, −$\frac{3}{16}$

TABLE VII.—PERMISSIBLE VARIATIONS IN SIZE FOR TITANIUM BARS—COLD-FINISHED ROUNDS.

Specified Size, in.	Size Variation,*a* in.
Over ½ to 1, excl	±0.002
1 to $1\frac{1}{2}$, excl	±0.0025
$1\frac{1}{2}$ to 4, incl	±0.003

a When it is necessary to heat treat or heat treat and pickle after cold finishing, because of special hardness or mechanical property requirements, tolerances are commonly double those shown in this table.

TABLE VIII.—PERMISSIBLE VARIATIONS IN SIZE FOR TITANIUM BARS—COLD-FINISHED HEXAGONS, OCTAGONS, AND SQUARES.

Specified Size, in.	Size Variation,*a* in.
Over ½ to 1, incl	+0, −0.004
Over 1 to 2, incl	+0, −0.006
Over 2 to 3, incl	+0, −0.008
Over 3	+0, −0.010

a When it is necessary to heat treat or heat treat and pickle after cold finishing, because of special hardness or mechanical property requirements, tolerances are commonly double those shown in this table.

TABLE IX.—PERMISSIBLE VARIATIONS IN SIZE FOR TITANIUM BARS—COLD-FINISHED FLATS.

Size Width or Thickness, in.	Width Variations*a* from Specified Thicknesses, in.		Thickness Variation,*a* in.
	½ in. and under	Over ½ in.	
Over ⅜ to 1, incl	±0.004	±0.002	±0.002
Over 1 to 2, incl	±0.006	±0.003	±0.003
Over 2 to 3, incl	±0.008	±0.004	±0.004
Over 3 to $4\frac{1}{2}$, incl	±0.010	±0.005	±0.005

a When it is necessary to heat treat or heat treat and pickle after cold finishing, because of special hardness or mechanical property requirements, tolerances are commonly double those shown in this table.

TABLE X.—PERMISSIBLE VARIATIONS IN LENGTH FOR TITANIUM BARS—HOT ROLLED AND COLD FINISHED.

Specified Sizes, all Shapes, in.	Length Variations, in.	
	To 12, ft incl	Over 12 to 25 ft, incl
To 2 incl	+½, −0	+¾, −0
Over 2 to 4, incl	+¾, −0	+1, −0
Over 4 to 6, incl	+1, −0	+1¼, −0
Over 6 to 9, incl	+1¼, −0	+1½, −0
Over 9 to 12, incl	+1½, −0	+2, −0
Machine Cut after Machine Straightening		
To 3 incl	+⅛, −0	+$\frac{3}{16}$, −0
Over 3 to 6, incl	+$\frac{3}{16}$, −0	+¼, −0
Over 6 to 9, incl	+¼, −0	+$\frac{5}{16}$, −0
Over 9 to 12, incl	+½, −0	+½, −0

TABLE XI.—CAMBER FOR HOT-ROLLED AND COLD-FINISHED TITANIUM BARS FOR MACHINING.

NOTE.—Camber is the greatest deviation of a side from a straight line. Measurement is taken on the concave side of the bar with a straight edge. Unless otherwise specified, hot-rolled and cold-finished bars for machining purposes are furnished machine-straightened to the tolerances specified in this table.

	Tolerance
Hot rolled	⅛ in. in any 5 ft; but may not exceed $\frac{\frac{1}{8} \times \text{No. of ft in length}}{5}$
Cold finished	$\frac{1}{16}$ in. in any 5 ft; but may not exceed $\frac{\frac{1}{16} \times \text{No. of ft in length}}{5}$

SPECIFICATION FOR TITANIUM AND TITANIUM ALLOY BARS AND BILLETS

SB-348

(IDENTICAL WITH ASTM SPECIFICATION B 348-59T EXCEPT THAT GRADES 4, 5, 6, AND 7 HAVE BEEN DELETED)

Scope

1. (*a*) This specification covers annealed titanium bars and billet as follows:

Grade 1.—Unalloyed titanium.
Grade 2.—Unalloyed titanium.
Grade 3.—Unalloyed titanium.

Basis of Purchase

2. Orders for material under this specification shall include the following information as applicable:

(*1*) Grade number (Section 1),
(*2*) Product classification (Section 4),
(*3*) Restrictive chemistry, grade 1 (Table I),
(*4*) Special mechanical properties (Table III),
(*5*) Marking (Section 9),
(*6*) Finish (Section 10),
(*7*) Packing (Section 12),
(*8*) Required reports (Section 13), and
(*9*) Disposition of rejected material (Section 14).

Manufacture

3. The various titanium mill products covered by this specification are formed with the conventional forging and rolling equipment normally found in primary ferrous and non-ferrous plants. The ingot metal for such mill operations is usually melted in arc furnaces of a type conventionally used for reactive metals.

Product Classification

4. (*a*) *Rounds.*—Metal of round cross-section between $\frac{5}{16}$ and $4\frac{1}{2}$ in. in diameter inclusive, squares of less than 16 sq in. in cross sectional area, and rectangles 10 in. and less in width and greater than $\frac{3}{16}$ in. in thickness and less than 16 sq in. in cross sectional area is classified as bar.

(*b*) *Billet.*—Any product of round or square cross-section having an area 16 sq in. and greater, and rectangles of 16 sq in. and greater in cross sectional area with the width less than five times the thickness is classified as billet.

Chemical Composition

5. (*a*) The grades of titanium covered by this specification shall conform to the requirements as to chemical composition prescribed in Table I.

(*b*) *Check Analysis.*—Check analysis tolerances do not broaden the specified heat analysis requirements, but cover variations between laboratories in the measurement of chemical content. The manufacturer shall not ship material which is outside the limits specified in Table I for the applicable grade. Check Analysis limits shall be as specified in Table II.

Mechanical Properties

6. (*a*) Material supplied under this specification shall conform to the mechanical property requirements given in Table III, as applicable.

(*b*) Specimens for tension tests shall be machined and tested in accordance with the Methods of Tension Testing of Metallic Materials (ASTM Designation: E 8). Tensile properties shall be determined using a strain rate of 0.003 to 0.007 in. per in. per min through the specified yield strength. After the specified yield strength has been marked, the cross-head speed shall be increased to a rate sufficient to produce fracture in approximately 1 min.

TABLE I.—CHEMICAL COMPOSITION REQUIREMENTS.

Element	Grades 1 and 2	Grade 3
Nitrogen, max, per cent	0.05	0.07
Carbon, max, per cent	0.10	0.10
Hydrogen, max, per cent	0.0125 *a, b*	0.0125 *b*
	0.0100 *a, c*	0.0100 *c*
Iron, max, per cent	0.20	0.30
Oxygen, max, per cent	0.20	0.30
Titanium, per cent *d*	Remainder	Remainder

[a] Lower hydrogen may be obtained by negotiation with the supplier.
[b] Bars only.
[c] Billets only.
[d] The percentage of titanium is determined by difference.

Dimensions, Weight, and Permissible Variation.

7. (*a*) *Size.*—Tolerances on titanium material covered by this specification shall be as specified in Tables IV to XI, as applicable.

(*b*) *Weight.*—Quantity extras are applicable to individual items of a grade, thickness, width and length ordered at one time for shipment at one time to one destination. Different lengths of the same size and grade may be combined for quantity extra. The shipping weight of any item of an ordered size in any finish may exceed the theoretical weight by as much as 10 per cent.

TABLE II.—CHECK ANALYSIS LIMITS

Element	Maximum or Range, per cent	Tolerance, per cent
Nitrogen	0.07	+0.02
Carbon	0.15	+0.02
Hydrogen	0.02	+0.002
Iron	0.50	+0.15
Oxygen	0.20	+0.04
Oxygen	0.30	+0.06
Oxygen	0.40	+0.08

TABLE III.—MECHANICAL PROPERTIES.[a]

Grade	Tensile Strength, min, psi	Yield Strength, 0.2 per cent offset, min, psi	Elongation in 2 in., min, per cent	Reduction of Area, min, per cent
1	40 000	30 000	22	30
2	50 000	40 000	20	30
3	60 000	50 000	18	30

[a] These properties apply to longitudinal sections up to 3 in. in thickness with a maximum of 10 sq in. Mechanical properties of larger sections shall be negotiated between the manufacturer and the purchaser.

TABLE IV.—PERMISSIBLE VARIATIONS IN SIZE FOR TITANIUM BARS—HOT-ROLLED ROUNDS AND SQUARES.

Specified Size, in.	Size Variations, in.	Out-of-Round[a] or Out-of-Square[b], in.
$\frac{1}{4}$ to $\frac{5}{16}$, incl	±0.005	0.008
Over $\frac{5}{16}$ to $\frac{7}{16}$, incl	±0.006	0.009
Over $\frac{7}{16}$ to $\frac{5}{8}$, incl	±0.007	0.010
Over $\frac{5}{8}$ to $\frac{7}{8}$, incl	±0.008	0.012
Over $\frac{7}{8}$ to 1, incl	±0.009	0.013
Over 1 to $1\frac{1}{8}$, incl	±0.010	0.015
Over $1\frac{1}{8}$ to $1\frac{1}{4}$, incl	±0.011	0.016
Over $1\frac{1}{4}$ to $1\frac{3}{8}$, incl	±0.012	0.018
Over $1\frac{3}{8}$ to $1\frac{1}{2}$, incl	±0.014	0.021
Over $1\frac{1}{2}$ to 2, incl	±$\frac{1}{64}$	0.023
Over 2 to $2\frac{1}{2}$, incl	+$\frac{1}{32}$, −0	0.023
Over $2\frac{1}{2}$ to $3\frac{1}{2}$, incl	+$\frac{3}{64}$, −0	0.035
Over $3\frac{1}{2}$ to $4\frac{1}{2}$, incl	+$\frac{1}{16}$, −0	0.046

[a] Out-of-round is the difference between the maximum and minimum diameters of the bar, measured at the same cross-section.
[b] Out-of-square section is the difference in the two dimensions at the same cross-section of a square bar, each dimension being the distance between opposite faces.

TABLE V.—PERMISSIBLE VARIATIONS IN SIZE FOR TITANIUM BARS—HOT-ROLLED HEXAGONS AND OCTAGONS.

Specified Sizes Between Opposite Sides, in.	Size Variation, in.	Maximum Difference 3 Measurements, in.
$\frac{1}{4}$ to $\frac{1}{2}$, incl	±0.007	0.011
Over $\frac{1}{2}$ to 1, incl	±0.010	0.015
Over 1 to $1\frac{1}{2}$, incl	±0.021	0.025
Over $1\frac{1}{2}$ to 2, incl	±$\frac{1}{32}$	$\frac{1}{32}$
Over 2 to $2\frac{1}{2}$, incl	±$\frac{3}{64}$	$\frac{3}{64}$
Over $2\frac{1}{2}$ to $3\frac{1}{2}$, incl	±$\frac{1}{16}$	$\frac{1}{16}$

Finish

8. Titanium bar and billet shall be free from injurious external and internal imperfections of a nature that will interfere with the purpose for which it is intended. Annealed material may be furnished as descaled, sandblasted, ground or rough turned. The manufacturer shall be permitted to remove minor surface imperfections by

TABLE VI.—PERMISSIBLE VARIATIONS IN SIZE FOR TITANIUM BARS—HOT ROLLED FLATS.

Specified Widths, in.	Thickness Variation from Specified Thickness, in.			Width Variation, in.
	⅛ to ½ in., incl	Over ½ to 1 in., incl	Over 1 to 2 in., incl	
To 1 incl	±0.008	±0.010	...	+$\frac{1}{64}$, −$\frac{1}{64}$
Over 1 to 2, incl	±0.012	±0.015	±$\frac{1}{32}$	+$\frac{1}{32}$, −$\frac{1}{32}$
Over 2 to 4, incl	±0.015	±0.020	±$\frac{1}{32}$	+$\frac{1}{16}$, −$\frac{1}{32}$
Over 4 to 6, incl	±0.015	±0.020	±$\frac{1}{32}$	+$\frac{3}{32}$, −$\frac{1}{16}$
Over 6 to 8, incl	±0.016	±0.025	±$\frac{1}{32}$	+$\frac{1}{8}$, −$\frac{5}{32}$
Over 8 to 10, incl	±0.021	±0.031	±$\frac{1}{32}$	+$\frac{5}{32}$, −$\frac{3}{16}$

TABLE VII.—PERMISSIBLE VARIATIONS IN SIZE FOR TITANIUM BARS—COLD-FINISHED ROUNDS.

Specified Size, in.	Size Variation,[a] in.
Over ½ to 1, excl	±0.002
1 to $1\frac{1}{2}$, excl	±0.0025
$1\frac{1}{2}$ to 4, incl	±0.003

[a] When it is necessary to heat treat or heat treat and pickle after cold finishing, because of special hardness or mechanical property requirements, tolerances are commonly double those shown in this table.

TABLE VIII.—PERMISSIBLE VARIATIONS IN SIZE FOR TITANIUM BARS—COLD-FINISHED HEXAGONS, OCTAGONS, AND SQUARES.

Specified Size, in.	Size Variation,[a] in.
Over ½ to 1, incl	+0, −0.004
Over 1 to 2, incl	+0, −0.006
Over 2 to 3, incl	+0, −0.008
Over 3	+0, −0.010

[a] When it is necessary to heat treat or heat treat and pickle after cold finishing, because of special hardness or mechanical property requirements, tolerances are commonly double those shown in this table.

TABLE IX.—PERMISSIBLE VARIATIONS IN SIZE FOR TITANIUM BARS—COLD-FINISHED FLATS.

Size Width or Thickness, in.	Width Variations[a] from Specified Thicknesses, in.		Thickness Variation,[a] in.
	½ in. and under	Over ½ in.	
Over ⅜ to 1, incl	±0.004	±0.002	±0.002
Over 1 to 2, incl	±0.006	±0.003	±0.003
Over 2 to 3, incl	±0.008	±0.004	±0.004
Over 3 to $4\frac{1}{2}$, incl	±0.010	±0.005	±0.005

[a] When it is necessary to heat treat or heat treat and pickle after cold finishing, because of special hardness or mechanical property requirements, tolerances are commonly double those shown in this table.

TABLE X.—PERMISSIBLE VARIATIONS IN LENGTH FOR TITANIUM BARS—HOT ROLLED AND COLD FINISHED.

Specified Sizes, all Shapes, in.	Length Variations, in.	
	To 12, ft incl	Over 12 to 25 ft, incl
To 2 incl	+$\frac{1}{2}$, −0	+$\frac{3}{4}$, −0
Over 2 to 4, incl	+$\frac{3}{4}$, −0	+1, −0
Over 4 to 6, incl	+1, −0	+$1\frac{1}{4}$, −0
Over 6 to 9, incl	+$1\frac{1}{4}$, −0	+$1\frac{1}{2}$, −0
Over 9 to 12, incl	+$1\frac{1}{2}$, −0	+2, −0
Machine Cut after Machine Straightening		
To 3 incl	+$\frac{1}{8}$, −0	+$\frac{5}{16}$, −0
Over 3 to 6, incl	+$\frac{3}{16}$, −0	+$\frac{1}{4}$, −0
Over 6 to 9, incl	+$\frac{1}{4}$, −0	+$\frac{5}{16}$, −0
Over 9 to 12, incl	+$\frac{1}{2}$, −0	+$\frac{1}{2}$, −0

TABLE XI.—CAMBER FOR HOT-ROLLED AND COLD-FINISHED TITANIUM BARS FOR MACHINING.

NOTE.—Camber is the greatest deviation of a side from a straight line. Measurement is taken on the concave side of the bar with a straight edge. Unless otherwise specified, hot-rolled and cold-finished bars for machining purposes are furnished machine-straightened to the tolerances specified in this table.

	Tolerance
Hot rolled	$\frac{1}{8}$ in. in any 5 ft; but may not exceed $\frac{1}{8} \times \frac{\text{No. of ft in length}}{5}$
Cold finished	$\frac{1}{16}$ in. in any 5 ft; but may not exceed $\frac{1}{16} \times \frac{\text{No. of ft in length}}{5}$

spot grinding if such grinding does not reduce the thickness of the material below the minimum permitted by the tolerance for the thickness ordered.

Sampling

9. Samples for chemical analyses shall be representative of the material being tested. The utmost care must be used in sampling titanium for chemical analysis because of its great affinity for elements such as oxygen, nitrogen, and hydrogen. Therefore, in cutting samples for analysis, the operation should be carried out insofar as possible in a dust-free atmosphere. Chips should be collected from clean metal and tools should be clean and sharp. Samples for analysis should be stored in suitable containers.

Methods of Chemical Analysis

10. The methods of analysis used shall be in accordance with the Methods for Chemical Analysis of Titanium and Titanium-Base Alloys (ASTM Designation: E 120), as applicable or as agreed upon by the manufacturer and the purchaser.

Marking

11. *Identification.*—Unless otherwise specified, individual pieces or bundles shall have attached a metal tag stamped with the purchase order number, the specification number, the nominal size and manufacturer's heat number, or shall be boxed and the box marked with the same information. In addition to the above identification, bars 1 in. and over in diameter or distance between parallel sides shall be stamped with the heat number within 2 in. of one end.

Packing

12. Unless otherwise specified, material purchased under this specification may be packed for shipment either by boxing, crating, single boarding, burlapping, or with no protection in accordance with the manufacturer's standard practice.

Certification

13. If so requested by the purchaser, the manufacturer shall supply at least one copy of his report certifying that the material supplied has been inspected and tested in accordance with the requirements of this specification and that the results of chemical analysis and mechanical tests meet the requirements of this specification for the appropriate grade.

Rejection

14. Material not conforming to this specification or to authorized modifications shall be subject to rejection. Unless otherwise specified, rejected material may be returned to the manufacturer at the manufacturer's expense, unless the purchaser receives, within three weeks of notice of rejection, other instructions for disposition.

SPECIFICATION FOR COPPER AND COPPER-ALLOY SEAMLESS CONDENSER AND HEAT EXCHANGER TUBES WITH INTEGRAL FINS

SB-359

(IDENTICAL WITH ASTM SPECIFICATION B 359–60)

Scope

1. This specification covers external helical, integral finned, seamless tubes of copper and copper alloys, with unfinned-end diameters up to 1 in. inclusive, for use in surface condensers, evaporators, and heat exchangers. The fins shall be produced by the cold forming of copper or copper-alloy prime surface tube.

Ordering Information

2. Purchase orders for material under this specification shall include the following information:

(*1*) Alloy (Section 6),

(*2*) Temper (Section 5),

(*3*) Dimensions: diameter, wall thickness, length of unfinned sections; root diameter and wall thickness of finned section; number of fins per unit length; total tube length (Sections 3 and 13), and

(*4*) Quantity of each size.

General Requirements

3. (*a*) The fin geometry and number of fins per unit length shall be as agreed upon between the manufacturer and the purchaser (see Fig. 1).

(*b*) Finned tubes shall normally be furnished with unfinned ends, but may be furnished with finned ends or stripped ends from which the fins have been removed by machining.

Materials and Manufacture

4. The material shall be of such quality and purity that the finished product shall conform to the requirements prescribed in this specification and shall be cold worked to the specified size. To comply with this specification, the fin and tube material must be homogenous.

Temper

5. (*a*) The tube after finning shall be supplied in either of the following tempers, one of which must be specified on the purchase order:

Annealed temper,
As-Finned temper (Note 1).

NOTE 1.—The finned sections of tube in the as-finned temper are in the cold-worked condition produced by the finning operation. The unfinned sections of tube in the as-finned temper are in the temper used for finning (annealed or light drawn).

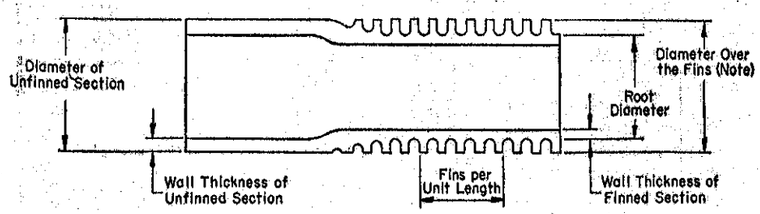

NOTE.—The diameter over the fins will not normally exceed the diameter of the unfinned section.

FIG. 1.—Finned Tube Nomenclature.

(*b*) Alloys other than copper, arsenical copper, 70-30 copper-nickel, 80-20 copper-nickel, and 90-10 copper-nickel furnished in the as-finned temper must be stress-relief annealed after finning and must meet the requirements of the mercurous nitrate test prescribed in Section 11.

(*c*) The unfinned sections of all tubes shall be furnished in the fabricated temper condition suitable for rolling-in operations.

Chemical Requirements

6. The material shall conform to the requirements for chemical composition prescribed in Table I.

Tensile Requirements

7. Prior to the finning operations, the tube shall conform to the requirements for tensile properties prescribed in Table II.

Grain Size

8. (*a*) Samples of finned sections of annealed-temper tubes examined at a magnification of 75 diameters shall show complete recrystallization and shall have an average grain size within the limits of 0.010 to 0.045 mm when the grain size is determined in the wall beneath the fins (see Section 17).

(*b*) The surface of the test specimen for the microscopic examination shall approximate a radial longitudinal section of the tube.

Expansion Test

9. The unfinned sections of all tubes selected for test (Section 17) shall meet the following requirements for expansion: A pin having a taper of $1\frac{1}{2}$ in.

TABLE 1.—CHEMICAL REQUIREMENTS.

Material	Copper,[a] per cent	Tin, per cent	Aluminum, per cent	Nickel,[b] per cent	Lead, max, per cent	Iron, per cent	Zinc, per cent	Manganese, max, per cent	Arsenic, per cent	Antimony, per cent	Phosphorus, per cent
Admiralty metal:											
Type A	70.0 to 73.0	0.9 to 1.2	...	...	0.07	0.06 max	remainder	...	0.02 to 0.10	0.02 to 0.10	0.02 to 0.10
Type B	70.0 to 73.0	0.9 to 1.2	...	...	0.07	0.06 max	remainder	...	...	...	...
Type C	70.0 to 73.0	0.9 to 1.2	...	...	0.07	0.06 max	remainder	...	...	...	...
Type D	70.0 to 73.0	0.9 to 1.2	...	...	0.06	0.05 max	remainder	...	...	...	...
Red brass	84.0 to 86.0	...	...	...	0.07	0.06 max	remainder	...	0.02 to 0.10	...	...
Aluminum brass:											
Type B[c]	76.0 to 79.0	...	1.8 to 2.5	...	0.10	0.10 max	...	1.0	0.35 max	...	...
Aluminum bronze	92.0 min[d]	...	5.0 to 6.5	...	0.05	0.40 to 0.70	1.0 max	1.0	...	...	...
70-30 copper-nickel	65.0 min[d]	...	...	29.0 to 33.0	0.05	0.5 to 1.0	1.0 max	1.0	...	...	...
80-20 copper-nickel type A	74.0 min[d]	...	...	19.0 to 23.0	0.05	0.5 to 2.0	1.0 max	1.0	...	...	...
90-10 copper-nickel	86.5 min[d]	...	...	9.0 to 11.0	0.05	...	...	...	0.15 to 0.50	...	0.015 to 0.040
Copper	99.90 min	...	...	...	...	...	...	...	...	...	0.04 max
Arsenical copper	99.40 min	...	...	...	...	...	...	...	...	...	...

[a] Silver counting as copper.
[b] Cobalt counting as nickel.
[c] Types A, C, and D aluminum brasses and 80-20 copper-nickel type B have been discontinued.
[d] Copper plus sum of named elements shall be 99.5 per cent, min.

per ft shall be driven into the unfinned tube section until the inside diameter at one end has been increased 20 per cent. The expanded tube shall show no cracking or rupture visible to the unaided eye. This requirement applies to all material except copper-nickel, which shall be required to withstand an expansion test of 30 per cent.

Flattening Test

10. Unfinned lengths of tubes selected for test shall be flattened on different elements. Each element shall be slowly flattened by one stroke of a press. The term "flattened" shall be interpreted as that condition which allows a micrometer caliper, set at three times the wall thickness, to pass over the tube freely throughout the flattened part, except at the points where the change in element of flattening takes place. The flattened elements shall not show cracking or rupture visible to the unaided eye.

Mercurous Nitrate Test

11. The test specimens, cut in 6-in. lengths and taken from both the finned portion and the unfinned sections of each sample length, shall withstand an immersion for 30 min in the standard mercurous nitrate solution without cracking. The mercurous nitrate test is not required for copper, arsenical copper, or copper-nickel tubes (see Section 17).

Pressure Test

12. Each tube, after finning, shall be subjected to an internal air pressure of 250 psi minimum for 5 sec without showing evidence of leakage. Any evidence of leakage shall be cause for rejection.

Dimensions and Permissible Variations

13. (*a*) *Diameter.*—The outside diameter of the unfinned sections shall not vary by more than the following amounts as measured by "go" and "no-go" ring gages:

Specified Diameter, in.	Tolerance, in.
0.500 and under	±0.002
Over 0.500 to 0.740, incl	±0.0025
Over 0.740 to 1.000, incl	±0.003

The diameter over the fins shall at no point exceed the diameter of the plain

TABLE II.—TENSILE REQUIREMENTS.

Material	Temper	Tensile Strength, min, psi	Yield Strength, min, psi[a]
Admiralty metal	annealed	45 000	15 000
Red brass	annealed	40 000	12 000
Aluminum brass	annealed	50 000	18 000
Aluminum bronze	annealed	50 000	19 000
70-30 Copper-nickel alloy	annealed	52 000	18 000
80-20 Copper-nickel alloy	annealed	45 000	16 000
90-10 Copper-nickel alloy	annealed	30 000	15 000
Copper	annealed	30 000	9 000
	light-drawn	36 000	30 000
Arsenical copper	annealed	30 000	9 000
	light-drawn	36 000	30 000

[a] At 0.5 per cent extension under load.

sections involved, as determined by a "go" ring gage unless otherwise specified.

(*b*) *Wall Thickness.*—No tube at its thinnest point beneath the fins or in the plain section shall be less than the minimum thickness specified.

(*c*) *Length.*—The length of the tubes shall not be less than that specified when measured at a temperature of 20 C (68 F), but may exceed the specified value by the amounts given in the following table:

Specified Length, ft	Tolerance, all plus, in.
Up to 20, incl	1/8
Over 20 to 30, incl	5/32
Over 30 to 60, incl	1/4

NOTE 2.—For the purpose of determining conformance with the dimensional requirements prescribed in this specification, any measured value outside the specified limiting values for any dimension may be cause for rejection.

(*d*) *Squareness of Cut.*—The angle of cut of the end of any tube may depart from the square by not more than the following:

Tube Outside Diameter, in.	Tolerance, in.
Up to 5/8, incl	0.010
Over 5/8	0.016 per inch of diameter

Workmanship and Finish

14. (*a*) Roundness, straightness, uniformity of the wall thickness, and condition of inner and outer surfaces of the tube shall be such as to make it suitable for the intended application.

(*b*) Annealed-temper tubes shall be clean and smooth but may have a superficial, dull iridescent film on both the inside and outside surfaces. As-finned temper tubes shall be clean and smooth, but may have a superficial film of lubricant on the surface.

Sampling

15. Samples for chemical analysis shall be taken in accordance with the Method of Sampling Wrought Non-Ferrous Metals and Alloys for Determination of Chemical Composition (ASTM Designation: E 55). The lot size, portion size, and selection of pieces shall be as follows:

Lot Size.—600 tubes or 2000 lb, or fraction of either, whichever constitutes the greater weight.

Portion Size.—Pieces from two individual lengths of finished product.

Minimum Weight of Composite Sample.—150 g divided into three equal parts.

Number of Tests

16. When so specified, two tubes shall be selected from each lot prior to finning and be subjected to the tests specified in Section 7. Two tubes shall be selected from each lot of finned tube and subjected to the tests specified in Sections 8, 9, 10, and 11.

Methods of Test

17. The chemical composition and mechanical and physical properties enumerated in this specification shall, in case of disagreement, be determined in accordance with the following methods of the American Society for Testing Materials:

Test	ASTM Designation[a]
Chemical Analysis	E 36, E 53, E 54, E 62, E 75
Tension	E 8
Grain Size	E 2, E 3, E 79
Expansion (Pin Test)	B 153
Mercurous Nitrate	B 154

[a] These designations refer to the following methods of testing:

E 36, Methods for Chemical Analysis of Brasses,
E 53, Method for Chemical Analysis of Copper (Electrolytic Determination of Copper),
E 54, Methods for Chemical Analysis of Special Brasses and Bronzes,
E 62, Photometric Methods for Chemical Analysis of Copper and Copper-Base Alloys,
E 75, Methods for Chemical Analysis of Copper-Nickel and Copper-Nickel-Zinc Alloys,
E 8, Methods of Tension Testing of Metallic Materials,
E 2, Methods of Preparation of Micrographs of Metals and Alloys,
E 3, Methods of Preparation of Metallographic Specimens,
E 79, Methods for Estimating the Average Grain Size of Wrought Copper and Copper-Base Alloys,
B 153, Method of Test for Expansion (Pin Test) of Copper and Copper-Alloy Tubing, and
B 154, Method of Mercurous Nitrate Test for Copper and Copper Alloys.

Significance of Numerical Limits

18. For purposes of determining compliance with the specified limits for requirements of the properties listed in the following table, an observed value or a calculated value shall be rounded off as indicated in accordance with the rounding-off method of the Recommended Practices for Designating Significant Places in Specified Limiting Values (ASTM Designation: E 29).

Property	Rounded-Off Unit for Observed or Calculated Value
Chemical Composition	Nearest unit in the last right-hand place of figures
Grain Size:	
Up to 0.055 mm, incl.	Nearest multiple of 0.005 mm

Retests

19. If any test specimen representing a lot fails to conform to the requirements of Sections 6, 8, 9, 10, and 11, two additional specimens, at the option of the manufacturer, may be taken as before, and submitted for check analysis or subjected to any test in which the original specimen failed, but both of these specimens shall conform to the requirements specified.

Packing and Marking

20. (*a*) The material shall be packed in such a manner as to prevent damage in ordinary handling and transportation.

(*b*) Each box or crate shall be legibly marked with the purchase order number, specification number, alloy designation, size, temper, gross and net weight, and name of manufacturer.

Rejection

21. Material that fails to conform to this specification will be rejected, and the manufacturer shall be notified within 30 days after receipt of the material.

GENERAL SPECIFICATIONS

GENERAL SPECIFICATIONS

SPECIFICATION FOR GENERAL REQUIREMENTS FOR DELIVERY OF ROLLED STEEL PLATES, SHAPES, SHEET PILING, AND BARS FOR STRUCTURAL USE SA-6

(IDENTICAL WITH ASTM SPECIFICATION A 6-61T)

Scope

1. This specification covers a group of common requirements which, unless otherwise specified in the purchase order or in an individual specification, shall apply to rolled steel plates, shapes, sheet piling and bars under each of the following specifications issued by the American Society for Testing Materials:

Title of Specification	ASTM Designation[a]
Steel for Bridges and Buildings	A 7
Structural Nickel Steel	A 8
Structural Silicon Steel	A 94
Structural Steel	A 36
Structural Steel for Locomotives and Cars	A 113
Structural Steel for Ships	A 131
Structural Rivet Steel	A 141
High-Strength Structural Rivet Steel	A 195
Low-Alloy Structural Steel	A 242
Low and Intermediate Tensile Strength Carbon-Steel Plates of Structural Quality	A 283
Intermediate Tensile Strength Carbon-Silicon Steel Plates for Machine Parts and General Construction	A 284
Steel Sheet Piling	A 328
Structural Steel for Welding	A 373
High-Strength Structural Alloy Rivet Steel	A 406
High-Strength Structural Steel	A 440
High-Strength Low Alloy Structural Vanadium Steel	A 441

[a] These designations refer to the latest issue of the respective specifications.

Definitions

2. The following definitions shall apply:

(*a*) *Plates.*—Flat hot-rolled steel classified as follows:

(*1*) *When Ordered to Thickness:*

Over 8 in. in width and 0.230 in. or over in thickness,

Over 48 in. in width and 0.180 in. or over in thickness;

(*2*) *When Ordered to Weight per Square Foot:*

Over 8 in. in width and 9.62 lb per sq ft, or heavier,

Over 48 in. in width and 7.53 lb per sq ft, or heavier.

Slabs, sheet bars and skelp, though frequently falling in the foregoing size ranges, are not classed as plates.

(*b*) *Shapes.*—Rolled flanged sections having at least one dimension of the cross-section 3 in. or greater.

(*c*) *Sheet Piling.*—Steel sheet piling consists of rolled sections which can be interlocked, so that a continuous wall is formed when individual pieces are driven side by side.

(*d*) *Bars.*—Rounds, squares and hexagons, of all sizes; flats $\frac{13}{64}$ in. (0.2031 in.) and over in specified thickness, not over 6 in. in width; flats 0.230 in. and over n specified thickness, over 6 to 8 in., incl, in specified width; and bar size shapes under 3 in. in maximum dimension.

Ladle Analysis

3. An analysis of each heat of open-hearth or electric-furnace steel shall be made by the manufacturer to determine the percentages of carbon, manganese, phosphorus and sulfur; of copper when copper steel is specified; and of any other elements specified or restricted by the applicable specification. This analysis shall be made from a test ingot taken during the pouring of the heat. The chemical composition thus determined shall be reported to the purchaser or his representative, and shall conform, as to elements required or restricted by the applicable specification, to the requirements thereof for ladle analysis.

Check Analysis

4. An analysis may be made by the purchaser from finished material representing each heat. The chemical composition thus determined shall conform, as to elements required or restricted by the applicable specification, to the requirements thereof for check analysis.

Permissible Variations in Dimensions or Weight[a]

5. (*a*) One cubic inch of rolled steel shall be assumed to weigh 0.2833 lb.

(*b*) *Plates.*—The permissible variations for dimensions and workmanship shall not exceed the applicable limits stated in Tables I to XI, inclusive.

(*c*) *Shapes.*—The cross-sectional area or weight of each structural-size shape shall not vary more than 2.5 per cent from the theoretical or specified amounts. The permissible variations from dimensions and workmanship for structural-size shapes shall not exceed the applicable limits prescribed in the Tables XII to XIV, inclusive, XXII, XXIII and XXV.

(*d*) *Sheet Piling.*—The weight of each steel sheet pile shall not vary more than 2.5 per cent from the theoretical or specified weight. The length of each steel sheet pile shall not vary more than 5 in. over, and shall not be less than the length specified.

(*e*) *Bars.*—The variations from nominal dimensions of hot-rolled bars shall not exceed the applicable limits prescribed in Tables XV to XXII, inclusive and XXIV.

Test Specimens

6. (*a*) Test specimens shall be prepared for testing from the material in its rolled or forged condition, except as

[a] See Index to Tables of Permissible Variations at end of text.

specified in Paragraph (*b*).

(*b*) Test specimens for annealed material shall be prepared from the material as annealed for use, or from a short length of a full section from the same heat similarly treated.

(*c*) Test specimens shall be taken longitudinally and, except as specified in Paragraphs (*e*), (*f*) and (*g*), shall be the full thickness or section of material as rolled.

(*d*) Tension and bend test specimens for plates, shapes, and flats may be machined to the form and dimensions shown in Fig. 1, or with both edges parallel.

(*e*) Tension test specimens for material over 1½ in. in thickness or diameter, except pins and rollers, may be machined to a thickness or diameter of at least ¾ in. for a length of at least 9 in., or they

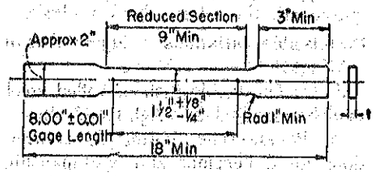

Note 1.—When necessary, it is permissible to use a narrower specimen but in such a case the reduced portion shall be not less than 1 in. in width.

Note 2.—The dimension "*t*" is the thickness of the test specimen as provided for in the applicable material specifications.

Note 3.—The reduced section shall be parallel within 0.010 in. and may have a gradual taper in width from the ends toward the center with the ends not more than 0.010 in. wider than the center.

Note 4.—The ends of the specimen shall be symmetrical with the center line of the reduced section within 0.10 in.

Fig. 1.—Standard Rectangular Tension Test Specimen with 8-in. Gage Length.

may conform to the dimensions shown in Fig. 2.

(*f*) Bend test specimens for material over 1½ in. in thickness or diameter, except pins and rollers, may be machined to a thickness or diameter of at least ¾ in. or to 1 by ½ in. in section. When the test is made on a specimen reduced in thickness, the rolled surface shall be on the outer curve of the bend.

(*g*) Tension test specimens for pins and rollers shall conform to the dimensions shown in Fig. 2, and bend test specimens shall be 1 by ½ in. in section.

(*h*) Tension and bend test specimens for pins and rollers may be taken so that the axis is midway, if practicable, between the center and surface. Tension and bend test specimens for pins and rollers 3 in. and over in diameter shall be taken so that the axis is 1 in. from the surface.

(*i*) The sides of the bend test specimens may have the corners rounded to a radius not over $\frac{1}{16}$ in. for material 2 in. and under in thickness, and not over ⅛ in. for material over 2 in. in thickness.

Methods of Testing

7. All tests shall be conducted in accordance with the Tentative Methods and Definitions for the Mechanical Testing of Steel Products (ASTM Designation: A 370).

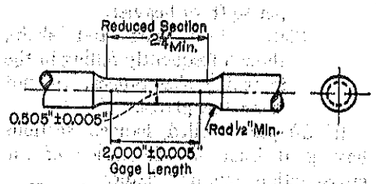

Note 1.—The gage length and fillets shall be as shown, but the ends may be of any shape to fit the holders of the testing machine in such a way that the load shall be axial.

Note 2.—The reduced section may have a gradual taper from the ends toward the center, with the ends not more than 0.005 in. larger in diameter than the center.

Fig. 2.—Standard Round Tension Test Specimen with 2-in. Gage Length.

Defects

8. (*a*) The material shall be free from injurious defects and shall have a workmanlike finish.

(*b*) *Plates.*—Plates may be conditioned by the manufacturer for the removal of surface imperfections or depressions on either surface by grinding, provided the ground area is well flared and the grinding does not reduce the thickness of the plate as rolled:

More than 7 per cent of the nominal thickness for plates ordered to weight per square foot, but in no case more than ⅛ in., or

Below the permissible minimum thickness for plates ordered to thickness in inches.

Plates may have surface imperfections removed by chipping and then depositing weld metal, subject to the following limiting conditions:

(*1*) The chipped area of each surface of a plate shall not exceed 2 per cent of the area of that surface.

(*2*) After removal of any imperfections preparatory to welding, the thickness of the plate at any location must not be reduced by more than 20 per cent of the nominal thickness of the plate.

(*3*) An experienced mill inspector shall inspect the work to see that the defects have been completely removed and that the limitations specified in Items (*1*) and (*2*) have not been exceeded. The inspector representing the purchaser shall be given full opportunity to make this same inspection.

(*4*) All welding shall be performed by qualified welding operators using suitable coated mild steel electrodes. Welds shall be sound, the weld metal being thoroughly fused on all surfaces and edges without undercutting or overlap. Weld metal shall project at least $\frac{1}{16}$ in. above the rolled surface after welding, and the projecting metal shall be removed by grinding, or chipping and grinding, to make it flush with the rolled surface and produce a workmanlike finish.

(*c*) *Structural-Size Sections and Sheet Piling* may be conditioned by the manufacturer for the removal of injurious surface imperfections or depressions on their surfaces by grinding, or chipping and grinding, provided the area is ground in a workmanlike manner and the depression does not extend below the rolled surface of the shape more than the following:

$\frac{1}{32}$ in. in material less than ⅜ in. in thickness, or

$\frac{1}{16}$ in. in material ⅜ in. and over in thickness.

Surface imperfections, which are greater in depth than the limits shown above, may be removed by chipping or grinding and then depositing weld metal, subject to the following limiting conditions:

(*1*) The total area of the chipped or ground surface of any piece prior to welding shall not exceed 2 per cent of the total surface area of that piece.

(*2*) The reduction of thickness of the

material resulting from removal of imperfections at any location, prior to welding, shall not exceed 30 per cent of the nominal thickness at the location of the imperfection; nor shall the depth of depression prior to welding exceed ½ in. in any case.

(*3*) The toes of angles, beams, channels and zees and the stems and toes of tees may be conditioned by grinding or chipping and welding. Prior to welding, the depth of depression, measured from the toe inward, shall be limited to the thickness of the material at the base of the depression, with a maximum depth limit of ½ in.

(*4*) The interlock of any sheet piling section may be conditioned by welding and grinding to correct or build up the interlock at any location not to exceed 2 percent of the total surface area.

(*5*) All welding shall be performed by qualified welders using low hydrogen welding electrodes conforming to the proper series of the EXX15, EXX16 or EXX18 (Classifications of the Specification for Mild Steel Arc-Welding Electrodes (ASTM Designation: A 233), unless otherwise specified in the basic specification. The electrodes shall be protected from moisture pickup during storage and use. The welds shall be sound, the weld metal being thoroughly fused to all surfaces and edges without undercutting or overlap. Weld metal shall project at least $\frac{1}{16}$ in. above the rolled surface after welding, and the projecting metal shall be removed by grinding, or chipping and grinding to make it flush with the rolled surface and produce a workmanlike finish.

An experienced mill inspector shall inspect the work to see that the imperfections have been completely removed and that limitations specified above have not been exceeded. The inspector representing the purchaser shall, at his option, be given full opportunity to make this same inspection.

(*d*) *Bars* may be conditioned by the manufacturer for the removal of surface imperfections by grinding, chipping, or some other means, provided the conditioned area is well flared and the effective sectional area is not reduced by more than the permissible variations prescribed in the applicable tables of Section 5.

Marking

9. (*a*) *Plates.*—Each plate shall be steel die stamped, marked, or stenciled in one place with heat number, manufacturer's name, brand, or trade mark, size and thickness; except that unless otherwise specified, such marking in the case of secured lifts of plates ⅜ in.[5] and under in thickness of all sizes, and of plates 36 in. and under in width in all thicknesses may be steel die stamped, marked or stenciled on only the top piece of each lift, or may be shown on a substantial tag attached to each lift.

(*b*) *Shapes.*—Structural shapes and sheet piling shall be marked with the heat number, manufacturer's name, brand, or trade mark, size of section length, and mill identification marks on each piece; except that small structural shapes with the greatest cross-sectional dimension not greater than 5 in. may be bundled for shipment with each lift marked or tagged showing the above listed identification.

(*c*) *Bars.*—Bars and bar-size shapes in secured lifts shall be identified with a tag showing customer's order number, grade or specification, size, length, weight of lift, and heat number. Bars and bar-size shapes are not required to be die stamped.

Inspection and Testing

10. The inspector representing the purchaser shall have free entry, at all times while work on the contract of the purchaser is being performed, to all parts of the manufacturer's works that concern the manufacture of the material ordered. The manufacturer shall afford the inspector, without charge, all reasonable facilities to satisfy him that the material is being furnished in accordance with these specifications. All tests (except check analysis) and inspection shall be made at the place of manufacture prior to shipment, unless otherwise specified, and shall be so conducted as not to interfere with the operation of the works.

[5] For material specified for bridge construction 5/16 in. applies instead of 3/8 in. in the above section.

Retests

11. (*a*) If any test specimen shows defective machining or develops flaws, it may be discarded and another specimen substituted.

(*b*) If the percentage of elongation of any tension test specimen is less than that specified and any part of the fracture is more than ¾ in. from the center of the gage length of a 2-in. specimen or is outside the middle half of the gage length of an 8-in. specimen, as indicated by scribe scratches marked on the specimen before testing, a retest shall be allowed.

(*c*) If the results on an original tensile specimen are within 2000 psi of the required tensile strength, within 1000 psi of the required yield point, or within 2 per cent of the required elongation, a retest shall be permitted for which one random specimen from the heat or test lot shall be used. If the results on this retest specimen meet the specified requirements, the heat or test lot will be accepted.

(*d*) If a bend specimen fails, due to conditions of bending more severe than required by the specification, a retest shall be permitted, either on a duplicate specimen or on a remaining portion of the failed specimen.

Rejection

12. (*a*) Unless otherwise specified, any rejection based on check analysis made in accordance with the material specification shall be reported to the manufacturer within five working days from receipt of samples by the purchaser.

(*b*) Samples that represent rejected material shall be preserved for two weeks from the date of the test report. In case of dissatisfaction with the results of the tests, the manufacturer may make claim for a rehearing within that time.

(*c*) Material that shows injurious defects subsequent to its acceptance at the manufacturer's works will be rejected, and the manufacturer shall be notified.

INDEX TO TABLES OF PERMISSIBLE VARIATIONS.

Dimension	Table
Camber:	
Angles, Split	XX
Plates, Sheared and Universal Mill (2 in. and under in thickness)	IX
Plates, Universal Mill (over 2 in. in thickness)	X
Shapes, Standard	XVI
Shapes, Wide Flange	XIX
Tees, Split	XX
Cross-Section of Shapes, Bars, and Bar Shapes:	
Angles, Split	XX
Angles, Tees, and Zees, Rolled	XIII
Angles, Bar-Size	XXI
Beams, Standard; H Beams; Channels	XII
Beams, Wide Flange	XVII
Channels, Bar-Size	XXII
Hexagons	XXVI
Ovals; Half Ovals; Half Rounds; Special Bar-Size Shapes	XXVII
Rounds and Squares	XXV
Tees, Rolled, Bar-Size	XXIII
Tees, Split	XX
Diameter:	
Plates, Sheared	VI
Plates, Gas Cut	VIII
Rounds	XXV
Ends Out-of-Square:	
Shapes, Other Than Wide Flange	XV
Shapes, Wide Flange	XVIII
Flatness:	
Plates	XI
Length:	
Angles, Split	XX
Bars and Bar-Size Shapes	XXIX
Plates, Sheared and Universal Mill	IV
Plates, Gas Cut	VII
Shapes, Standard	XIV
Shapes, Wide Flange	XVIII
Tees, Split	XX
Straightness:	
Bars and Bar-Size Shapes	XXVIII
Sweep:	
Shapes, Standard	XVI
Shapes, Wide Flange	XIX
Thickness:	
Flats	XXIV
Plates, 2 in. and Under in Thickness	I
Plates, Over 2 in. in Thickness	III
Weight:	
Plates	II
Width:	
Flats	XXIV
Plates, Sheared	IV
Plates, Universal Mill	V
Plates, Gas Cut	VII

TABLES OF PERMISSIBLE VARIATIONS

TABLE I.—PERMISSIBLE VARIATIONS IN THICKNESS AND WEIGHT FOR RECTANGULAR SHEARED PLATES AND UNIVERSAL MILL PLATES 2 IN. AND UNDER IN THICKNESS WHEN ORDERED TO THICKNESS.

Specified Thickness, in.	Permissible Excess in Average Weight of Lots[a] for Widths Given in Inches, Expressed in Percentages of Nominal Weights										
	48 and under	Over 48 to 60, excl.	60 to 72, excl.	72 to 84, excl.	84 to 96, excl.	96 to 108, excl.	108 to 120, excl.	120 to 132, excl.	132 to 144, excl.	144 to 168, excl.	168 and over
To ¼, excl	7.0	8.0	9.0	10.0	12.0	14.0	16.0	18.0	21.0	...	...
¼ to 5/16, excl	6.0	7.0	8.0	9.0	10.0	12.0	14.0	16.0	19.0	...	...
5/16 to 3/8, excl	5.0	6.0	7.0	8.0	9.0	10.0	12.0	14.0	17.0	18.0	...
3/8 to 7/16, excl	4.5	5.0	6.0	7.0	8.0	9.0	10.0	12.0	15.0	16.0	18.0
7/16 to ½, excl	4.0	4.5	5.0	6.0	7.0	8.0	9.0	10.0	13.0	14.0	16.0
½ to 5/8, excl	4.0	4.0	4.5	5.0	6.0	7.0	8.0	9.0	11.0	12.0	14.0
5/8 to ¾, excl	4.0	4.0	4.0	4.5	5.0	6.0	7.0	8.0	9.0	10.0	12.0
¾ to 1, excl	3.5	4.0	4.0	4.0	4.5	5.0	6.0	7.0	8.0	9.0	11.0
1 to 2, incl	3.5	3.5	4.0	4.0	4.0	4.5	5.0	6.0	7.0	8.0	9.0

[a] The term "lot" means all the plates of each tabular width and thickness group represented in each shipment.

NOTE 1.—Permissible variation under specified thickness, 0.01 in.

NOTE 2.—Permissible overweight for circular and sketch plates shall be 1¼ times the amounts in the above table.

NOTE 3.—Permissible variations in overweight for single plates shall be 1⅓ times the amounts in the above table.

NOTE 4.—Permissible overweight for single circular and sketch plates shall be 1⅔ times the amounts in the above table.

NOTE 5.—The adopted standard density for rolled steel is 0.2833 lb per cu in.

TABLE II.—PERMISSIBLE VARIATIONS IN WEIGHT FOR RECTANGULAR SHEARED PLATES AND UNIVERSAL MILL PLATES 2 IN. AND UNDER IN THICKNESS WHEN ORDERED TO WEIGHT.

Specified Weights, lb per sq ft	Permissible Variation in Average Weight of Lots[a] for Widths Given in Inches, Expressed in Percentages of the Specified Weights per Square Foot																					
	48 and under		Over 48 to 60, excl.		60 to 72, excl.		72 to 84, excl.		84 to 96, excl.		96 to 108, excl.		108 to 120, excl.		120 to 132, excl.		132 to 144, excl.		144 to 168, excl.		168 and over	
	Over	Under	Over	Under	Over	Under	Over	Under	Over	Under	Over	Under	Over	Under	Over	Under	Over	Under	Over	Under	Over	Under
To 10, excl	4.0	3.0	4.5	3.0	5.0	3.0	5.5	3.0	6.0	3.0	7.5	3.0	9.0	3.0	...	...	...	...	...	...	...	...
10 to 12.5, excl	4.0	3.0	4.5	3.0	5.0	3.0	5.5	3.0	6.0	3.0	6.5	3.0	7.0	3.0	8.0	3.0	9.0	3.0	...	...	...	...
12.5 to 15.0, excl	4.0	3.0	4.0	3.0	4.5	3.0	5.0	3.0	5.5	3.0	5.5	3.0	6.0	3.0	7.5	3.0	8.0	3.0	11	3.0	...	...
15 to 17.5, excl	3.5	3.0	3.5	3.0	4.0	3.0	4.5	3.0	5.0	3.0	5.0	3.0	5.5	3.0	6.0	3.0	7.0	3.0	9.0	3.0	10	3.0
17.5 to 20, excl	3.5	2.5	3.5	2.5	3.5	3.0	4.0	3.0	4.5	3.0	4.5	3.0	5.0	3.0	5.5	3.0	6.0	3.0	8.0	3.0	9.0	3.0
20 to 25, excl	3.5	2.5	3.5	2.5	3.5	3.0	3.5	3.0	4.0	3.0	4.0	3.0	4.5	3.0	5.0	3.0	5.5	3.0	7.0	3.0	8.0	3.0
25 to 30, excl	3.0	2.5	3.5	2.5	3.5	2.5	3.5	3.0	3.5	3.0	3.5	3.0	4.0	3.0	4.5	3.0	5.0	3.0	6.5	3.0	7.0	3.0
30 to 40, excl	3.0	2.0	3.0	2.0	3.0	2.0	3.0	2.0	3.5	2.0	3.5	2.5	3.5	2.5	4.0	3.0	4.5	3.0	6.0	3.0	6.5	3.0
40 to 81.6, incl	2.5	2.0	3.0	2.0	3.0	2.0	3.0	2.0	3.5	2.0	3.5	2.0	3.0	2.5	3.3	3.0	4.0	3.0	5.5	3.0	6.0	3.0

[a] The term "lot" means all the plates of each tabular width and weight group represented in each shipment.

NOTE 1.—Permissible overweight for circular and sketch plates shall be 1¼ times the amounts in the above table.

NOTE 2.—Permissible variations in weight for single plates shall be 1⅓ times the amounts in the above table.

NOTE 3.—Permissible overweight for single circular and sketch plates shall be 1⅔ times the amounts in the above table.

NOTE 4.—The adopted standard density for rolled steel is 0.2833 lb per cu in.

TABLE III.—PERMISSIBLE VARIATIONS IN THICKNESS FOR RECTANGULAR MILL AND UNIVERSAL MILL PLATES OVER 2 IN. IN THICKNESS.

Specified Thickness, in.	Variations Over Specified Thickness for Widths Given, in.					
	To 36, excl.	36 to 60, excl.	60 to 84, excl.	84 to 120, excl.	120 to 132, excl.	132 and over
Over 2 to 3, excl	1/16	3/32	7/64	1/8	1/8	9/64
3 to 4, excl	3/64	3/32	7/64	1/8	1/8	9/64
4 to 6, excl	3/32	1/8	9/64	9/64	5/32	11/64
6 to 8, excl	7/64	1/8	5/32	5/32	11/64	...
8 to 10, excl	5/32	11/64	3/16	3/16	...	...
10 to 12, excl	11/64	3/16	13/64	13/64	...	...
12 to 15, incl	13/64	7/32	1/4	...	...	...

NOTE 1.—Permissible variation under specified thickness, 0.01 in.

TABLE IV.—PERMISSIBLE VARIATIONS IN WIDTH AND LENGTH FOR SHEARED PLATES 1½ IN. AND UNDER IN THICKNESS; LENGTH ONLY OF UNIVERSAL MILL PLATES 2½ IN. AND UNDER IN THICKNESS.

Specified Dimensions, in.		Variations over Specified Width and Length for Thicknesses, in., and Equivalent Weights, lb per sq ft, Given							
		To 5/16, excl.		5/16 to 5/8, excl.		5/8 to 1, excl.		1 to 2, incl.[a]	
Length	Width	To 15.3, excl.		15.3 to 25.5, excl.		25.5 to 40.8, excl.		40.8 to 81.6, incl.	
		Width	Length	Width	Length	Width	Length	Width	Length
To 120, excl.	To 60, excl.	3/8	1/2	7/16	5/8	1/2	3/4	5/8	1
	60 to 84, excl.	7/16	5/8	1/2	11/16	5/8	7/8	3/4	1
	84 to 108, excl.	1/2	3/4	5/8	7/8	3/4	1	1	1 1/8
	108 and over	5/8	7/8	3/4	1	7/8	1 1/8	1 1/8	1 1/4
120 to 240, excl.	To 60, excl.	3/8	3/4	1/2	7/8	5/8	1	3/4	1 1/8
	60 to 84, excl.	1/2	3/4	5/8	7/8	3/4	1	7/8	1 1/4
	84 to 108, excl.	9/16	7/8	11/16	1 1/16	13/16	1 1/8	1	1 3/8
	108 and over	5/8	1	3/4	1 1/8	7/8	1 1/4	1 1/8	1 3/8
240 to 360, excl.	To 60, excl.	3/8	1	1/2	1 1/8	5/8	1 1/4	3/4	1 1/2
	60 to 84, excl.	1/2	1	5/8	1 1/8	3/4	1 1/4	7/8	1 1/2
	84 to 108, excl.	9/16	1	11/16	1 1/8	7/8	1 3/8	1	1 1/2
	108 and over	11/16	1 1/8	7/8	1 1/4	1	1 3/8	1 1/4	1 3/4
360 to 480, excl.	To 60, excl.	7/16	1 1/8	1/2	1 1/4	5/8	1 3/8	3/4	1 5/8
	60 to 84, excl.	1/2	1 1/4	5/8	1 3/8	3/4	1 1/2	7/8	1 5/8
	84 to 108, excl.	9/16	1 1/4	3/4	1 3/8	7/8	1 1/2	1	1 7/8
	108 and over	3/4	1 3/8	7/8	1 1/2	1	1 5/8	1 1/4	1 7/8
480 to 600, excl.	To 60, excl.	7/16	1 1/4	1/2	1 1/2	5/8	1 5/8	3/4	1 7/8
	60 to 84, excl.	1/2	1 3/8	5/8	1 1/2	3/4	1 5/8	7/8	1 7/8
	84 to 108, excl.	5/8	1 3/8	3/4	1 1/2	7/8	1 5/8	1	1 7/8
	108 and over	3/4	1 1/2	7/8	1 5/8	1	1 3/4	1 1/4	1 7/8
600 to 720, excl.	To 60, excl.	1/2	1 3/4	5/8	1 7/8	3/4	1 7/8	7/8	2 1/4
	60 to 84, excl.	5/8	1 3/4	3/4	1 7/8	7/8	1 7/8	1	2 1/4
	84 to 108, excl.	5/8	1 3/4	3/4	1 7/8	7/8	1 7/8	1 1/8	2 1/4
	108 and over	7/8	1 3/4	1	2	1 1/8	2 1/4	1 1/4	2 1/2
720 and over	To 60, excl.	9/16	2	3/4	2 1/8	7/8	2 1/4	1	2 3/4
	60 to 84, excl.	3/4	2	7/8	2 1/8	1	2 1/4	1 1/8	2 3/4
	84 to 108, excl.	3/4	2	7/8	2 1/8	1	2 1/4	1 1/4	2 3/4
	108 and over	1	2	1 1/8	2 3/8	1 1/4	2 1/2	1 3/8	3

[a] Permissible variations in length apply also to Universal Mill plates up to 12 in. in width for thicknesses over 2 to 2½ in., incl.

NOTE.—Permissible variation under specified width and length, ¼ in.

TABLE V.—PERMISSIBLE VARIATIONS IN ROLLED WIDTH FOR UNIVERSAL MILL PLATES 15 IN. AND UNDER IN THICKNESS.

Specified Width, in.	Variations Over Specified Width for Thickness, in., and Equivalent Weights, lb per sq ft, Given					
	To 3/8, excl	3/8 to 5/8, excl.	5/8 to 1, excl.	1 to 2, incl.	Over 2 to 10, incl.	Over 10 to 15, incl.
	To 15.3, excl.	15.3 to 25.5, excl.	25.5 to 40.8, excl.	40.8 to 81.6, incl.	....	....
Over 8 to 20, excl	1/8	1/8	3/16	1/4	3/8	1/2
20 to 36, excl	3/16	1/4	5/16	3/8	7/16	9/16
36 and over	5/16	5/16	7/16	1/2	9/16	5/8

NOTE.—Permissible variation under specified width, ⅛ in.

TABLE VI.—PERMISSIBLE VARIATIONS IN DIAMETER FOR SHEARED CIRCULAR PLATES 1 IN. AND UNDER IN THICKNESS.

Specified Diameter, in.	Permissible Variations Over Specified Diameter for Thicknesses Given, in.		
	To 3/8, excl.	3/8 to 5/8, excl.	5/8 to 1, incl.
To 32, excl	1/4	3/8	1/2
32 to 84, excl	5/16	7/16	9/16
84 to 108, excl	3/8	1/2	5/8
108 to 130, incl	7/16	9/16	11/16

NOTE.—No permissible variations under.

TABLE VII.—PERMISSIBLE VARIATIONS IN WIDTH AND LENGTH FOR RECTANGULAR PLATES WHEN GAS CUTTING IS SPECIFIED OR REQUIRED.

Specified Thickness, in.	Variations Over for All Specified Widths or Lengths, in.
To 2, excl	1/2
2 to 4, excl	5/8
4 to 6, excl	3/4
6 to 8, excl	7/8
8 to 15, incl	1

NOTE 1.—These variations may be taken all under or divided over and under, if so specified.

NOTE 2.—Plates with universal rolled edges will be gas cut to length only.

TABLE VIII.—PERMISSIBLE VARIATIONS IN DIAMETER FOR GAS CUT CIRCULAR PLATES.

Specified Diameter, in.	Variations Over Specified Diameter for Thicknesses Given, in.					
	To 1, excl.	1 to 2, excl.	2 to 4, excl.	4 to 6, excl.	6 to 8, excl.	8 to 15, incl.
To 32, excl	3/8	1/2	9/16	5/8	3/4	7/8
32 to 84, excl	7/16	9/16	5/8	3/4	7/8	1
84 to 108, excl	9/16	11/16	3/4	7/8	1	1 1/8
108 to 130, incl	5/8	3/4	7/8	1	1 1/8	1 1/4

NOTE.—No permissible variations under.

TABLE IX.—PERMISSIBLE CAMBER FOR SHEARED PLATES AND UNIVERSAL MILL PLATES 2 IN. AND UNDER IN THICKNESS.

Maximum permissible camber, in. =

$$\frac{1}{8} \text{ in.} \times \frac{\text{number of feet of length}}{5}$$

TABLE X.—PERMISSIBLE CAMBER FOR UNIVERSAL MILL PLATES OVER 2 IN. IN THICKNESS.

Dimension, in.		Camber for Thicknesses and Widths Given
Thickness	Width	
Over 2 to 15, incl	To 30, incl	$\frac{3}{16}$ in. × $\frac{\text{number of feet of length}}{5}$
Over 2 to 15, incl	Over 30 to 60, incl	$\frac{1}{4}$ in. × $\frac{\text{number of feet of length}}{5}$

TABLE XI.—PERMISSIBLE VARIATIONS FROM FLATNESS FOR CARBON-STEEL RECTANGULAR SHEARED PLATES, UNIVERSAL MILL PLATES, AND CIRCULAR AND SKETCH PLATES.

Specified Thickness, in.	Specified Weight, lb per sq ft.	Permissible Variations from a Flat Surface for Specified Widths, in.[a]										
		To 36, excl.	36 to 48, excl.	48 to 60, excl.	60 to 72, excl.	72 to 84, excl.	84 to 96, excl.	96 to 108, excl.	108 to 120, excl.	120 to 144, excl.	144 to 168, excl.	168 and Over
To ¼, excl.	To 10.2, excl.	5/8	7/8	1 1/16	1 3/8	1 1/2	1 5/8	1 3/4	1 7/8	2	...	...
¼ to 3/8, excl.	10.2 to 15.3, excl.	9/16	3/4	7/8	1 1/16	1 1/4	1 3/8	1 7/16	1 9/16	1 7/8	...	...
3/8 to ½, excl.	15.3 to 20.4, excl.	1/2	5/8	1 1/16	3/4	7/8	1	1 1/8	1 1/4	1 7/16	2	2 1/2
½ to ¾, excl.	20.4 to 30.6, excl.	7/16	9/16	5/8	1 1/16	3/4	7/8	1 1/8	1 1/8	1 1/8	1 3/4	2 1/4
¾ to 1, excl.	30.6 to 40.8, excl.	7/16	9/16	5/8	1 1/16	1 1/16	3/4	1 3/16	1 5/16	1	1 1/2	2
1 to 2, excl.	40.8 to 81.6, excl.	3/8	1/2	9/16	5/8	5/8	1 1/16	1 1/16	1 1/16	3/4	1 1/4	1 3/4
2 to 4, excl.	81.6	5/16	3/8	7/16	1/2	1/2	9/16	9/16	5/8	3/4	1	1 1/4
4 to 6, excl.	...	3/8	7/16	1/2	9/16	5/8	5/8	3/4	7/8	1	1	1
6 to 8, excl.	...	7/16	1/2	9/16	1 1/16	3/4	7/8	1 5/16	1	1	1	1
8 to 10, excl.	...	1/2	9/16	1 1/16	3/4	7/8	1	1	1	1	1	1
10 to 12, excl.	...	9/16	3/4	7/8	1	1	1	1	1	1	1	1
12 to 15, incl.	...	1 1/16	1 5/16	7/8	1	1	1	1	1	1	1	...

[a] *Flatness Variations for Length.*—The longer dimension specified is considered the length, and permissible variations in flatness along the length should not exceed the tabular amount for the specified width in plates up to 12 ft in length, or in any 12 ft of longer plates.

NOTE 1.—When the longer dimension is under 36 in., the permissible variation should not exceed ¼ in.

NOTE 2.—The permissible variations given in the above table apply to plates which have a specified minimum tensile strength of not more than 60,000 psi, or compatible chemistry or hardness. For plates specified to a higher minimum tensile strength or compatible chemistry or hardness, the limits given in the table are increased to 1½ times the amounts in the above table.

NOTE 3.—The above table and notes cover the permissible variations for flatness of circular and sketch plates, based on the maximum dimensions of those plates.

TABLE XII.—PERMISSIBLE VARIATIONS IN CROSS-SECTION FOR STANDARD BEAMS, STANDARD MILL H BEAMS, AND CHANNELS.

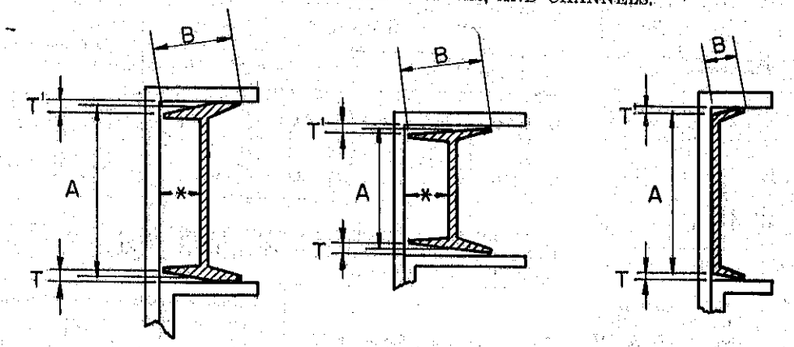

* Back of square and centerline of web to be parallel when measuring "out-of-square."

$T + T'$ applies when flanges of channels are toed in or out.

Section	Nominal Size, in.	*A*, Depth, in.[a] Over Theoretical	*A*, Depth, in.[a] Under Theoretical	*B*, Flange Width, in. Over Theoretical	*B*, Flange Width, in. Under Theoretical	$T + T'$, Out of Square per Inch of *B*, in.
Standard beams	3 to 7, incl.	3/32	1/16	1/8	1/8	1/32
	Over 7 to 14, incl.	1/8	3/32	5/32	5/32	1/32
	Over 14 to 24, incl.	5/16	1/8	5/16	5/16	1/32
Standard mill H-Beams	4	3/32	1/16	1/8	1/8	1/32
	5	3/32	1/16	5/32	5/32	1/32
	6 and 8	1/8	3/32	5/16	5/16	1/32
Channels	3 to 7, incl.	3/32	1/16	1/8	1/8	1/32
	Over 7 to 14, incl.	1/8	3/32	1/8	5/32	1/32
	Over 14	5/16	1/8	1/8	5/16	1/32

[a] *A* is measured at center line of web for beams; and at back of web for channels.

TABLE XIII.—PERMISSIBLE VARIATIONS IN CROSS-SECTION FOR ANGLES, BULB ANGLES, ROLLED TEES, AND ZEES.

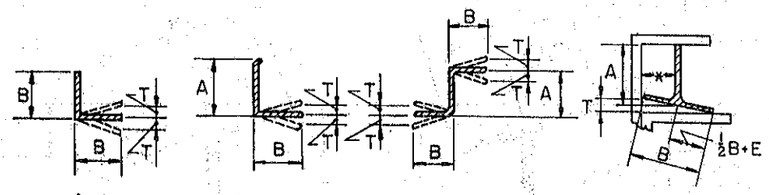

* Back of square and center line of stem to be parallel when measuring "out-of-square."

Section	Nominal Size, in.	*A*, Depth, in. Over Theoretical	*A*, Depth, in. Under Theoretical	*B*, Flange Width, or Length of Leg, in. Over Theoretical	*B*, Flange Width, or Length of Leg, in. Under Theoretical	*T*, Out of Square per Inch of *B*, in.	*E*, Web off Center, max in.
Angles[a]	3 to 4, incl.	...	...	1/16	3/32	3/128[b]	...
	Over 4 to 6, incl.	...	...	1/8	1/8	3/128[b]	...
	Over 6	...	...	3/16	1/8	3/128[b]	...
Bulb angles	(Depth) 3 to 4, incl.	1/8	1/16	1/8	3/32	3/128[b]	...
	Over 4 to 6, incl.	1/8	1/16	1/8	1/8	3/128[b]	...
	Over 6	1/8	1/16	3/16	1/8	3/128[b]	...
Rolled tees	(Stem or Flange) 5 and under	3/32	1/16	1/8	1/8	1/32	3/32
	(Stem or Flange) over 5 to 7, incl.	3/32	1/16	1/8	1/8	1/32	1/8
Zees	3 to 4, incl.	1/8	1/16	1/8	1/16	3/128[b]	...
	Over 4 to 6, incl.	1/8	1/16	1/8	1/8	3/128[b]	...

[a] For unequal leg angles, longer leg determines classification.

[b] 3/128 in. per in. = 1½ deg.

TABLE XIV.—PERMISSIBLE VARIATIONS IN LENGTH FOR STANDARD SHAPES.

	Variations from Specified Length for Lengths Given, in.									
	To 30 ft, incl.		Over 30 to 40 ft, incl.		Over 40 to 50 ft, incl.		Over 50 to 65 ft, incl.		Over 65 ft.	
	Over	Under	Over	Under	Over	Under	Over	Under	Over	Under
All standard shapes	1/2	1/4	3/4	1/4	1	1/4	1 1/8	1/4	1 1/4	1/4

TABLE XV.—PERMISSIBLE VARIATIONS IN ENDS OUT-OF-SQUARE FOR STANDARD SHAPES.

Shapes	Permissible Variations
Standard beams, channels; Standard mill H-beams	1/64 in. per inch of depth
Angles[a]	3/128 in. per inch of leg length or 1½ deg
Bulb angles	3/128 in. per inch of depth or 1½ deg
Rolled tees[a]	1/64 in. per inch of flange or stem
Zees	3/128 in. per inch of sum of both flange lengths

[a] Permissible variations for ends out-of-square are determined on the longer members of the shape.

TABLE XVI.—PERMISSIBLE VARIATIONS IN STRAIGHTNESS FOR STANDARD SHAPES.

	Permissible Variations
Camber	1/8 in. × (number of feet of total length / 5)
Sweep	Due to the extreme variations in flexibility of standard beams and channels about the Y-Y or 2-2 axis, straightness tolerances are subject to negotiations between the manufacturer and the purchaser for the individual sections involved.

TABLE XVII.—PERMISSIBLE VARIATIONS IN CROSS-SECTION FOR WIDE FLANGE SHAPES.

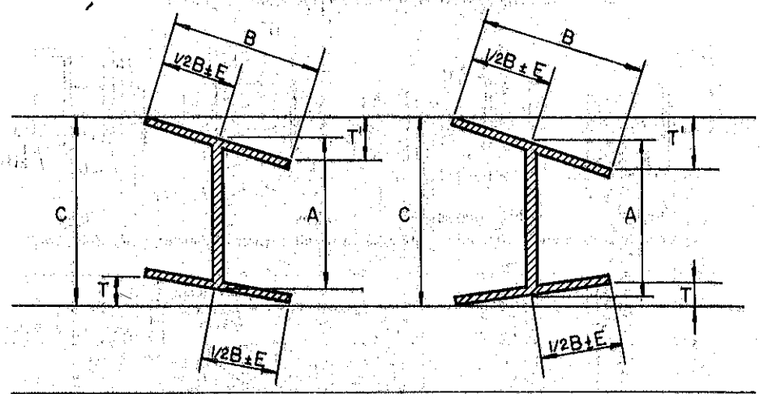

Section Nominal Size, in.	A, Depth, in.		B, Flange Width, in.		T + T', Flanges Out of Square, max, in.	E, Web off Center, max, in.	C, Maximum Depth at any Cross-Section over Theoretical Depth, in.
	Over Theoretical	Under Theoretical	Over Theoretical	Under Theoretical			
Up to 12, incl.	1/8	1/8	1/4	3/16	1/4	3/16	1/4
Over 12	1/8	1/8	1/4	3/16	5/16	3/16	1/4

A is measured at center line of web.
B is measured parallel to flange.
C is measured parallel to web.

TABLE XVIII.—PERMISSIBLE VARIATIONS IN LENGTH FOR WIDE FLANGE SHAPES.[a, b]

Wide Flange Shapes	Variations from Specified Length for Lengths Given, in.			
	30 ft and under		Over 30 ft.	
	Over	Under	Over	Under
Beams 24 in. and under in nominal depth	3/8	3/8	3/8 plus 1/16 for each additional 5 ft or fraction thereof	3/8
Beams over 24 in. in nominal depth and all columns	1/2	1/2	1/2 plus 1/16 for each additional 5 ft or fraction thereof	1/2

[a] When wide flange shapes are used as bearing piles, the length tolerance is plus 5 in. and minus 0 in.
[b] The ends out-of-square tolerance for wide flange shapes shall be 1/64 in. per in. of depth, or of flange width if it is greater than the depth.

TABLE XIX.—PERMISSIBLE VARIATIONS IN STRAIGHTNESS FOR WIDE FLANGE SHAPES.

Wide Flange Shapes	Permissible Variation
Camber and sweep	1/8 in. × number of feet of total length[c] / 10
When certain sections[b] with a flange width approximately equal to depth are specified on order as columns:	
Lengths of 45 ft and under	1/8 in. × number of feet of total length / 10 but not over 3/8 in.
Lengths over 45 ft	3/8 in. + 1/8 in. × number of feet of total length − 45 / 10

[c] Sections with a flange width less than 6 in., tolerance for sweep

$$\frac{1}{8}\text{ in.} \times \frac{\text{number of feet of total length.}}{5}$$

[b] Applies only to:
8-in. deep sections 31 lb per ft and heavier,
10-in. deep sections 49 lb per ft and heavier,
12-in. deep sections 65 lb per ft and heavier, and
14-in. deep sections 78 lb per ft and heavier.
If other sections are specified on the order as columns, the tolerance will be subject to negotiation with the manufacturer.

TABLE XX.—PERMISSIBLE VARIATIONS IN DIMENSIONS FOR SPLIT TEES AND ANGLES.[a]

Specified Depth, in.	Variations from Depth,[b] Over and Under, in.
To 6, excl (beams and channels)	1/8
6 to 16, excl (beams and channels)	3/16
16 to 20, excl (beams and channels)	1/4
20 to 24, excl (beams)	5/16
24 and over (beams)	3/8

[a] The length tolerance for split tees or angles are the same as those applicable to the section from which the tees or angles are split.
[b] The above tolerances for depth of tees or angles include the allowable tolerances in depth for the beams or channels before splitting. Tolerances both for dimensions and straightness, as set up for the beams or channels from which these tees or angles are cut, will apply, except

$$\text{straightness} = \frac{1}{8}\text{ in.} \times \frac{\text{length in feet}}{5}$$

TABLE XXI.—PERMISSIBLE VARIATIONS IN SECTIONAL DIMENSIONS FOR STANDARD BAR-SIZE ANGLES.

Specified Length of Leg, in.	Variations from Thickness for Thicknesses Given, Over and Under, in.			Variations from Length of Leg, Over and Under, in.
	3/16 and under	Over 3/16 to 3/8, incl.	Over 3/8	
1 and under	0.008	0.010	...	1/32
Over 1 to 2, incl.	0.010	0.010	0.012	3/64
Over 2 to 3, excl.	0.012	0.015	0.015	1/16

NOTE 1.—The longer leg of an unequal angle determines the size for permissible variations.
NOTE 2.—Permissible out-of-square in either direction, 1½ deg.

TABLE XXII.—PERMISSIBLE VARIATIONS IN SECTIONAL DIMENSIONS FOR STANDARD BAR-SIZE CHANNELS.

Specified Size of Channel, in.	Variations from Size, Over and Under, in.				Permissible Out-of-Square[a] of Either Flange per Inch of Flange Width, in.
	Depth of Section	Width of Flanges	Thickness of Web for Thicknesses Given		
			3/16 and under	Over 3/16	
1½ and under	1/32	1/32	0.010	0.015	1/32
Over 1½ to 3, excl.	1/16	1/16	0.015	0.020	1/32

[a] For channels 5/8-in. and under in depth, the permissible out-of-square is 3/64 in. per inch of depth.
NOTE.—Measurements for depth of shape and width of flanges are overall.

TABLE XXIII.—PERMISSIBLE VARIATIONS IN SECTIONAL DIMENSIONS FOR STANDARD BAR-SIZE TEES.

Specified Size of Tee, in.	Width or Depth, in.		Thickness of Flange, in.		Thickness of Stem, in.		Stem Out-of-Square in.[a]
	Over	Under	Over	Under	Over	Under	
1¼ and under	3/64	3/64	0.010	0.010	0.005	0.020	1/32
Over 1¼ to 2, incl.	1/16	1/16	0.012	0.012	0.010	0.020	1/16
Over 2 to 3, excl.	3/32	3/32	0.015	0.015	0.015	0.020	3/32

[a] Stem out-of-square is the variation from its true position of the center line of stem, measured at the point.
NOTE 1.—The longer member of an unequal tee determines the size for permissible variations.
NOTE 2.—Measurements for both width and depth are overall.

TABLE XXIV.—PERMISSIBLE VARIATIONS IN SECTIONAL DIMENSIONS FOR SQUARE-EDGE AND ROUND-EDGE FLAT BARS.

Specified Width, in.[a]	Variations from Thickness, for Thicknesses Given, Over and Under, in.					Variations from Width, in.	
	Under ¼	¼ to ½, incl.	Over ½ to 1 incl.	Over 1 to 2, incl.	Over 2	Over	Under
1 and under	0.007	0.008	0.010	...	...	1/64	1/64
Over 1 to 2, incl.	0.007	0.012	0.015	1/32	...	1/32	1/32
Over 2 to 4, incl.	0.008	0.015	0.020	1/32	3/64	1/16	1/32
Over 4 to 6, incl.	0.009	0.015	0.020	1/32	1/16	3/32	1/16

[a] For permissible variations for flats over 6 to 8 in., incl, in width the manufacturer should be consulted.

TABLE XXV.—PERMISSIBLE VARIATIONS IN SECTIONAL DIMENSIONS FOR ROUND AND SQUARE BARS AND ROUND-CORNERED SQUARES.

Specified Size, in.	Variations from Size, in.		Out-of-Round or-Square in.,
	Over	Under	
5/16 and under	0.005	0.005	0.008
Over 5/16 to 7/16, incl.	0.006	0.006	0.009
Over 7/16 to 5/8, incl.	0.007	0.007	0.010
Over 5/8 to 7/8, incl.	0.008	0.008	0.012
Over 7/8 to 1, incl.	0.009	0.009	0.013
Over 1 to 1⅛, incl.	0.010	0.010	0.015
Over 1⅛ to 1¼, incl.	0.011	0.011	0.016
Over 1¼ to 1⅜, incl.	0.012	0.012	0.018
Over 1⅜ to 1½, incl.	0.014	0.014	0.021
Over 1½ to 2, incl.	1/64	1/64	0.023
Over 2 to 2½, incl.	1/32	0	0.023
Over 2½ to 3½, incl.	3/64	0	0.035
Over 3½ to 4½, incl.	1/16	0	0.046
Over 4½ to 5½, incl.	5/64	0	0.058
Over 5½ to 6½, incl.	1/8	0	0.070
Over 6½ to 8¼, incl.	5/32	0	0.085

NOTE.—Out-of-round is the difference between the maximum and minimum diameters of the bar, measured at the same cross-section. Out-of-square is the difference in the two dimensions at the same cross-section of a square bar, each dimension being the distance between opposite faces.

TABLE XXVI.—PERMISSIBLE VARIATIONS IN SECTIONAL DIMENSIONS FOR HEXAGONS.

Specified Sizes Between Opposite Sides, in.	Variation from Size, in.		Maximum Difference, Three Measurements, in.[a]
	Over	Under	
½ and under	0.007	0.007	0.011
Over ½ to 1, incl.	0.010	0.010	0.015
Over 1 to 1½, incl.	0.021	0.013	0.025
Over 1½ to 2, incl.	1/32	1/64	1/32
Over 2 to 2½, incl.	3/64	1/64	3/64
Over 2½ to 3½, incl.	1/16	1/64	1/16

[a] Greatest difference between any two of the three possible measurements.

TABLE XXVII.—PERMISSIBLE VARIATIONS IN SECTIONAL DIMENSIONS FOR HALF-ROUNDS, OVALS, AND OTHER SPECIAL BAR-SIZE SHAPES.

Permissible variations in half-rounds, ovals, and other special bar size shapes not included in the foregoing tables are subject to individual negotiation.

TABLE XXVIII.—PERMISSIBLE VARIATIONS IN STRAIGHTNESS FOR BARS AND BAR-SIZE SHAPES.

	Maximum Permissible Variation in Straightness, in.
Bars and bar-size shapes[a]	¼ in any 5 ft or ¼ × (number of feet of total length / 5)

[a] Permissible variations in straightness do not apply to hot-rolled bars if any subsequent heating operation has been performed.

TABLE XXIX.—PERMISSIBLE VARIATIONS IN LENGTH FOR HOT CUT CARBON STEEL BARS.

Specified Size of Rounds, Squares and Hexagons, in.	Specified Size of Flats, in.		Permissible Variations Over Specified Length Given in Feet, in. (No Variation Under)				
	Thickness	Width[b]	5 to 10, excl.	10 to 20, excl.	20 to 30, excl.	30 to 40, excl.	40 to 60, incl.
Hot Shearing							
1 and under	1 and under	3 and under	½	¾	1¼	1¾	2¼
Over 1 to 2, incl.	Over 1	3 and under	⅝	1	1½	2	2½
Over 1 to 2, incl.	1 and under	Over 3 to 6, incl.	⅝	1	1½	2	2½
Over 2 to 5, incl.	Over 1	Over 3 to 6, incl.	1	1½	1¾	2¼	2¾
Over 5	...	...	2	2½	2¾	3	3¼
Other sections	...	...	⅝	1	1½	2	2½
Hot Sawing							
2 to 5, incl.[a]	1 and over	3 and over	[a]	1½	1¾	2¼	2¾
Over 5	...	...	[a]	2½	2¾	3	3¼

[a] Smaller sizes and shorter lengths are not commonly hot sawed.

[b] For permissible variations for flats over 6 to 8 in., incl, in width the manufacturer should be consulted.

SPECIFICATION FOR GENERAL REQUIREMENTS FOR DELIVERY OF ROLLED STEEL PLATES OF FLANGE AND FIREBOX QUALITIES

SA-20

(IDENTICAL WITH ASTM SPECIFICATION A 20-59)

Scope

1. (*a*) This specification covers a group of common requirements which, unless otherwise specified in the purchase order or in an individual specification, shall apply to rolled steel plates of flange and firebox qualities under each of the following specifications issued by the American Society for Testing Materials:

Title of Specification	ASTM Designation[a]
Boiler and Firebox Steel for Locomotives	A 30
Open-Hearth Iron Plates of Flange Quality	A 129
Carbon-Silicon Steel Plate of Intermediate Tensile Ranges for Fusion-Welded Boilers and Other Pressure Vessels	A 201
Chromium-Manganese-Silicon (CMS) Alloy-Steel Plates for Boilers and Other Pressure Vessels	A 202
Nickel-Steel Plates for Boilers and Other Pressure Vessels	A 203
Molybdenum-Steel Plates for Boilers and Other Pressure Vessels	A 204
High Tensile Strength Carbon-Silicon Steel Plates for Boilers and Other Pressure Vessels	A 212
Manganese-Vanadium Steel Plates for Boilers and Other Pressure Vessels	A 225
Low and Intermediate Tensile Strength Carbon-Steel Plates of Flange and Firebox Qualities (Plates 2 in. and Under in Thickness)	A 285
High Tensile Strength Carbon-Manganese-Silicon Steel Plates for Boilers and Other Pressure Vessels	A 299
Steel Plates for Pressure Vessels for Service at Low Temperatures	A 300
Manganese-Molybdenum Steel Plates for Boilers and Other Pressure Vessels	A 302
Low-Carbon, High-Nickel Steel Plate for Pressure Vessels	A 353
Chromium-Molybdenum Steel Plates for Boilers and Other Pressure Vessels	A 387
Chromium-Copper-Nickel-Aluminum Alloy Steel Plates for Pressure Vessels	A 410

[a] These designations refer to the latest issue of the respective specification.

(*b*) In case of any conflict in requirements, the requirements of the purchase order, the individual material specification, and this general specification shall prevail in the sequence named.

Ladle Analysis

2. An analysis of each heat of open-hearth or electric-furnace steel shall be made by the manufacturer to determine the percentages of carbon, manganese, phosphorus and sulfur; of copper when copper steel is specified; and of any other elements specified or restricted by the applicable specification. This analysis shall be made from a test ingot taken during the pouring of the heat. The chemical composition thus determined shall be reported to the purchaser or his representative, and shall conform to the applicable material specification as to elements required or restricted.

Check Analysis

3. An analysis may be made by the purchaser from a broken tension test specimen representing each plate as rolled. The chemical composition thus determined shall conform to the applicable material specification as to elements required or restricted.

Homogeneity Test

4. (*a*) The object of the homogeneity test, which is required for firebox steel only, is to open and render visible to the eye any seams due to failure to weld up or to interposed foreign matter, or any cavities due to gas bubbles in the ingot. The fractured surface of the test specimen shall not show any single seam or cavity greater in length than the following, in any of the fractures obtained in accordance with Paragraph (*b*):

Plate Thickness, in.	Maximum Length of Single Seam or Cavity, in.
Up to ½, incl.	¼
Over ½ to 4, incl.	⅜
Over 4 to 6, incl.	½
Over 6 to 12, incl.	¾

Each fracture shall be examined and the lengths of the seams and cavities determined, a pocket lens being used if necessary.

(*b*) The test may be made on a broken tension test specimen when an 8-in. gage length specimen is used. For plates over 2 in. in thickness, the specimen shall be taken adjacent, sidewise, or lengthwise, to the top tension test specimen. For plates ¾ in. and under in thickness, the specimen shall be nicked or grooved transversely, in three places, about 1/16 in. deep. The first groove shall be 2 in. from the square end, and each succeeding groove on the opposite side about 2 in. from the preceding one. For plates over ¾ to 2⅛ in., inclusive, in thickness the specimen may be grooved about ⅛ in. deep, at one place on one side. For plates over 2⅛ in. in thickness the specimen may be grooved at one place on both sides to leave a fracture which will include the horizontal axis of the plate and have a face at least 2 in. in depth. The specimen shall be broken at each groove with a hammer or press. Where the press will not break the large specimen, the specimen may be split with a gas flame or by machining, and each section broken and examined.

Test Specimens

5. The test specimens shall be selected

and prepared as prescribed in the following Paragraphs (*a*) to (*e*), inclusive.

(*a*) Tension test specimens for firebox steel shall be taken from the top and bottom corners of the plate as rolled (Note), parallel to its longitudinal axis, and for flange steel from the bottom corner of the plate only. Bend test specimens shall be taken from the middle of the top of the plate as rolled, at right angles to its longitudinal axis.

NOTE.—The term "plate as rolled" when used in this specification refers to the unit plate rolled from a slab or directly from an ingot in its relation to the location of specimens, not to its condition.

(*b*) For plates 1½ in. and under in thickness, tension and bend test specimens shall be the full thickness of the material, and shall be machined to the form and dimensions shown in Fig. 1; or with both edges parallel.

(*c*) For plates up to 4 in., inclusive, in thickness, tension test specimens may be the full thickness of the material and of the form shown in Fig. 1, when adequate testing machine capacity is available.

(*d*) For plates over 1½ in. in thickness, except as permitted in Paragraph (*c*), tension test specimens shall be machined to the form and dimensions shown in Fig. 2; and the axis of each such specimen shall be located midway between the center and the top or bottom surface of the plate. The bend test specimens shall be at least 1½ in. in width; with both edges parallel, and may be reduced to 2 in. in thickness; but shall have one surface as rolled.

(*e*) The sides of the bend test specimens may have the corners rounded to a radius not over $\frac{1}{16}$ in. for plates 2 in. and under in thickness, and not over $\frac{1}{8}$ in. for plates over 2 in. in thickness.

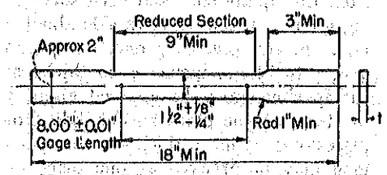

NOTE 1.—When necessary, it is permissible to use a narrower specimen but in such a case the reduced portion shall be not less than 1 in. in width.

NOTE 2.—The dimension "*t*" is the thickness of the test specimen as provided for in the applicable material specifications.

NOTE 3.—The reduced section shall be parallel within 0.010 in. and may have a gradual taper in width from the ends toward the center with the ends not more than 0.010 in. wider than the center.

NOTE 4.—The ends of the specimen shall be symmetrical with the center line of the reduced section within 0.10 in.

FIG. 1.—Standard Rectangular Tension Test Specimen with 8-in. Gage Length.

Methods of Testing

6. All tests shall be conducted in accordance with the Tentative Methods and Definitions for the Mechanical Testing of Steel Products (ASTM Designation: A 370).

Permissible Variations in Dimensions or Weight

7. (*a*) One cubic inch of rolled steel shall be assumed to weigh 0.2833 lb.

(*b*) For carbon-steel plates the permissible variations for dimensions and weight shall not exceed the applicable limits stated in Tables I to X, inclusive.

(*c*) For alloy-steel plates the permissible variations for dimensions and weight shall not exceed the applicable limits stated in Tables I, II, V, VIII, IX, and XI to XVI, inclusive.

Defects

8. (*a*) The material shall be free from injurious defects and shall have a workmanlike finish.

(*b*) Plates not intended for riveted construction (Paragraph (*c*)) may be conditioned by the manufacturer for the removal of surface imperfections or depressions on either surface by grinding, provided the ground area is well flared and grinding does not reduce the thickness of the plate as rolled below the permissible minimum thickness in inches.

(*c*) On plates intended for riveted construction the conditioning privilege described in Paragraph (*b*) does not apply unless agreed upon between the manufacturer and the purchaser.

Marking

9. (*a*) Except as specified in Paragraph (*b*), the name or brand of the manufacturer, manufacturer's test identification, class, and minimum of the range of the tensile strength specified for the grade ordered, shall be legibly stamped on each finished plate in two places not less than 12 in. from the edges and on each butt strap near the center line not less than 12 in. from each end. Plates, the maximum lengthwise and crosswise dimensions of which do not exceed 72 in., shall have the marking stamped in one place approximately midway between the center and an edge. The manufacturer's test identification number shall be legibly stamped on each test specimen.

(*b*) For plates under ¼ in. in thickness, the marking specified in Paragraphs (*a*) and (*d*) shall be legibly stenciled instead of stamped.

(*c*) Alloy-steel plates, in addition to and in accordance with the requirements set forth in Paragraphs (*a*) and (*b*), shall also be stamped or stenciled, depending on ordered thickness, with letters identifying the type of alloy furnished; the required letters shall be as stated in the individual specification.

(*d*) Except as specified in Paragraph (*b*), when ordered for railroad service in either locomotive or stationary boilers, each plate shall be stamped with the customer's special identification serial number as indicated on the order or by the customer's representative when present at the time the serial numbers are applied; in addition, the plates shall be match-marked as defined in Paragraphs (*e*), (*f*), and (*g*) so that test specimens representing them may be identified. When more than one plate is cut from an as-rolled plate, each plate shall be match-marked so that they all may be identified with the test specimen representing them.

(*e*) Each match-mark shall consist of two overlapping circles each not less than

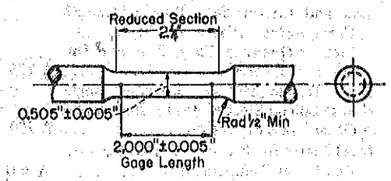

NOTE 1.—The gage length and fillets shall be as shown, but the ends may be of any shape to fit the holders of the testing machine in such a way that the load shall be axial.

NOTE 2.—The reduced section may have a gradual taper from the ends toward the center, with the ends not more than 0.005 in. larger in diameter than the center.

FIG. 2.—Standard Round Tension Test Specimen with 2-in. Gage Length.

1½ in. in diameter, placed upon shear lines, and made by separate impressions of a single circle steel die,—except as specified in Paragraph (*b*).

(*f*) Match-marked coupons, except as provided in Paragraph (*g*), shall match with the plates represented and only those which match-mark properly shall be accepted.

(*g*) When arranged with the manufacturer for plates rolled on mills with rotary side and automatic end shears, and for plates necessitating flame cutting because of thickness or circular plates, making match-marking impracticable, the manufacturer shall furnish an affidavit, in lieu of the match-marking requirement, stating that the test coupons are representative of the plates and patterns cut from the material as indicated. If the plan of furnishing an affidavit is not satisfactory, the manufacturer and purchaser may mutually agree on some other method of test piece identification.

Inspection and Testing

10. The inspector representing the purchaser shall have free entry at all times while work on the contract of the purchaser is being performed, to all parts of the manufacturer's works that concern the manufacture of the material ordered. The manufacturer shall afford the inspector all reasonable facilities, without charge, to satisfy him that the material is being furnished in accordance with this specification. All tests (except check analysis) and inspection shall be made at the place of manufacture prior to shipment, unless otherwise specified, and shall be so conducted as not to interfere unnecessarily with the operation of the works.

Retests

11. (*a*) If any test specimen shows defective machining or develops flaws, it may be discarded and another specimen substituted.

(*b*) If the percentage of elongation of any tension test specimen is less than that specified and any part of the fracture is more than ¾ in. from the center of the gage length of a 2-in. specimen or is outside the middle half of the gage length of an 8-in. specimen, as indicated by scribe scratches marked on the specimen before testing, a retest shall be allowed.

(*c*) If a bend test specimen fails, due to conditions of bending more severe than required by the specification, a retest shall be permitted, either on a duplicate specimen or on a remaining portion of the failed specimen.

Rejection

12. (*a*) Unless otherwise specified, any rejection based on check analysis made in accordance with the material specification shall be reported to the manufacturer within five working days from receipt of samples by the purchaser.

(*b*) Samples that represent rejected material shall be preserved for two weeks from the date of the test report. In case of dissatisfaction with the results of the tests, the manufacturer may make claim for a rehearing within that time.

(*c*) Material that shows injurious defects subsequent to its acceptance at the manufacturer's works will be rejected, and the manufacturer shall be notified.

TOLERANCE TABLES

The following tolerance tables are applicable to this specification:

TABLE I.—PERMISSIBLE VARIATIONS IN THICKNESS AND WEIGHT FOR RECTANGULAR SHEARED PLATES AND UNIVERSAL MILL CARBON- AND ALLOY-STEEL PLATES 2 IN. AND UNDER IN THICKNESS WHEN ORDERED TO THICKNESS.

Specified Thickness, in.	Permissible Excess in Average Weight of Lots[a] for Widths Given in Inches, Expressed in Percentages of Nominal Weights										
	48 and under	Over 48 to 60, excl.	60 to 72, excl.	72 to 84, excl.	84 to 96, excl.	96 to 108, excl.	108 to 120, excl.	120 to 132, excl.	132 to 144, excl.	144 to 168, excl.	168 and over
To ½, excl.	7.0	8.0	9.0	10	12	14	16	18	21	...	...
½ to ⅝, excl.	6.0	7.0	8.0	9.0	10	12	14	16	19	...	...
⅝ to ¾, excl.	5.0	6.0	7.0	8.0	9.0	10	12	14	17	18	...
¾ to ⅞, excl.	4.5	5.0	6.0	7.0	8.0	9.0	10	12	15	16	18
⅞ to 1, excl.	4.0	4.5	5.0	6.0	7.0	8.0	9.0	10	13	14	16
1 to 1¼, excl.	4.0	4.0	4.5	5.0	6.0	7.0	8.0	9.0	11	12	14
1¼ to 1½, excl.	4.0	4.0	4.0	4.5	5.0	6.0	7.0	8.0	9.0	10	12
1½ to 1¾, excl.	3.5	4.0	4.0	4.0	4.5	5.0	6.0	7.0	8.0	9.0	11
1¾ to 2, incl.	3.5	3.5	4.0	4.0	4.0	4.5	5.0	6.0	7.0	8.0	9.0

[a] The term "lot" means all the plates of each tabular width and thickness group represented in each shipment.

NOTE 1.—Permissible variation under specified thickness, 0.01 in.

NOTE 2.—Permissible overweight for circular and sketch plates shall be 25 per cent greater than the amounts given in the above table.

NOTE 3.—Permissible variations in overweight for single plates shall be 1½ times the amounts indicated above.

NOTE 4.—The adopted standard density for rolled steel is 0.2833 lb. per cu. in.

TABLE II.—PERMISSIBLE VARIATIONS IN THICKNESS FOR RECTANGULAR PLATES AND UNIVERSAL MILL CARBON AND ALLOY-STEEL PLATES OVER 2 IN. IN THICKNESS.

Specified Thickness, in.	Variations Over Specified Thickness for Widths Given, in.					
	To 36, excl	36 to 60, excl	60 to 84, excl	84 to 120, excl	120 to 132, excl	132 and over
Over 2 to 3, excl	1/16	3/32	1/8	1/8	1/8	3/16
3 to 4, excl	3/32	1/8	1/8	1/8	1/8	3/16
4 to 6, excl	3/32	1/8	1/8	1/8	5/32	11/64
6 to 8, excl	1/8	1/8	5/32	5/32	11/64	...
8 to 10, excl	...	1/8	5/32	5/32	...	...
10 to 12, excl	...	3/16	11/64	11/64	...	...
12 to 15, incl	...	1/4	1/4	...	...	...

NOTE 1.—Permissible variation under specified thickness, 0.01 in.

TABLE III.—PERMISSIBLE VARIATIONS IN WIDTH AND LENGTH FOR SHEARED CARBON-STEEL PLATES 1½ IN. AND UNDER IN THICKNESS; LENGTH ONLY OF UNIVERSAL MILL CARBON-STEEL PLATES 2½ IN. AND UNDER IN THICKNESS.

Specified Dimensions, in.		Variations over Specified Width and Length for Thicknesses, in., Given							
		To 5/16, excl.		5/16 to 5/8, excl.		5/8 to 1, excl.		1 to 2, incl.[a]	
Length	Width	Width	Length	Width	Length	Width	Length	Width	Length
To 120, excl.	To 60, excl.	3/16	1/8	3/16	3/16	3/16	3/16	3/16	1
	60 to 84, excl.	3/16	1/8	1/4	11/64	3/16	1/4	1/4	1
	84 to 108, excl.	1/4	1/8	1/4	1/8	1/4	1	1	1 1/16
	108 and over	5/16	1/8	1/4	1	1/4	1 1/16	1 1/16	1 1/16
120 to 240, excl.	To 60, excl.	3/16	3/16	1/4	7/16	3/16	1	3/16	1 1/16
	60 to 84, excl.	1/4	3/16	1/4	1/4	1/4	1	1/4	1 1/16
	84 to 108, excl.	1/4	3/16	1/4	11/64	1/4	1 1/16	1	1 1/16
	108 and over	5/16	1	1/4	1 1/16	1/4	1 1/16	1 1/16	1 1/16
240 to 360, excl.	To 60, excl.	3/16	1	1/4	1 1/16	3/16	1	3/16	1 1/16
	60 to 84, excl.	1/4	1	1/4	1 1/16	1/4	1 1/16	1/4	1 1/16
	84 to 108, excl.	1/4	1	1/4	1 1/16	1/4	1 1/16	1/4	1 1/16
	108 and over	11/64	1 1/16	5/16	1 1/16	1	1 1/16	1 1/16	1 1/16
360 to 480, excl.	To 60, excl.	7/16	1 1/16	1/4	1 1/16	3/16	1 1/16	3/16	1 1/16
	60 to 84, excl.	7/16	1 1/16	1/4	1 1/16	1/4	1 1/16	1/4	1 1/16
	84 to 108, excl.	7/16	1 1/16	1/4	1 1/16	1/4	1 1/16	1/4	1 1/16
	108 and over	7/16	1 1/16	5/16	1 1/16	1/4	1 1/16	1/4	1 1/16
480 to 600, excl.	To 60, excl.	7/16	1 1/16	1/4	1 1/16	3/16	1 1/16	3/16	1 1/16
	60 to 84, excl.	7/16	1 1/16	1/4	1 1/16	1/4	1 1/16	1/4	1 1/16
	84 to 108, excl.	7/16	1 1/16	1/4	1 1/16	1/4	1 1/16	1/4	1 1/16
	108 and over	7/16	1 1/16	5/16	1 1/16	1/4	1 1/16	1/4	1 1/16
600 to 720, excl.	To 60, excl.	7/16	1 1/16	1/4	1 1/16	3/16	1 1/16	7/16	2 1/16
	60 to 84, excl.	7/16	1 1/16	1/4	1 1/16	1/4	1 1/16	1/4	2 1/16
	84 to 108, excl.	7/16	1 1/16	1/4	1 1/16	1/4	1 1/16	1/4	2 1/16
	108 and over	7/16	1 1/16	1	2	1 1/16	2 1/16	1/4	2 1/16
720 and over	To 60, excl.	1/4	2	1/4	2 1/16	1/16	2 1/16	1	2 1/16
	60 to 84, excl.	1/4	2	1/4	2 1/16	1	2 1/16	1 1/16	2 1/16
	84 to 108, excl.	1/4	2	1/4	2 1/16	1	2 1/16	1 1/16	2 1/16
	108 and over	1	2	1 1/16	2 1/16	1 1/16	2 1/16	1 1/16	3

[a] Permissible variations in length apply also to Universal Mill plates up to 12 in. in width for thicknesses over 2 to 2½ in., incl.

NOTE.—Permissible variation under specified width and length, ¼ in.

TABLE IV.—PERMISSIBLE VARIATIONS IN ROLLED WIDTH FOR UNIVERSAL MILL CARBON-STEEL PLATES 15 IN. AND UNDER IN THICKNESS.

Specified Width, in.	Variations Over Specified Width for Thicknesses Given, in.					
	To 5/16, excl.	5/16 to 5/8, excl.	5/8 to 1, excl.	1 to 2, incl.	Over 2 to 10, incl.	Over 10 to 15, incl.
Over 6 to 20, excl.	1/8	3/16	5/16	1/4	5/16	1/2
20 to 36, excl.	5/16	1/4	5/16	5/16	5/16	5/8
36 and over	5/16	5/16	5/16	5/16	5/16	5/8

NOTE.—Permissible variation under specified width shall be 5/16 in.

TABLE V.—PERMISSIBLE VARIATIONS IN DIAMETER FOR SHEARED CIRCULAR CARBON AND ALLOY-STEEL PLATES 1 IN. AND UNDER IN THICKNESS.

Specified Diameter, in.	Permissible Variations Over Specified Diameter for Thicknesses Given, in.		
	To 5/16, excl.	5/16 to 5/8, excl.	5/8 to 1, incl.
To 32, excl	1/4	5/16	1/2
32 to 84, excl	5/16	1/2	5/8
84 to 108, excl	1/2	5/8	3/4
108 to 130, incl	5/8	3/4	7/8

NOTE.—No permissible variations under.

TABLE VI.—PERMISSIBLE VARIATIONS IN WIDTH AND LENGTH FOR RECTANGULAR CARBON-STEEL PLATES WHEN GAS CUTTING IS SPECIFIED OR REQUIRED.

Specified Thickness, in.	Variations Over for All Specified Widths or Lengths, in.
To 2, excl	1/4
2 to 4, excl	5/16
4 to 6, excl	3/8
6 to 8, excl	7/16
8 to 15, incl	1

NOTE 1.—These variations may be taken all under or divided over and under, if so specified.

NOTE 2.—Plates with universal rolled edges will be gas cut to length only.

TABLE VII.—PERMISSIBLE VARIATIONS IN DIAMETER FOR GAS CUT CIRCULAR CARBON-STEEL PLATES

Specified Diameter, in.	Variations Over Specified Diameter for Thicknesses Given, in.					
	To 1, excl.	1 to 2, excl.	2 to 4, excl.	4 to 6, excl.	6 to 8, excl.	8 to 15, incl.
To 32, excl	3/16	1/4	5/16	3/8	1/2	5/8
32 to 84, excl	1/4	5/16	3/8	7/16	5/8	1
84 to 108, excl	5/16	3/8	7/16	1/2	5/8	1 1/16
108 to 130, incl	3/8	7/16	1/2	1	1 1/16	1 1/4

NOTE.—No permissible variations under.

TABLE VIII.—PERMISSIBLE CAMBER FOR SHEARED PLATES AND UNIVERSAL MILL CARBON- AND ALLOY-STEEL PLATES 2 IN. AND UNDER IN THICKNESS.

Maximum permissible camber, in. =

$$\frac{1}{4} \text{ in.} \times \frac{\text{number of feet of length}}{5}$$

TABLE IX.—PERMISSIBLE CAMBER FOR UNIVERSAL MILL CARBON- AND ALLOY-STEEL PLATES OVER 2 IN. IN THICKNESS.

Dimension, in.		Camber for Thicknesses and Widths Given
Thickness	Width	
Over 2 to 15, incl	To 30, incl	$\frac{1}{8}$ in. × $\frac{\text{number of feet of length}}{5}$
Over 2 to 15, incl	Over 30 to 60, incl	$\frac{1}{4}$ in. × $\frac{\text{number of feet of length}}{5}$

TABLE X.—PERMISSIBLE VARIATIONS FROM FLATNESS FOR CARBON-STEEL RECTANGULAR SHEARED PLATES, UNIVERSAL MILL PLATES, AND CIRCULAR AND SKETCH PLATES.

Specified Thickness in.	Variations from a Flat Surface for Specified Widths, in.[a]										
	To 36, excl	36 to 48 excl	48 to 60, excl	60 to 72, excl	72 to 84, excl	84 to 96, excl	96 to 108, excl	108 to 120, excl	120 to 144, excl	144 to 168, excl	168 and Over
To ¼, excl	5/8	7/8	1 1/16	1 3/16	1 1/16	1 5/16	1 1/4	1 7/16	2	...	...
¼ to ½, excl	3/8	5/8	7/8	1 1/16	1 1/16	1 1/4	1 5/16	1 5/8	1 7/8	...	...
½ to ¾, excl	1/2	3/4	7/8	1	1 1/16	1 1/8	1 1/4	1 7/16	1 3/4	2	2 1/4
¾ to 1, excl	5/8	3/4	5/8	7/8	1	1 1/16	1 1/8	1 5/16	1 5/8	1 7/8	2
1 to 2, excl	5/8	3/4	5/8	7/8	1	1 1/16	1 1/8	1 5/16	1	1 1/2	2
2 to 4, excl	5/8	3/4	7/8	1	1 1/16	1 1/8	1 1/4	1 3/8	1	1 1/4	1 1/2
4 to 6, excl	5/8	7/8	1	1 1/16	1 1/8	1 1/4	1 5/16	1 7/16	1	1	1
6 to 8, excl	3/4	7/8	1 1/16	1 1/8	1 1/4	1 5/16	1 3/8	1 1/2	1	1	1
8 to 10, excl	7/8	1	1 1/8	1 1/4	1 5/16	1 3/8	1 7/16	1 1/2	1	1	1
10 to 12, excl	1	1 1/16	1 1/4	1 5/16	1 3/8	1 7/16	1 1/2	1 5/8	1	1	1
12 to 15, incl	1 1/16	1 1/8	1 5/16	1 3/8	1 7/16	1 1/2	1 5/8	1 3/4	1	1	...

[a] *Flatness Variations for Length.*—The longer dimension specified is considered the length, and variations in flatness along the length should not exceed the tabular amount for the specified width in plates up to 12 ft in length, or in any 12 ft of longer plates.

NOTE 1.—When the longer dimension is under 36 in., the variation should not exceed ¼ in.

NOTE 2.—The variations given in the above table apply to plates which have a specified maximum tensile strength of not over 72 000 psi, or equivalent hardness. For plates specified to higher tensile strength or hardness, the limits given in the table are customarily increased by 50 per cent.

NOTE 3.—The above table and notes cover the variations for flatness of circular and sketch plates, based on the maximum dimensions of those plates.

TABLE XI.—PERMISSIBLE VARIATIONS IN WIDTH AND LENGTH FOR SHEARED ALLOY-STEEL PLATES 1 IN. AND UNDER IN THICKNESS; LENGTH ONLY OF UNIVERSAL MILL ALLOY-STEEL PLATES.

Specified Dimensions, in.		Variations Over Specified Width and Length for Thicknesses Given, in.					
		To 5/16, excl.		5/16 to 5/8, excl.		5/8 to 1, excl.[a]	
Length	Width	Width	Length	Width	Length	Width	Length
To 120, excl.	To 60, excl.	3/16	1/8	1/16	5/16	1/8	3/16
	60 to 84, excl.	1/16	1/8	1/8	3/16	3/16	1/4
	84 to 108, excl.	1/8	1/4	1/8	1/4	3/16	1
	108 and over	5/16	1/4	1/4	1	1/4	1 1/16
120 to 240, excl.	To 60, excl.	1/8	1/4	1/8	1/4	1/4	1
	60 to 84, excl.	1/8	1/4	1/8	1/4	1/4	1
	84 to 108, excl.	5/16	1/4	1/8	1/4	1/4	1 1/16
	108 and over	5/16	1	1/4	1 1/16	1/4	1 1/16
240 to 360, excl.	To 60, excl.	1/8	1/16	1/4	1 1/16	1/4	1 1/16
	60 to 84, excl.	1/8	1/16	1/4	1 1/16	3/16	1 1/16
	84 to 108, excl.	1/8	1/16	1/8	1 1/16	1/8	1 1/16
	108 and over	5/16	1 1/16	1/4	1 1/16	1	1 1/16
360 to 480, excl.	To 60, excl.	1/8	1 1/16	1/4	1 1/16	5/16	1 1/16
	60 to 84, excl.	1/8	1 1/16	1/4	1 1/16	3/16	1 1/16
	84 to 108, excl.	1/8	1 1/16	1/8	1 1/16	1/8	1 1/16
	108 and over	1/4	1 1/16	1/4	1 1/16	1	1 1/16
480 to 600, excl.	To 60, excl.	1/8	1 1/16	1/4	1 1/16	5/16	1 1/16
	60 to 84, excl.	1/8	1 1/16	1/4	1 1/16	1/4	1 1/16
	84 to 108, excl.	1/8	1 1/16	1/8	1 1/16	1/8	1 1/16
	108 and over	1/4	1 1/16	1/4	1 1/16	1	1 1/16
600 to 720, excl.	To 60, excl.	1/8	1 1/16	1/4	2	1/4	2
	60 to 84, excl.	1/8	1 1/16	1/4	2	1/4	2
	84 to 108, excl.	1/8	1 1/16	1/4	2	1/4	2
	108 and over	1/4	1 1/16	1	2 1/16	1 1/16	2 1/16
720 and over	To 60, excl.	1/8	2 1/16	1/4	2 1/16	1/8	2 1/16
	60 to 84, excl.	1/4	2 1/16	1/4	2 1/16	1	2 1/16
	84 to 108, excl.	1/4	2 1/16	1/8	2 1/16	1 1/16	2 1/16
	108 and over	1	2 1/16	1 1/16	2 1/16	1 1/16	2 1/16

[a] These permissible variations for length only apply also to Universal Mill plates up to 1¼ in. in thickness, and 24 in. in width, inclusive.

NOTE 1.—Permissible variation under specified width and length, ¼ in.

TABLE XII.—PERMISSIBLE VARIATIONS IN ROLLED WIDTH FOR UNIVERSAL MILL ALLOY-STEEL PLATES 15 IN. AND UNDER IN THICKNESS.

Specified Width, in.	Variations Over Specified Width for Thickness Given, in.					
	To 5/16, excl.	5/16 to 5/8, excl.	5/8 to 1, excl.	1 to 2 incl.	Over 2 to 10, incl.	Over 10 to 15, incl.
Over 6 to 20, excl.	1/8	1/8	3/16	1/4	3/8	3/4
20 to 36, excl.	1/8	1/8	1/4	5/16	3/8	1
36 and over	5/16	5/16	1/16	1/2	1	1 1/4

NOTE.—Permissible variation under specified width shall be 1/16 in.

TABLE XIII.—PERMISSIBLE VARIATIONS IN WIDTH AND LENGTH FOR RECTANGULAR ALLOY-STEEL PLATES WHEN GAS CUTTING IS SPECIFIED OR REQUIRED.

Specified Thickness, in.	Variations Over All for Specified Widths or Lengths, in.
To 2, excl	3/4
2 to 4, excl	1
4 to 6, excl	1 1/8
6 to 8, excl	1 5/16
8 to 15, incl	1 1/2

NOTE 1.—These variations may be taken all under or divided over and under, if so specified.

NOTE 2.—Plates with universal rolled edges will be gas cut to length only.

TABLE XIV.—PERMISSIBLE VARIATIONS IN DIAMETER FOR GAS CUT CIRCULAR ALLOY-STEEL PLATES.

Specified Diameter, in.	Variations Over Specified Diameter for Thicknesses Given, in.					
	To 1, excl.	1 to 2, excl.	2 to 4, excl.	4 to 6, excl.	6 to 8, excl.	8 to 15, incl.
To 32, excl	1/4	1/8	1	1 1/16	1 1/16	1 1/16
32 to 84, excl	1/4	1/8	1 1/16	1 1/16	1 1/16	1 1/16
84 to 108, excl	3/4	1	1 1/16	1 1/16	1 1/16	1 1/16
108 to 130, incl	1/8	1 1/4	1 1/4	1 1/4	1 1/16	1 1/16

NOTE.—No permissible variations under.

TABLE XV.—PERMISSIBLE VARIATIONS FROM FLATNESS FOR ALLOY-STEEL RECTANGULAR SHEARED PLATES, UNIVERSAL MILL PLATES, AND CIRCULAR AND SKETCH PLATES.

Specified Thickness in.	Variations from a Flat Surface for Specified Widths, in.[a]										
	To 36, excl	36 to 48, excl	48 to 60, excl	60 to 72, excl	72 to 84, excl	84 to 96, excl	96 to 108, excl	108 to 120, excl	120 to 144, excl	144 to 168, excl	168 and Over
To ¼, excl	15/16	15/16	15/16	2 1/16	2 1/4	2 7/16	2 5/8	2 13/16	3	. . .	. . .
¼ to ⅜, excl	7/8	15/16	15/16	1 15/16	1 7/8	2 1/16	2 1/16	2 5/16	2 5/16	3	3 1/4
⅜ to ½, excl	3/4	7/8	1 1/16	1 1/8	1 5/16	1 1/2	1 11/16	1 7/8	2 1/16	2 5/16	3 1/8
½ to ¾, excl	11/16	7/8	15/16	1 1/16	1 1/8	1 5/16	1 1/2	1 11/16	1 15/16	2 1/8	3
¾ to 1, excl	11/16	7/8	15/16	1 1/16	1 1/16	1 1/8	1 1/4	1 7/16	1 5/8	1 13/16	2 1/4
1 to 2, excl	5/8	3/4	7/8	15/16	1 1/16	1 1/8	1 3/16	1 5/16	1 1/2	1 11/16	2 1/8
2 to 4, excl	1/2	5/8	11/16	3/4	7/8	15/16	1 1/16	1 1/8	1 5/16	1 1/2	1 7/8
4 to 6, excl	7/16	11/16	3/4	7/8	15/16	1 1/16	1 1/8	1 1/4	1 3/8	1 5/8	1 13/16
6 to 8, excl	7/16	5/8	7/8	15/16	1 1/16	1 1/8	1 1/4	1 3/8	1 1/2	1 3/4	1 15/16
8 to 10, excl	3/4	7/8	1 1/16	1 1/8	1 1/4	1 3/8	1 1/2	1 5/8	1 3/4	1 7/8	2 1/16
10 to 12, excl	7/8	1 1/16	1 1/8	1 1/4	1 3/8	1 1/2	1 5/8	1 3/4	1 7/8	2	2 1/8
12 to 15, incl	1 1/16	1 1/4	1 5/16	1 3/8	1 1/2	1 5/8	1 3/4	1 7/8	2	2 1/8	2 1/4

[a] *Flatness Variations for Length.*—The longer dimension specified is considered the length, and variations in flatness along the length should not exceed the tabular amount for the specified width in plates up to 12 ft in length, or in any 12 ft of longer plates.

NOTE 1.—When the longer dimension is under 36 in., the variation should not exceed ⅝ in.

NOTE 2.—The variations given in the above table apply to plates which have a specified maximum tensile strength not in excess of 100 000 psi, or equivalent hardness. For plates specified to higher tensile strength or hardness, the limits given in the table are customarily increased by 50 per cent.

NOTE 3.—The above table and notes cover the variations for flatness of circular and sketch plates, based on the maximum dimensions of those plates.

SPECIFICATION FOR GENERAL REQUIREMENTS FOR HOT-ROLLED AND COLD-FINISHED CARBON AND ALLOY STEEL BARS

SA-29

(IDENTICAL WITH ASTM SPECIFICATION A 29-61T)

Scope

1. (*a*) This specification covers a group of common requirements which, unless otherwise specified in the purchase order or in an individual specification, shall apply to carbon and alloy steel bars under each of the following specifications issued by the American Society for Testing Materials (or under any other ASTM specification which invokes this specification or portions thereof):

Title of Specification	ASTM Designation[a]
Hot-Rolled Carbon Steel Bars:	
Hot-Rolled Carbon Steel Bars	A 107
Carbon Steel Bars Subject to Mechanical Property Requirements	A 306
Quenched and Tempered Carbon Steel Bars	A 321
Cold-Finished Carbon Steel Bars:	
Cold-Finished Carbon Steel Bars and Shafting	A 108
Stress-Relief-Annealed Cold-Drawn Carbon Steel Bars	A 311
Hot-Rolled Alloy Steel Bars:	
Hot-Rolled Alloy Steel Bars	A 322
Hot-Rolled Quenched and Tempered Alloy Steel Bars	A 434
Alloy Steel Bars to End Quench Hardenability Requirements	A 304
Alloy Steel Bars for Nitriding	A 355
Cold-Finished Alloy Steel Bars:	
Cold-Finished Alloy Steel Bars	A 331
Cold-Finished Quenched and Tempered Alloy Steel Bars	A 434

[a] These designations refer to the latest issue of the respective specifications.

(*b*) In case of any conflict in requirements, the requirements of the purchase order, the individual material specification, and this general specification shall prevail in the sequence named.

Definitions

2. The following definitions shall apply:

(*a*) *Hot-Rolled Steel Bars.*—Steel bars produced by hot rolling ingots, blooms, billets or other semi-finished forms to yield straight lengths (or coils, depending upon size, section, and mill equipment) in sections which are uniform throughout their length and in the following sections and sizes:

(*1*) *Rounds, Squares, and Round-Cornered Squares.*—$\frac{7}{32}$ in. and larger in thickness or diameter.

(*2*) *Flats.*—$\frac{1}{4}$ to 8 in., incl, in width; $\frac{18}{64}$ (0.2031) in. in minimum thickness up to 6 in. in width and 0.230 in. in minimum thickness for over 6 to 8 in. in width, incl. Maximum thickness for all widths is 4 in.

(*3*) *Hexagons and Octagons.*—$\frac{1}{4}$ in. and over between parallel surfaces.

(*4*) *Bar Size Shapes.*—Angles, channels, tees, zees, when their greatest cross-sectional dimension is under 3 in.

(*5*) *Special Bar Sections.*—Half-rounds, ovals, half-ovals, other special bar size sections.

(*b*) *Cold-Finished Steel Bars.*—Steel bars produced by cold finishing previously hot-rolled bars by means of cold drawing, cold rolling, turning, grinding or polishing (singly or in combination) to yield straight lengths or coils in sections which are uniform throughout their length and in the following sections and sizes:

(*1*) *Rounds.*—9 in. and under in diameter.

(*2*) *Squares.*—4 in. and under between parallel surfaces.

(*3*) *Hexagons.*—$3\frac{1}{8}$ in. and under between parallel surfaces.

(*4*) *Flats.*—$\frac{1}{4}$ in. and over in thickness and not over 12 in. in width.

(*5*) *Special Bar Sections.*

Ladle Analysis

3. (*a*) *Open Hearth, Basic Oxygen, or Electric Furnace Steel.*—An analysis of each heat of open hearth, basic oxygen, or electric furnace steel shall be made by the manufacturer to determine the percentage of carbon, manganese, phosphorus and sulfur; and of any other elements specified or restricted by the applicable specification. This analysis shall be made from a test ingot taken during the pouring of the heat. If requested or required the chemical composition thus determined shall be reported to the purchaser or his representative, and shall conform, as to elements required or restricted by the applicable specification, to the requirements thereof for ladle analysis.

(*b*) *Bessemer Steel.*—Carbon and manganese determinations shall be made of each blow of bessemer steel, and determinations for phosphorus and sulfur of each blow of bessemer free-cutting steel. For other grades of bessemer steel, determinations for phosphorus and sulfur shall be made at intervals not greater than each ten blows, and the next previous determination may be reported. The analysis shall be made by the manufacturer from test ingots taken during the pouring of the blow. The chemical composition thus determined shall be reported to the purchaser or his representative if requested, and shall conform, as to elements required or restricted by the applicable specification, to the requirements thereof for ladle analysis.

Check Analysis

4. (*a*) Merchant quality bar steel is not subject to rejection for check analysis

TABLE I.—PERMISSIBLE VARIATIONS FOR CHECK ANALYSIS OF CARBON STEEL.

Element	Limit, or Maximum of Specified Range, per cent	Over Maximum Limit, per cent	Under Minimum Limit, per cent
Carbon[a]	0.25 and under	0.02	0.02
	Over 0.25 to 0.55, incl.	0.03	0.03
	Over 0.55	0.04	0.04
Manganese	0.90 and under	0.03	0.03
	Over 0.90 to 1.65, incl.	0.06	0.06
Phosphorus[a,b]	Open hearth and basic oxygen steel	0.008	....
	Bessemer steel	0.01	0.01
Sulfur[a,b]	Except free-cutting grades	0.008	....
Silicon	0.35 and under	0.02	0.02
	Over 0.35 to 0.60, incl.	0.05	0.05
Copper	Under minimum only	....	0.02
Lead[c]	0.15 to 0.35, incl.	0.03	...

[a] Rimmed and capped steels are not subject to rejection on check analysis unless misapplication is clearly indicated.
[b] Resulfurized or rephosphorized steels are not subject to rejection on check analysis for these elements unless misapplication is clearly indicated.
[c] Check analysis tolerance for lead applies both over and under to a specified range of 0.15 to 0.35 per cent.

unless misapplication of a heat is clearly indicated.

(*b*) Analyses may be made by the purchaser from finished bars other than merchant quality representing each heat of open hearth, basic oxygen, or electric furnace steel, and each blow, or lot of bars, of bessemer steel. The chemical composition thus determined shall not vary from the limits specified in the applicable specification by more than the amounts prescribed in Tables I and II, but the several determinations of any element in a heat or blow may not vary both above and below the specified range. Rimmed or capped steel is characterized by a lack of homogeneity in its composition, especially for the elements carbon, phosphorus, and sulfur; therefore when rimmed or capped steel is specified or required, the limitations for these elements shall not be applicable. Because of the degree to which phosphorus and sulfur segregate, the limitations for these elements shall not be applicable to rephosphorized or resulfurized steels.

(*c*) Samples for analysis shall be taken by machining off the entire cross-section of the bar, or by drilling parallel to the axis of the bar at any point midway between the center and surface.

(*d*) When chips are taken by drilling, the diameter of the drill used shall conform to the following:

Area of Sample Cross-Section, sq in.	Approximate Drill Diameter, in.
16 or less	½
Over 16	1

(*e*) The minimum number of samples to be taken from material representing the same heat, blow or lot, before rejection by the purchaser, shall be as follows:

	Minimum Number of Samples
15 tons and under	4
Over 15 tons	6

(*f*) In case the number of pieces in a heat or blow is less than the number of samples required, one sample from each piece shall be considered sufficient.

(*g*) In the event that check analysis determinations are outside the permissible limits as prescribed in Paragraph (*b*), additional samples shall be analyzed and the acceptability of the heat negotiated between the purchaser and the producer.

Referee Analysis

5. In case a referee analysis is required and agreed upon to resolve a dispute concerning the results of a chemical analysis, the procedure for performing the referee analysis shall be in accordance with the latest issue of the Methods for Chemical Analysis of Steel, Cast Iron, Open-Hearth Iron, and Wrought Iron (ATSM Designation: E 30), unless otherwise agreed upon between the manufacturer and the purchaser.

Permissible Variations in Dimensions

6. (*a*) *Hot-Rolled Bars.*—The permissible variations for dimensions of hot-rolled carbon and alloy steel bars shall not exceed the applicable limits stated in Tables III to XII, incl.

(*b*) *Cold-Finished Bars.*—The permissible variations for dimensions of cold-finished carbon and alloy steel bars shall not exceed the applicable limits stated in Tables XIII to XX, incl.

Methods of Mechanical Testing

7. All mechanical tests shall be conducted in accordance with the latest issue of the Methods and Definitions for Mechanical Testing of Steel Products (ASTM Designation: A 370), and especially Supplement I thereof, on steel bar products.

Test Specimens

8. (*a*) *Selection.*—Test specimens shall be selected in accordance with the requirements of the applicable product specification or in accordance with Supplement I of the latest issue of Methods A 370, in the sequence named.

(*b*) *Preparation.*—Unless otherwise specified in the applicable product specification, test specimens shall be prepared in accordance with the latest issue of Methods A 370, and especially Supplement I thereof.

Defects

9. The material shall be free from injurious defects and shall have a workmanlike finish.

Marking

10. Bars of all sizes when loaded for shipment shall be properly marked with the name or brand of the manufacturer, the specification number, the grade number where appropriate, and the heat number for identification. Unless otherwise specified, the method of marking is at the manufacturer's option and may be made by hot stamping, cold stamping, painting, or on tags attached to lifts of bars.

TABLE II.—PERMISSIBLE VARIATIONS FOR CHECK ANALYSIS OF ALLOY STEEL.

Elements	Limit, or Maximum of Specified Range, per cent	Permissible Variations Over Maximum Limit or Under Minimum Limit, per cent
Carbon	0.30 and under	0.01
	Over 0.30 to 0.75, incl.	0.02
	Over 0.75	0.03
Manganese	0.90 and under	0.03
	Over 0.90 to 2.10, incl.	0.04
Phosphorus	Over maximum only	0.005
Sulfur	0.060 and under	0.005
Silicon	0.35 and under	0.02
	Over 0.35 to 2.20, incl.	0.05
Nickel	1.00 and under	0.03
	Over 1.00 to 2.00, incl.	0.05
	Over 2.00 to 5.30, incl.	0.07
	Over 5.30 to 10.00, incl	0.10
Chromium	0.90 and under	0.03
	Over 0.90 to 2.10, incl.	0.05
	Over 2.10 to 3.99, incl.	0.10
Molybdenum	0.20 and under	0.01
	Over 0.20 to 0.40, incl.	0.02
	Over 0.40 to 1.15, incl.	0.03
Vanadium	0.10 and under	0.01
	Over 0.10 to 0.25, incl.	0.02
	Over 0.25 to 0.50, incl.	0.03
	Minimum value specified, under minimum limit only	0.01
Tungsten	1.00 and under	0.04
	Over 1.00 to 4.00, incl	0.08
Aluminum	0.10 and under	0.03
	Over 0.10 to 0.20, incl	0.04
	Over 0.20 to 0.30, incl.	0.05
	Over 0.30 to 0.80, incl.	0.07
	Over 0.80 to 1.80, incl.	0.10
Lead[a]	0.15 to 0.35, incl.	0.03

[a] Check analysis tolerance for lead applies both over and under to a specified range of 0.15 to 0.35 per cent.

Inspection

11. The inspector representing the purchaser shall have free entry, at all times while work on the contract of the purchaser is being performed, to all parts of the manufacturer's works that concern the manufacture of the material ordered. The manufacturer shall afford the inspector, without charge, all reasonable facilities to satisfy him that the material is being furnished in accordance with this specification. All tests (except check analysis) and inspection shall be made at the place of manufacture prior to shipment, unless otherwise specified, and shall be so conducted as not to interfere unnecessarily with the operation of the works.

Retests

12. (*a*) If any test specimen shows defective machining or develops flaws, it may be discarded and another specimen substituted.

(*b*) If the percentage elongation of any tension test specimen is less than that specified and any part of the fracture is more than ¾ in. from the center of a 2-in. specimen, or is outside the middle half of the gage length of an 8-in. specimen, as indicated by scribe scratches marked on the specimen before testing, a retest shall be allowed.

(*c*) For as-rolled material, if the results of any one original tensile specimen are within 2000 psi of the required tensile strength, within 1000 psi of the required yield point, or within 2 per cent of the required elongation, retesting shall be permitted. If the original testing required only one test, the retest shall consist of two random tests from the heat or lot involved. If the original testing required two tests of which one failed by the amounts listed above, the retest shall be made on one random test from the heat or lot. If the results on the retest specimen or specimens meet the specified requirements, the heat or test lot will be accepted. If the results of one retest specimen do not meet the specified requirements, the material is subject to rejection.

(*d*) For thermally treated bars, if the results of the mechanical tests do not conform to the requirements specified, two more tests may be selected for each one failing, and each of these retests shall conform to the requirements of the product specification. However, if necessary, the manufacturer may retreat such lot one or more times, and retests shall be selected in the same manner as the original tests. Each such retest shall conform to the requirements specified.

(*e*) If a bend specimen fails, due to conditions of bending more severe than required by the specification, a retest shall be permitted from the heat or test lot involved for which one random specimen for each original specimen showing failure shall be used. If the results on the retest specimen meet the requirements of the specification, the heat or test lot will be accepted.

Rejection

13. (*a*) Unless otherwise specified, any rejection shall be reported to the manufacturer within five working days from the receipt of samples by the purchaser.

(*b*) Samples that represent rejected material shall be preserved for two weeks from the date rejection is reported to the manufacturer. In case of dissatisfaction with the results of the tests, the manufacturer may make claim for a rehearing within that time.

(*c*) Material that shows injurious defects subsequent to its acceptance at the purchaser's works will be rejected, and the manufacturer shall be notified.

TOLERANCE TABLES

TABLE III.—PERMISSIBLE VARIATIONS IN CROSS-SECTION FOR HOT-ROLLED ROUND, SQUARE, AND ROUND-CORNERED SQUARE BARS OF CARBON AND ALLOY STEEL.

Specified Size, in.	Permissible Variation from Specified Size, in.		Out-of-Round or Out-of-Square, in.[a]
	Over	Under	
To 5/16, incl	0.005	0.005	0.008
Over 5/16 to 7/16, incl	0.006	0.006	0.009
Over 7/16 to 5/8, incl	0.007	0.007	0.010
Over 5/8 to 7/8, incl	0.008	0.008	0.012
Over 7/8 to 1, incl	0.009	0.009	0.013
Over 1 to 1 1/8, incl	0.010	0.010	0.015
Over 1 1/8 to 1 1/4, incl	0.011	0.011	0.016
Over 1 1/4 to 1 3/8, incl	0.012	0.012	0.018
Over 1 3/8 to 1 1/2, incl	0.014	0.014	0.021
Over 1 1/2 to 2, incl	1/64	1/64	0.023
Over 2 to 2 1/2, incl	1/32	0	0.023
Over 2 1/2 to 3 1/2, incl	3/64	0	0.035
Over 3 1/2 to 4 1/2, incl	1/16	0	0.046
Over 4 1/2 to 5 1/2, incl	5/64	0	0.058
Over 5 1/2 to 6 1/2, incl	1/8	0	0.070
Over 6 1/2 to 8 1/4, incl	5/32	0	0.085
Over 8 1/4 to 9 1/2, incl	3/16	0	0.100

[a] Out-of-round is the difference between the maximum and minimum diameters of the bar, measured at the same cross-section. Out-of-square is the difference in the two dimensions at the same cross-section of a square bar between opposite faces.

TABLE IV.—PERMISSIBLE VARIATIONS IN CROSS-SECTION FOR HOT-ROLLED HEXAGONAL BARS OF CARBON STEEL AND HOT-ROLLED HEXAGONAL AND OCTAGONAL BARS OF ALLOY STEEL.

Specified Sizes Between Opposite Sides, in.	Permissible Variations from Specified Size, in.		Out-of-Hexagon (Carbon Steel and Alloy Steel) or Out-of-Octagon (Alloy Steel), in.
	Over	Under	
To 1/2, incl	0.007	0.007	0.011
Over 1/2 to 1, incl	0.010	0.010	0.015
Over 1 to 1 1/2, incl	0.021	0.013	0.025
Over 1 1/2 to 2, incl	1/32	1/64	1/32
Over 2 to 2 1/2, incl	3/64	1/64	3/64
Over 2 1/2 to 3 1/2, incl	1/16	1/64	1/16

[a] Out-of-hexagon or out-of-octagon is the greatest difference between any two dimensions at the same cross-section between opposite faces.

TABLE V.—PERMISSIBLE VARIATIONS IN THICKNESS AND WIDTH FOR HOT-ROLLED SQUARE EDGE AND ROUND EDGE FLAT BARS OF CARBON STEEL AND ALLOY STEEL.

Specified Width, in.	Permissible Variations in Thickness, for Thickness Given, Over and Under, in.							Permissible Variations in Width, in.	
	0.203 to 0.230, excl	0.230 to 1/4, excl	1/4 to 1/2, incl	Over 1/2 to 1, incl	Over 1 to 2, incl	Over 2 to 3, incl	Over 3	Over	Under
To 1, incl	0.007	0.007	0.008	0.010	...	...	...	1/64	1/64
Over 1 to 2, incl	0.007	0.007	0.012	0.015	1/32	...	...	1/32	1/32
Over 2 to 4, incl	0.008	0.008	0.015	0.020	1/32	3/64	3/64	1/16	1/32
Over 4 to 6, incl	0.009	0.009	0.015	0.020	1/32	1/16	1/16	3/32	1/16
Over 6 to 8, incl	[a]	0.015	0.016	0.025	1/32	1/16	[b]	1/8[b]	3/32[b]

[a] Flats over 6 to 8 in. incl, in width, are not available as hot-rolled carbon or alloy steel bars in thickness under 0.230 in.

[b] On flats over 6 to 8 in. incl, in width and over 3 in. in thickness, tolerances shall be negotiated with the manufacturer.

TABLE VI.—PERMISSIBLE VARIATIONS IN THICKNESS AND LENGTH FOR HOT-ROLLED BAR SIZE ANGLES OF CARBON STEEL.

Specified Length of Leg, in.[a]	Permissible Variations in Thickness, for Thicknesses Given, Over and Under, in.			Permissible Variations for Length of Leg Over and Under, in.
	To 1/4 incl	Over 1/4 to 3/4 incl	Over 3/4	
To 1, incl	0.008	0.010	...	1/32
Over 1 to 2, incl	0.010	0.010	0.012	3/64
Over 2 to 3, excl	0.012	0.015	0.015	1/16

[a] The longer leg of an unequal angle determines the size for tolerance. The out-of-square tolerance in either direction is 1 1/2 deg.

TABLE VII.—PERMISSIBLE VARIATIONS IN DIMENSIONS FOR HOT-ROLLED BAR SIZE CHANNELS OF CARBON STEEL.

Specified Size of Channel, in.	Permissible Variations in Size, Over and Under, in.				Out-of-Square of Either Flange, in. per in. of Flange Width[b]
	Depth of Section[a]	Width of Flanges[a]	Thickness of Web for Thickness Given		
			to 3/8, incl	Over 3/8	
To 1 1/2, incl	1/32	1/32	0.010	0.015	1/32
Over 1 1/2 to 3, excl	1/16	1/16	0.015	0.020	1/32

[a] Measurements for depth of section and width of flanges are overall.

[b] For channels 5/8 in. and under in depth, the out-of-square tolerance is 3/64 in. per in. of depth.

TABLE VIII.—PERMISSIBLE VARIATIONS IN DIMENSIONS FOR HOT-ROLLED BAR SIZE TEES OF CARBON STEEL.

Specified Size of Tee, in.[a]	Permissible Variations in Size, in.						Stem Out-of-Square[c]
	Width or Depth[b]		Thickness of Flange		Thickness of Stem		
	Over	Under	Over	Under	Over	Under	
To 1 1/4, incl	3/64	3/64	0.010	0.010	0.005	0.020	1/32
Over 1 1/4 to 2, incl	1/16	1/16	0.012	0.012	0.010	0.020	1/16
Over 2 to 3, excl	3/32	3/32	0.015	0.015	0.015	0.020	3/32

[a] The longer member of the unequal tee determines the size for tolerances.

[b] Measurements for both width and depth are overall.

[c] Stem out-of-square is the variation from its true position of the center line of the stem measured at the point.

TABLE IX.—PERMISSIBLE VARIATIONS IN DIMENSIONS FOR HALF-ROUNDS, OVALS, HALF-OVALS, AND OTHER SPECIAL BAR SIZE SECTIONS.

Due to mill facilities, tolerances on half-rounds, ovals, half-ovals, and other special bar size sections vary among the manufacturers and should be negotiated between the manufacturer and the purchaser.

TABLE X.—PERMISSIBLE VARIATIONS IN LENGTH FOR HOT-ROLLED ROUNDS, SQUARES, HEXAGONS, FLATS, AND BAR SIZE SECTIONS OF CARBON STEEL.

Specified Size of Rounds, Squares, and Hexagons, in.	Specified Size of Flats, in.		Permissible Variations Over Specified Length, in.[a]				
	Thickness	Width	5 to 10 ft, excl	10 to 20 ft, excl	20 to 30 ft, excl	30 to 30 ft excl	40 to 60 ft, excl
Mill Shearing							
To 1, incl	To 1, incl	To 3, incl	1/2	3/4	1 1/4	1 3/4	2 1/4
Over 1 to 2, incl	Over 1	To 3, incl	5/8	1	1 1/2	2	2 1/2
	To 1, incl	Over 3 to 6, incl	5/8	1	1 1/2	2	2 1/2
Over 2 to 5, incl	Over 1	Over 3 to 6, incl	1	1 1/2	1 3/4	2 1/4	2 3/4
Over 5 to 10, incl	...	...	2	2 1/2	2 3/4	3	3 1/4
...	0.230 to 1, incl	Over 6 to 8, incl	3/4	1 1/4	1 3/4	3 1/2	4
...	Over 1 to 3, incl	Over 6 to 8, incl	1 1/4	1 3/4	2	3 1/2	4
Bar Size Sections	...	...	5/8	1	1 1/2	2	2 1/2
Hot Sawing							
2 to 5, incl	1 and over	3 and over	[b]	1 1/2	1 3/4	2 1/4	2 3/4
Over 5 to 10, incl	...	...	[b]	2 1/2	2 3/4	3	3 1/4

[a] No permissible variations under.
[b] Smaller sizes and shorter lengths are not hot sawed.

TABLE XI.—PERMISSIBLE VARIATIONS IN STRAIGHTNESS FOR HOT-ROLLED BARS AND BAR SIZE SECTIONS OF CARBON STEEL AND ALLOY STEEL.[a]

Standard tolerances	1/4 in. in any 5 ft or $\frac{\text{1/4 in.} \times \text{length in ft}}{5}$
Special tolerances	1/8 in. in any 5 ft or $\frac{\text{1/8 in.} \times \text{length in ft}}{5}$

[a] Because of warpage, straightness tolerances do not apply to bars if any subsequent heating operation or controlled cooling has been performed.

TABLE XII.—PERMISSIBLE VARIATIONS IN LENGTH FOR HOT-ROLLED ROUNDS, SQUARES, HEXAGONS, OCTAGONS, AND FLATS OF ALLOY STEEL.

Specified Size of Rounds, Squares, Hexagons, Octagons, in.	Specified Size of Flats, in.		Permissible Variations Over Specified Length, in.				
	Width	Thickness	5 to 10 ft, excl	10 to 20 ft, excl	20 to 30 ft, excl	30 to 40 ft, excl	40 to 60 ft, incl
Hot Shearing							
To 1, incl[a]	3 and under	To 1, incl	1	1 1/4	1 3/4	2	2 3/4
Over 1 to 2, incl	3 and under	Over 1	1 1/4	1 1/2	1 3/4	2 1/4	3
	Over 3 to 6	To 1, incl	1 1/4	1 1/2	1 3/4	2 1/4	3
Over 2	Over 3 to 6, incl	Over 1	2	2 1/4	2 1/2	3	3 1/4
Hot Sawing							
2 and over[b]	3 and over	1 and over	....	1 3/4	2	2 1/4	2 3/4

[a] Due to rapid cooling rates of bars 1 in. and under in size, the ends of bars containing 0.48 per cent carbon may be shear cracked or irregularly fractured. If freedom from this condition is essential bars may require special processing before machine cutting.
[b] Smaller sizes are hot sheared, machine cut, or cracker cut.

TABLE XIII.—PERMISSIBLE VARIATIONS IN CROSS-SECTION FOR COLD-DRAWN BARS OF CARBON STEEL.[a]

Specified Size, in.	Permissible Variation Under Specified Size, in.[b]			
	Maximum of Carbon Range 0.28 per cent or Less	Maximum of Carbon Range Over 0.28 to 0.55 per cent, incl	Maximum of Carbon Range to 0.55 per cent, incl (Stress Relieved After Cold Finishing)	Maximum of Carbon Range Over 0.55 per cent or All Grades, Quenched and Tempered Before Cold Finishing
Rounds				
To 1, incl	0.002	0.003	0.004	0.006
Over 1 to 2, incl	0.003	0.004	0.006	0.008
Over 2 to 4, incl	0.004	0.005	0.008	0.010
Hexagons				
To 5/16, incl	0.002	0.003	0.004	0.006
Over 5/16 to 1, incl	0.003	0.004	0.006	0.008
Over 1 to 2 1/2, incl	0.004	0.005	0.008	0.010
Over 2 1/2 to 3 1/8, incl	0.005	0.006	0.010	0.012
Squares				
To 5/16, incl	0.003	0.004	0.006	0.008
Over 5/16 to 1, incl	0.004	0.005	0.008	0.010
Over 1 to 2 1/2, incl	0.005	0.006	0.010	0.012
Over 2 1/2 to 4, incl	0.006	0.008	0.012	0.016
Flats				
Width, in.[c]				
To 3/4, incl	0.003	0.004	0.006	0.008
Over 3/4 to 1 1/2, incl	0.004	0.005	0.008	0.010
Over 1 1/2 to 3, incl	0.005	0.006	0.010	0.012
Over 3 to 4, incl	0.006	0.008	0.011	0.016
Over 4 to 6, incl	0.008	0.010	0.012	0.020
Over 6	0.013	...	...	...

[a] This table includes tolerances for bars that have been annealed, spheroidize annealed, normalized, normalized and tempered, or quenched and tempered, before cold finishing. This table does not include tolerances for bars that are given the same heat treatments after cold finishing. The manufacturer should be consulted for tolerances for such bars.
[b] No permissible variations over.
[c] Width governs the tolerances for both width and thickness of flats. For example, when the maximum of carbon range is 0.28 per cent or less, for a flat 2 in. wide and 1 in. thick, the width tolerance is 0.005 in. and the thickness tolerance is the same, namely, 0.005 in.

TABLE XIV.—PERMISSIBLE VARIATIONS IN DIAMETER FOR COLD-DRAWN, TURNED, AND POLISHED ROUND BARS OF CARBON STEEL.[a]

Specified Diameter, in.	Permissible Variation Under Specified Diameter, in.[b]			
	Maximum of Carbon Range 0.28 per cent or Less	Maximum of Carbon Range Over 0.28 to 0.55 per cent, incl	Maximum of Carbon Range to 0.55 per cent, incl (Stress Relieved After Cold Finishing)	Maximum of Carbon Range Over 0.55 per cent, or All Grades, Quenched and Tempered Before Cold Finishing
To 1, incl	0.002	0.003	0.004	0.006
Over 1 to 2, incl	0.003	0.004	0.006	0.008
Over 2 to 4, incl	0.004	0.005	0.008	0.010
Over 4 to 6, incl	0.005	0.006	0.010	0.012
Over 6 to 7 3/4, incl	0.006	0.008	0.012	0.016
Over 7 3/4 to 9, incl	0.007	0.010	0.014	0.018

[a] This table includes tolerances for bars that have been annealed, spheroidize annealed, normalized, normalized and tempered, or quenched and tempered before cold finishing. This table does not include tolerances for bars that are given the same heat treatments after cold finishing. The manufacturer should be consulted for tolerances for such bars.
[b] No permissible variations over.

TABLE XV.—PERMISSIBLE VARIATIONS IN DIAMETER FOR COLD-DRAWN, GROUND, AND POLISHED ROUND BARS OF CARBON STEEL AND ALLOY STEEL.

Specified Diameter, in.	Permissible Variation Under Specified Diameter, in.[a]
To 2½, excl	0.002
2½ to 4, incl	0.003

[a] No permissible variations over.

TABLE XVI.—PERMISSIBLE VARIATIONS IN DIAMETER FOR TURNED, GROUND, AND POLISHED ROUND BARS OF CARBON STEEL AND ALLOY STEEL.

Specified Diameter, in.	Permissible Variation Under Specified Diameter, in.[a]
To 2½, excl	0.002
2½ to 4, incl,[b]	0.003

[a] No permissible variations under.
[b] Turned, ground and polished rounds in diameters greater than 4 in. are produced by some manufacturers.

TABLE XVII.—LENGTH RANGES FOR RANDOM LENGTH CUTTINGS FOR COLD-FINISHED BARS OF CARBON STEEL AND ALLOY STEEL.[a]

Lengths, ft	Length Range, in.
5 to 20, incl	24
Over 20 to 30, incl	36
Over 30 to 40, incl	48

[a] There are no accepted standards for tolerances for specific lengths. When required, tolerances should be negotiated between the manufacturer and the purchaser.

TABLE XVIII.—PERMISSIBLE VARIATIONS IN STRAIGHTNESS FOR COLD-FINISHED BARS OF CARBON STEEL AND ALLOY STEEL.

Cold-finished carbon steel bars are machine straightened within reasonable limits and are suitable for the majority of industrial uses. The degree of straightness required is satisfactory for operation in an automatic screw machine.

Specific straightness tolerances are sometimes required, in which case the purchaser should inform the manufacturer of the straightness tolerances and the methods to be used in checking the straightness.

TABLE XIX.—PERMISSIBLE VARIATIONS IN CROSS-SECTION FOR COLD-DRAWN BARS OF ALLOY STEEL

Specified Size, in.	Permissible Variation Under Specified Size, in.[a]		
	Maximum of Carbon Range 0.28 per cent or Less As Cold Finished and Without Any Thermal Treatment	Maximum of Carbon Range Over 0.28 to 0.55 per cent, incl, and All Carbons to 0.55 per cent, Maximum, Annealed or Normalized Before Cold Finishing	Maximum of Carbon Range Over 0.55 per cent, or All Carbons Quenched and Tempered or Normalized and Tempered Before Cold Finishing or All Carbons Stress Relieved After Cold Finishing
Rounds			
To 1, incl	0.003	0.005	0.007
Over 1 to 2, incl	0.004	0.006	0.009
Over 2 to 4, incl	0.005	0.007	0.011
Hexagons			
To 5/16, incl	0.003	0.005	0.007
Over 5/16 to 1, incl	0.004	0.006	0.009
Over 1 to 2½, incl	0.005	0.007	0.011
Over 2½ to 3½, incl	0.006	0.008	0.013
Squares			
To 5/16	0.004	0.006	0.009
Over 5/16 to 1, incl	0.005	0.007	0.011
Over 1 to 2½, incl	0.006	0.008	0.013
Over 2½ to 4, incl	0.007	0.010	0.017
Flats[b]			
Width, in.:[c]			
To ¾, incl	0.004	0.006	0.009
Over ¾ to 1½, incl	0.005	0.007	0.011
Over 1½ to 3, incl	0.006	0.008	0.013
Over 3 to 4, incl	0.007	0.010	0.017
Over 4 to 6, incl	0.009	0.012	0.021
Over 6	0.014	...	...

[a] No permissible variations over.
[b] The tolerances for flats apply to thickness as well as width for both cold-drawn and rolled flats.
[c] Width governs the tolerances for both width and thickness of flats. For example, when the maximum of carbon range is 0.28 per cent or less, for a flat 2 in. wide and 1 in. thick, the width tolerance is 0.006 in. and the thickness tolerance is the same, namely 0.006 in.

TABLE XX.—PERMISSIBLE VARIATIONS IN DIAMETER FOR COLD-DRAWN, TURNED, AND POLISHED ROUND BARS OF ALLOY STEEL.

Specified Diameter, in.	Permissible Variations Under Specified Diameter, in.[a]		
	Maximum of Carbon Range 0.28 per cent or Less As Cold-Finished and Without Any Thermal Treatment	Maximum of Carbon Range Over 0.28 to 0.55 per cent, incl, and All Carbons to 0.55 per cent, Maximum, Annealed or Normalized Before Cold Finishing	Maximum of Carbon Range Over 0.55 per cent, or All Carbons Quenched and Tempered Before Cold Finishing, or All Carbons Stress Relieved After Cold Finishing
To 1, incl	0.003	0.005	0.007
Over 1 to 2, incl	0.004	0.006	0.009
Over 2 to 4, incl	0.005	0.007	0.011
Over 4 to 6, incl	0.006	0.008	0.013
Over 6 to 7¾, incl	0.007	0.010	0.017
Over 7¾ to 9, incl	0.008	0.011	0.019

[a] No permissible variations over.

METHODS AND DEFINITIONS FOR MECHANICAL TESTING OF STEEL PRODUCTS

SA-370

(IDENTICAL WITH ASTM SPECIFICATION A 370-61T)

Scope

1. (*a*) These methods cover procedures and definitions for the mechanical testing of wrought and cast steel products. The various mechanical tests herein described are used in production testing to evaluate properties provided for in the product specifications.

NOTE.—In the determination of the mechanical properties of steel, variations in testing methods should be avoided and standard methods of testing followed if reproducible and comparable results are to be obtained.

(*b*) The following mechanical tests are described:

	Sections
Tension	4 to 16
Bend	17
Hardness:	18
Brinell	19 to 20
Rockwell	21
Impact	22 to 24

(*c*) Supplements covering details peculiar to certain products are appended to these methods as follows:

	Sections
Bar Products (Supplement I)	B 1 to B 4
Tubular Products (Supplement II)	T 1 to T 5
Fasteners (Supplement III)	F 1 to F 6
Round Wire Products (Supplement IV)	W 1 to W 7

General Precautions

2. (*a*) Certain methods of fabrication such as bending, forming, and welding, or operations involving heating, may affect the properties of the material under test. Therefore, the product specifications cover the stage of manufacture at which mechanical testing is to be performed. The properties shown by testing prior to fabrication may not necessarily be representative of the product after it has been completely fabricated.

(*b*) Improper machining or preparation of test specimens may give erroneous results. Care should be exercised to assure good workmanship in machining. Improperly machined specimens should be discarded and other specimens substituted.

(*c*) Flaws in the specimen may also affect results. If any test specimen develops flaws, the retest provision of the applicable product specification shall govern.

(*d*) If any test specimen fails because of mechanical reasons such as failure of testing equipment or improper specimen preparation, it may be discarded and another specimen taken.

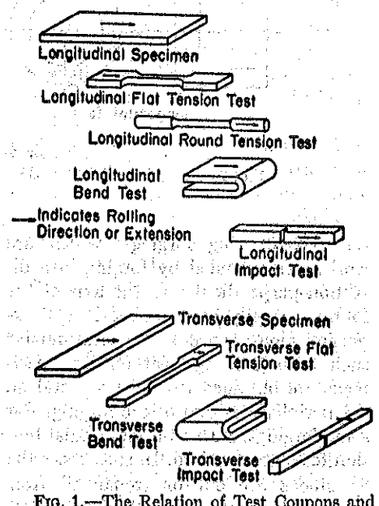

FIG. 1.—The Relation of Test Coupons and Test Specimens to Rolling Direction or Extension (Applicable to General Wrought Products).

Orientation of Test Specimens

3. (*a*) The terms "longitudinal test" and "transverse test" are used only in material specifications for wrought products and are not applicable to castings. When such reference is made to a test coupon or test specimen the following definitions apply:

Longitudinal Test, unless specifically defined otherwise, signifies that the lengthwise axis of the specimen is parallel to the direction of the greatest extension of the steel during rolling or forging. The stress applied to a longitudinal tension test specimen is in the direction of the greatest extension, and the axis of the fold of a longitudinal bend test specimen is at right angles to the direction of greatest extension (Figs. 1, 2(*a*), and 2(*b*)).

Transverse Test, unless specifically defined otherwise, signifies that the lengthwise axis of the specimen is at right angles to the direction of the greatest extension of the steel during rolling or forging. The stress applied to a transverse tension test specimen is at right angles to the greatest extension, and the axis of the fold of a transverse bend test specimen is parallel to the greatest extension (Fig. 1).

(*b*) The terms "radial test" and "tangential test" are used in material specifications for some wrought circular products and are not applicable to castings. When such reference is made to a test coupon or test specimen, the following definitions apply:

Radial Test, unless specifically defined otherwise, signifies that the lengthwise axis of the specimen is perpendicular to the axis of the product and coincident with one of the radii of a circle drawn

with a point on the axis of the product as a center (Fig. 2(*a*)).

Tangential Test, unless specifically defined otherwise, signifies that the lengthwise axis of the specimen is perpendicular to a plane containing the axis of the product and tangent to a circle drawn with a point on the axis of the product as a center (Figs. 2(*a*), 2(*b*), 2(*c*), and 2(*d*)).

Tension Test

Description

4. The tension test related to the mechanical testing of steel products subjects a machined or full-section specimen of the material under examination to a measured load sufficient to cause rupture. The resulting properties sought are defined in the Definitions of Terms Relating to Methods of Mechanical Testing (ASTM Designation: E 6). In general the testing equipment and methods are given in the Methods of Tension Testing of Metallic Materials (ASTM Designation: E 8). However, there are certain exceptions to Methods E 8 practices in the testing of steel, and these are covered in these Methods A 370.

Test Specimens

5. (*a*) *Selection.*—Test coupons shall be selected in accordance with the applicable product specifications.

(*1*) *Wrought Steels.*—Wrought steel products are usually tested in the longitudinal direction, but in some cases, where size permits and the service justifies it, testing is in the transverse, radial, or tangential directions (see Figs. 1 and 2).

(*2*) *Forged Steels.*—For open die forgings, the metal for tension testing is usually provided by allowing extensions or prolongations on one or both ends of the forgings, either on all or a representative number as provided by the applicable product specifications. Test specimens are normally taken at mid-radius. Certain product specifications permit the use of a representative bar or the destruction of a production part for test purposes. For ring or disk-like forgings test metal is provided by increasing the diameter, thickness, or length of the forging. Upset disk or ring forgings, which are worked or extended by forging in a direction perpendicular to the axis of the forging, usually have their principal extension along concentric circles and for such forgings tangential tension specimens are obtained from extra metal on the periphery or end of the forging. For some forgings, such as rotors, radial tension tests are required. In such cases the specimens are cut or trepanned from specified locations.

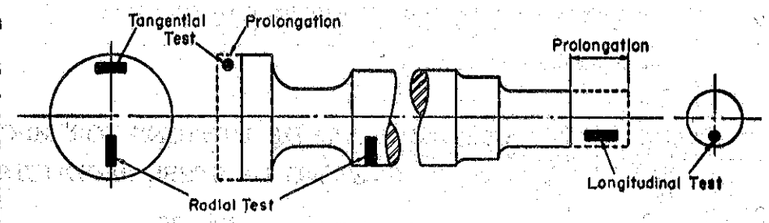

(*a*) Shafts and Rotors.

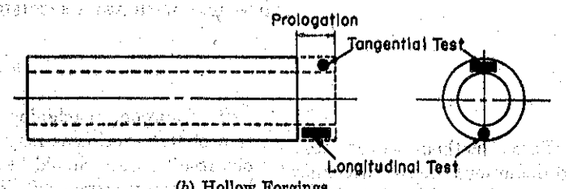

(*b*) Hollow Forgings.

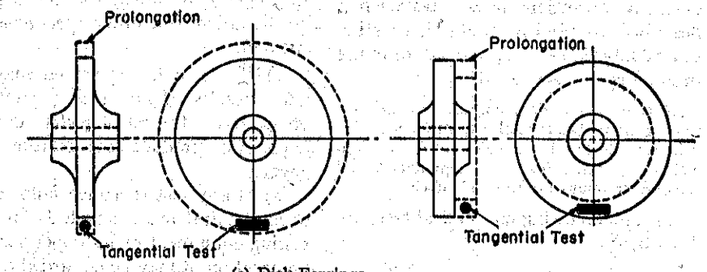

(*c*) Disk Forgings.

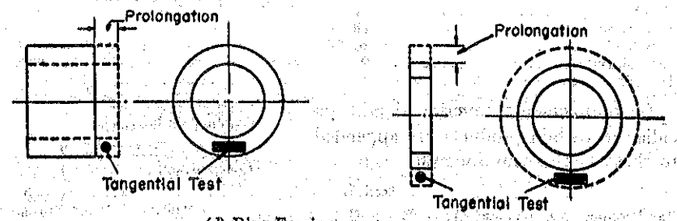

(*d*) Ring Forgings.

FIG. 2.—Locations of Test Specimens for Various Types of Forgings.

(*3*) *Cast Steels.*—Test coupons for castings from which tension test specimens are prepared shall be attached to the castings where practicable. If the design of the casting is such that test coupons should not be attached thereon, test coupons shall be cast attached to separate cast blocks (see Fig. 3 and Table I).

(*b*) *Size and Tolerances.*—The size and tolerances for standard test specimens shall be as shown in Figs. 4 to 7, inclusive. The selection of size and type of specimen is prescribed by the applicable product specification.

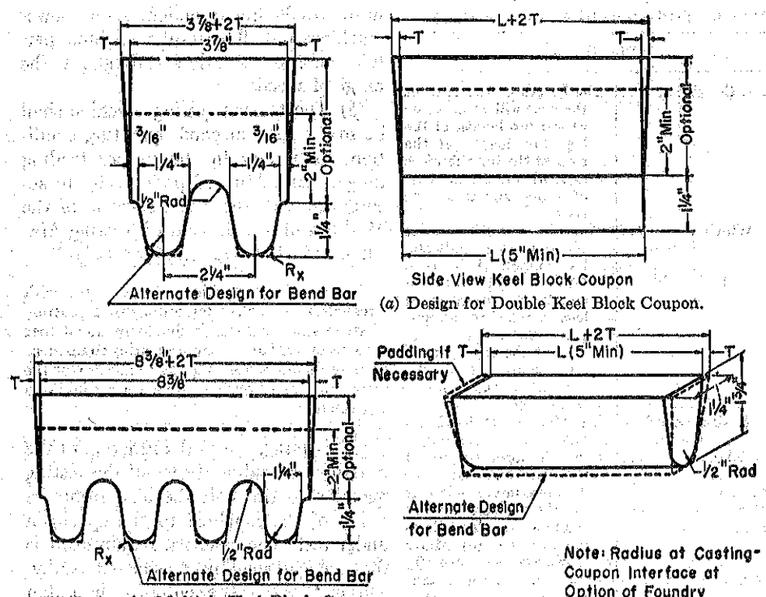

(*a*) Design for Double Keel Block Coupon.

(*b*) Design for Multiple Keel Block Coupon. (4 Legs).

(*c*) Design for "Attached" Coupon.

FIG. 3.—Test Coupons for Castings. (See Table I for Details of Design.)

(*c*) *Procurement of Test Specimens.*—Specimens shall be sheared, blanked, sawed, trepanned or oxygen-cut from portions of the material. They are usually machined so as to have a reduced cross-section at mid-length in order to obtain uniform distribution of the stress over the cross-section and to localize the zone of fracture.

When test coupons are sheared, blanked, sawed, or oxygen-cut, care shall be taken to remove by machining all distorted, cold-worked or heat-affected areas from the edges of the section used in evaluating the test.

(*d*) *Aging of Test Specimens.*—Unless otherwise specified, it shall be permissible to age tension test specimens. The time-temperature cycle employed must be such that the effects of previous processing will not be materially changed. It may be accomplished by aging at room temperature 24 to 48 hr, or in shorter time at moderately elevated temperatures by boiling in water, heating in oil or in an oven.

(*e*) *Measurement of Dimensions of Test Specimens:*

(*1*) *Standard Rectangular Tension Test Specimens.*—These forms of specimens are shown in Figs. 4 and 5. To determine the cross-sectional area, the center width dimension shall be measured to the nearest 0.005 in. for the 8-in. gage length specimen in Fig. 4 and 0.001 in. for the 2-in. gage length specimen in Fig. 5. The center thickness dimension shall be measured to the nearest 0.001 in. for both specimens.

(*2*) *Standard Round Tension Test Specimens.*—These forms of specimens are shown in Figs. 6 and 7. To determine the cross-sectional area, the diameter shall be measured at the center of the gage length to the nearest 0.001 in.

(*f*) *General.*—Test specimens shall be either substantially full size or machined, as prescribed in the product specifications for the material being tested.

(*1*) Improperly prepared test specimens often cause unsatisfactory test results. It is important, therefore, that care be exercised in the preparation of specimens, particularly in the machining, to assure good workmanship.

(*2*) It is desirable to have the cross-sectional area of the specimen smallest at the center of the gage length to insure fracture within the gage length. This is provided for by the taper in the gage length permitted for each of the specimens described in the following sections.

(*3*) For brittle materials it is desirable to have fillets of large radius at the ends of the gage length.

Plate-Type Specimen

6. The standard plate-type test specimen is shown in Fig. 4. This specimen is used for testing metallic materials in the form of plate, shapes, and flat material having a nominal thickness of $\frac{3}{16}$ in. or over.

When product specifications so permit, other types of specimens may be used, as provided in Sections 7 and 8.

Sheet-Type Specimen

7. The standard sheet-type test specimen is shown in Fig. 5. This specimen is used for testing metallic materials in the form of sheet, plate, flat wire, strip, band, hoop, rectangles, and shapes ranging in nominal thickness from 0.005 to $\frac{5}{8}$ in. When product specifications so permit, other types of specimens may be used, as provided in Section 6.

Round Specimens

8. (*a*) The standard $\frac{1}{2}$ in. diameter round test specimen shown in Fig. 6 is used quite generally for testing metallic materials, both cast and wrought.

(*b*) Figure 6 also shows small size specimens proportional to the standard specimen. These may be used when it is necessary to test material from which the standard specimen or specimens shown in Figs. 4 and 5 cannot be prepared. Other sizes of small round specimens may be used. In any such small size specimen it is important that the gage length for measurement of elongation be four times the diameter of the specimen (see Note 4, Fig. 6).

The shape of the ends of the specimen outside of the gage length shall be suitable to the material and of a shape to fit the holders or grips of the testing machine so that the loads are applied axially. Figure 7 shows specimens with

TABLE I.—DETAILS OF TEST COUPON DESIGN FOR CASTINGS (SEE FIG. 3).

Leg Design		Riser Design	
1. *L* (length)	A 5 in. minimum length will be used. This length may be increased at the option of the foundry to accommodate additional test bars (see Note 1).	1. *L* (length)	The length of the riser at the base will be the same as the top length of the leg. The length of the riser at the top therefore depends on the amount of taper added to the riser.
2. End taper	Use of and size of end taper is at the option of the foundry.	2. Width	The width of the riser at the base of a multiple-leg coupon shall be $n(2\frac{1}{4}) - \frac{5}{8}$ where n equals the number of legs attached to the coupon. The width of the riser at the top is therefore dependent on the amount of taper added to the riser.
3. Height	$1\frac{1}{4}$ in.	3. *T* (riser taper)	Use of and size is at the option of the foundry.
4. Width (at top)	$1\frac{1}{4}$ in. (see Note 1).	4. Height	The minimum height of the riser shall be 2 in. The maximum height is at the option of the foundry for the following reasons: (*a*) Many risers are cast open, (*b*) different compositions may require variation in risering for soundness, (*c*) different pouring temperatures may require variation in risering for soundness.
5. Radius (at bottom)	$\frac{1}{2}$ in., max		
6. Spacing between legs	A $\frac{1}{2}$ in. radius will be used between the legs.		
7. Location of test bars	The tensile, bend, and impact bars will be taken from the lower portion of the leg (see Note 2).		
8. Number of legs	The number of legs attached to the coupon is at the option of the foundry providing they are equispaced according to Item 6.		
9. *R*	Radius from 0 to approximately $\frac{1}{16}$ in.		

NOTE 1.—*Test Coupons for Large and Heavy Steel Castings:* The test coupons in Fig. 3 are to be used for large and heavy steel castings. However, at the option of the foundry the cross-sectional area and length of the standard coupon may be increased as desired. This provision does not apply to the Specification for Heavy-Walled Carbon and Low Alloy Steel Castings for Steam Turbines (ASTM Designation: A 356).

NOTE 2.—*Bend Bar:* If a bend bar is required, an alternate design (as shown by dotted lines in Fig. 3) is indicated.

various types of ends which have given satisfactory results.

Gage Marks

9. The specimens shown in Figs. 4, 5, and 6, inclusive, shall be gage marked with a center punch, scribe marks, multiple device, or drawn with ink. The purpose of these gage marks is to determine the per cent elongation. Punch marks shall be light, sharp, and accurately spaced. The localization of stress at the marks makes a hard specimen susceptible to starting fracture at the punch marks. The gage marks for measuring elongation after fracture shall be made on the flat or on the edge of the flat tension test specimen and within the parallel section; for the 8 in. gage length specimen, Fig. 4, one or more sets of 8 in. gage marks may be used intermediate marks within the gage length being optional. Rectangular 2 in. gage length specimens, Fig. 5, and round specimens, Fig. 6, are gage marked with a double pointed center punch or scribe marks. In both cases the gage points shall be approximately equidistant from the center of the length of the reduced section. These same precautions shall be observed when the test specimen is full section.

Testing Apparatus and Operations

10. (*a*) *Loading Systems.*—There are two general types of loading systems, mechanical (screw power) and hydraulic. These differ chiefly in the variability of the rate of load application. The older screw power machines are limited to a small number of fixed free running crosshead speeds. Some modern screw power machines and all hydraulic machines permit stepless variation throughout the range of speeds.

(*b*) The tension testing machine shall be maintained in good operating condition, used only in the proper loading range, and calibrated periodically in accordance with the latest revision of the Methods of Verification of Testing Machines (ASTM Designation: E 4).

NOTE.—Many machines are equipped with stress-strain recorders for autographic plotting of stress-strain curves. It should be noted that some recorders have a load measuring component entirely separate from the load indicator of the testing machine. Such recorders are calibrated separately.

(*c*) *Loading.*—It is the function of the gripping or holding device of the testing machine to transmit the load from the heads of the machine to the specimen under test. The essential requirement is that the load shall be transmitted axially. This implies that the centers of the action of the grips shall be in alignment, insofar as practicable, with the axis of the specimen at the beginning and during the test, and that bending or twisting be held to a minimum. Gripping of the specimen shall be restricted to the section outside the gage length. In the case of certain sections tested in full size, non-axial loading is unavoidable and in such cases shall be permissible.

(*d*) *Speed of Testing.*—The speed of testing shall not be greater than that at which load and strain readings can be made accurately. In production testing, speed of testing is commonly expressed (*1*) in terms of free running crosshead speed (rate of movement of the crosshead of the testing machine when not under load), or (*2*) in terms of rate of separation of the two heads of the testing machine under load, or (*3*) in terms of rate of stressing the specimen. Speed of testing may also be expressed in terms of rate of straining the specimen. However, it is not practicable to control the rate of straining on machines currently used in production testing. The following limitations on the speed of testing are recommended as adequate for most steel products:

(*1*) Any convenient speed of testing may be used up to one-half the specified

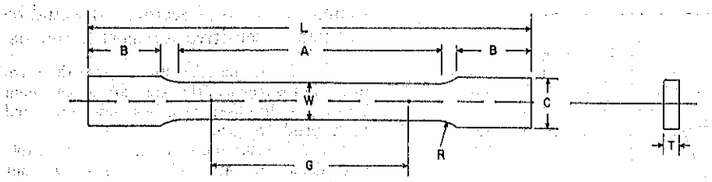

DIMENSIONS

G—Gage length (Note 1)	8.00 ± 0.01 in.
W—Width (Notes 2 and 3)	$1\frac{1}{2}\left\{\begin{matrix}+\frac{1}{8}\text{ in.}\\-\frac{1}{4}\text{ in.}\end{matrix}\right.$
T—Thickness	thickness of material
R—Radius of fillet (Note 4)	1 in., min
L—Overall length	18 in., min
A—Length of reduced section	9 in., min
B—Length of grip section (Note 5)	3 in., min
C—Width of grip section (Notes 1 and 6)	2 in., approx.

NOTE 1.—Punch marks for measuring elongation after fracture shall be made on the flat or on the edge of the specimen and within the reduced section. Either a set of nine or more punch marks 1 in. apart, or one or more pairs of punch marks 8 in. apart may be used.

NOTE 2.—The specimen may be modified by making the sides parallel throughout the length of the specimen, the width and tolerances being the same as those specified in Fig. 4. When necessary a narrower specimen may be used. In such case the width should be as great as the width of the material being tested permits. If the width is $1\frac{1}{2}$ in. or less, the sides may be parallel throughout the length of the specimen.

NOTE 3.—The ends of the reduced section shall not differ in width by more than 0.004 in. There may be a gradual taper in width from the ends to the center, but the width at either end shall not be more than 0.015 in. greater than the width at the center.

NOTE 4.—A $\frac{1}{2}$-in. minimum radius at the ends of the reduced section is permitted for steel specimens under 100,000 psi in tensile strength when a profile cutter is used to machine the reduced section.

NOTE 5.—It is desirable, if possible, to make the length of the grip section great enough to allow the specimen to extend into the grips a distance equal to two thirds or more of the length of the grips.

NOTE 6.—The ends of the specimen shall be symmetrical with the center line of the reduced section within 0.10 in.

FIG. 4.—Standard Rectangular Tension Test Specimen with 8-in. Gage Length.

yield point or yield strength. When this point is reached, the rate of separation of the crossheads under load shall be adjusted so as not to exceed $\frac{1}{16}$ in. per min per inch of gage length, or the distance between the grips for test specimens not having reduced sections. This speed shall be maintained through the yield point or yield strength. In determining the tensile strength, the rate of separation of the heads under load shall not exceed $\frac{1}{2}$ in. per min per inch of gage length.

(*2*) It shall be permissible to set the speed of the testing machine by adjusting the free running crosshead speed to the above specified values, inasmuch as the rate of separation of heads under load at these machine settings is less than the specified values of free running crosshead speed.

(*3*) As an alternate, if the machine is equipped with a device to indicate the rate of loading, the speed of the machine from half the specified yield point or yield strength through the yield point or yield strength may be adjusted so that the rate of stressing does not exceed 100,000 psi per min.

Definitions of Terms

11. For definitions of terms pertaining to tension testing, including tensile strength, yield point, yield strength, elongation, and reduction of area, reference should be made to the Definitions of Terms Relating to Methods of Mechanical Testing (ASTM Designation: E 6).

Determination of Tensile Properties

Yield Point

12. (*a*) *For material having a "sharp-kneed" stress-strain diagram, the yield point shall be determined by one of the methods described in the following Paragraphs (1) or (2).*

(*1*) *Drop of the Beam or Halt of the Pointer Method.*—In this method an increasing load is applied to the specimen at a uniform rate. When a lever and poise machine is used, the operator keeps the beam in balance by running out the poise at approximately a steady rate. When the yield point of the material is reached, the increase of the load stops, but the operator runs the poise a trifle beyond the balance position, and the beam of the machine drops for a brief but appreciable interval of time. When a machine equipped with a load indicating-dial is used there is a halt or hesitation of the load-indicating pointer corresponding to the drop of the beam. The load at the "drop of the beam" or the "halt of the pointer" is noted and the corresponding stress is recorded as the yield point.

(*2*) *Autographic Diagram Method.*—When a sharp-kneed stress-strain diagram is obtained by an autographic recording device, the stress corresponding to the top of the knee or the point at which the curve drops is to be taken as the yield point (see Fig. 8).

(*b*) *When test specimens do not exhibit a well defined disproportionate deformation that characterizes a yield point as measured by the drop of the beam, halt of the pointer, or autographic diagram methods described in Item (2) of Paragraph (a), a value equivalent to the yield point in its practical significance may be determined by the following methods and may be recorded as yield point:*

(*1*) *Divider Method.*—In this method the operator, with a pair of dividers or similar device, notes detectable elongation between two gage marks on the specimen. When detectable elongation occurs, the load at that instant is noted, and the stress corresponding to the load is recorded as the yield point. The gage marks selected for this determination shall not be more than 2 in. apart, even on specimens of longer gage lengths.

(*2*) *Total Extension Under Load Method.*—A class *C* extensometer (Note 3) is attached to the specimen. When the load producing a specified extension is reached the stress corresponding to the load is recorded as the yield point, and the extensometer is removed (see Fig. 9).

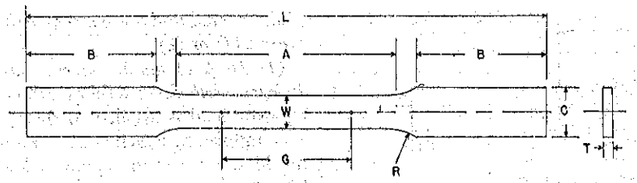

DIMENSIONS

G—Gage length	2.000 ± 0.005 in.
W—Width (Notes 1 and 2)	0.500 ± 0.010 in.
T—Thickness	thickness of material
R—Radius of fillet	½ in., min
L—Overall length	8 in., min
A—Length of reduced section	2¼ in., min
B—Length of grip section (Note 3)	2 in., min
C—Width of grip section (Notes 1 and 4)	¾ in., approx

NOTE 1.—The specimen may be modified by making the sides parallel throughout the length of the specimen, the width and tolerances being the same as those specified for the reduced section. When necessary a narrower specimen may be used. In such case the width should be as great as the width of the material being tested permits. If the width is ½ in. or less the sides may be parallel throughout the length of the specimen.

NOTE 2.—The ends of the reduced section shall not differ in width by more than 0.002 in. There may be a gradual taper in width from the ends to the center, but the width at either end shall not be more than 0.005 in. greater than the width at the center.

NOTE 3.—It is desirable, if possible, to make the length of the grip section great enough to allow the specimen to extend into the grips a distance equal to two thirds or more of the length of the grips. If the thickness of the specimen is over ⅜ in., longer grips and correspondingly longer grip sections of the specimen may be necessary to prevent failure in the grip section.

NOTE 4.—The ends of the specimen shall be symmetrical with the center line of the reduced section within 0.01 in. However, for steel if the ends are symmetrical within 0.05 in. a specimen may be considered satisfactory for all but referee testing.

FIG. 5.—Standard Rectangular Tension Test Specimen with 2-in. Gage Length.

NOTE 1.—For steel with a yield point specified not over 80,000 psi, an appropriate value is 0.005 in. per in. of gage length. For values above 80,000 psi, this method is not valid unless the limiting total extension is increased. For such materials, yield strength should preferably be specified.

NOTE 2.—Automatic devices are available that determine the load at the specified total extension without plotting a stress-strain curve. Such devices may be used if their accuracy has been demonstrated.

NOTE 3.—Reference should be made to the Method of Verification and Classification of Extensometers (ASTM Designation: E 83).

Yield Strength

13. Yield strength shall be determined by either of the methods described in the following Paragraphs (*a*) and (*b*):

(*a*) *Extension Under Load Method.*—For tests to determine the acceptance or rejection of material whose stress-strain characteristics are well known from previous tests of similar material in which stress-strain diagrams were plotted, the total strain corresponding to the stress at which the specified offset occurs will be known within satisfactory limits. The stress on the specimen, when this total strain is reached, is the value of the yield strength. The total strain can be obtained satisfactorily by use of a class B1 extensometer (Note 3 of Section 13). It is recommended that this approximate method be used only when the product specification permits (see Fig. 9).

(*b*) *Offset Method.*—To determine the yield strength by the "offset method," it is necessary to secure data (autographic or numerical) from which a stress-strain diagram may be drawn. Then on the stress-strain diagram (Fig. 10) lay off *Om* equal to the specified value of the offset, draw *mn* parallel to *OA*, and thus locate *r*, the intersection of *mn* with the stress-strain curve corresponding to load *R* which is the yield strength load (see Note 2). In reporting values of yield strength obtained by this method, the specified value of "offset" used should be stated in parentheses after the term yield strength.

Thus:

Yield Strength (0.2 per cent Offset) = 52 000 psi

In using this method a class B1 extensometer (Note 3 of Section 13) would be sufficiently sensitive for most materials.

NOTE 1.—If the load drops before the specified offset is reached, the stress at the maximum load before the offset is reached may be reported as the yield strength.

NOTE 2.—Automatic devices are available that determine offset yield strength without plotting a stress-strain curve. Such devices may be used if their accuracy has been demonstrated.

NOTE 3.—The proportional limit may be regarded as a special value of the yield strength. It is the highest stress for which the offset is not measurable with the instrument used.

NOTE 4.—An alternate method for determining yield strength of tubular products by transverse testing is the hydraulic ring expansion method described in Supplement II to these methods.

NOTE 5.—The appropriate magnitude of the extension under load will obviously vary with the strength range of the particular steel under test. In general, the value of extension under load applicable to steel at any strength level may be determined from the sum of the proportional strain and the plastic strain expected at the specified yield strength.

The following formula is used:

$$\text{Extension Under Load in inches per inch of gage length} = \frac{YS}{E} + r$$

where:

YS = specified yield strength,
E = modulus of elasticity in pounds per square inch, and
r = limiting plastic strain in inches per inch.

Tensile Strength

14. The tensile strength shall be calculated by dividing the maximum load the specimen sustains during a tension test by the original cross-sectional area of the specimen.

Elongation

15. (*a*) The ends of the fractured specimen shall be fitted together carefully and the distance between the gage marks measured to the nearest 0.01 in. for gage lengths of 2 in. and under, and to the nearest 0.5 per cent of the gage length for gage lengths over 2 in. A percentage scale reading to 0.5 per cent of the gage length may be used. The elongation is the increase in length of the gage length, expressed as a percentage of the original gage length. In reporting elongation values, both the percentage increase and the original gage length shall be given.

(*b*) If any part of the fracture takes place outside of the middle half of the gage length or in a punched or scribed mark within the reduced section, the elongation value obtained may not be representative of the material. If the elongation so measured meets the minimum requirements specified, no further testing is indicated, but if the elongation is less than the minimum requirements, the test shall be discarded and a retest made.

Reduction of Area

16. The ends of the fractured specimen shall be fitted together and the mean diameter or the width and thickness at the smallest cross-section measured to the same accuracy as the original dimensions. The difference between the area thus found and the area of the original cross-section expressed as a percentage of the original area, is the reduction of area.

BEND TEST

Description

17. (*a*) The bend test is one method for evaluating ductility, but it cannot be considered as a quantitative means of predicting service performance in bending operations. The severity of the bend test is primarily a function of the angle of bend and inside diameter to which the specimen is bent, and of the cross-section of the specimen. These conditions are varied according to location and orientation of the test specimen and the chemical composition, tensile properties, hardness, type, and quality of the steel specified.

(*b*) Unless otherwise specified, it shall be permissible to age bend test specimens. The time-temperature cycle employed must be such that the effects of previous processing will not be materially changed. It may be accomplished by aging at room temperature 24 to 48 hr, or in shorter time at moderately elevated temperatures by boiling in water, heating in oil, or in an oven.

(*c*) The test specimen shall be bent at room temperature to an inside diameter, as designated by the applicable product specifications, to the extent specified without major cracking on the outside of the bent portion. The speed of bending is ordinarily not an important factor.

HARDNESS TEST

General

18. A hardness test is a means of determining resistance to penetration and is occasionally employed to obtain a quick approximation of tensile strength. Table III for the conversion of hardness measurements from one scale to another or to approximate tensile strength is based on the conversions given in the Federal Standard No. 151, Method 241.2 (see footnote to Table III). There are several methods of determining hardness, the most common being Brinell and Rockwell.

Brinell Test

19. (*a*) *Description.*—A specified load is applied to a flat surface of the specimen to be tested, through a hard ball of specified diameter. The average diameter of the indentation is used as a basis for calculation of the Brinell hardness number. The quotient of the applied load divided by the area of the surface of the indentation, which is assumed to be spherical, is termed the Brinell hardness number (BHN) in accordance with the following formula:

$$BHN = \frac{P}{\frac{\pi D}{2}\left(D - \sqrt{D^2 - d^2}\right)}$$

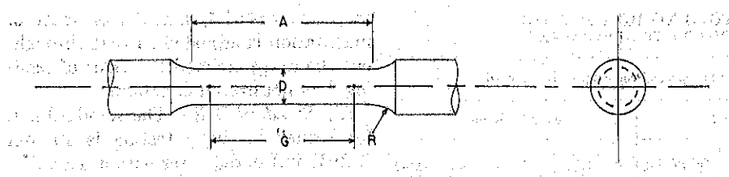

DIMENSIONS

	Standard Specimen	Small Size Specimens Proportional to Standard	
	0.500 in. Round	0.350 in. Round	0.250 in. Round
G—Gage length, in.	2.000 ± 0.005	1.400 ± 0.005	1.000 ± 0.005
D—Diameter (Note 1), in.	0.500 ± 0.010	0.350 ± 0.007	0.250 ± 0.005
R—Radius of fillet, min, in.	⅜	⅜	¼
A—Length of reduced section (Note 2), min, in.	2¼	1¾	1¼

NOTE 1.—The reduced section may have a gradual taper from the center toward the ends, with the ends not more than 0.005 in. larger in diameter than the center (controlling dimension) on the standard specimen and not more than 0.003 in. larger than the center on the small size specimens.

NOTE 2.—If desired, on the small size specimens the length of the reduced section may be increased to accommodate an extensometer. However, reference marks for the measurement of elongation should nevertheless be spaced at the indicated gage length.

NOTE 3.—The gage length and fillets shall be as shown, but the ends may be of any form to fit the holders of the testing machine in such a way that the load shall be axial (see Fig. 7). If the ends are to be held in grips it is desirable, if possible, to make the length of the grip section great enough to allow the specimen to extend into the grips a distance equal to two thirds or more of the length of the grips.

NOTE 4.—On the standard round specimens in Figs. 6 and 7, the gage lengths are equal to four times the diameter. In some product specifications other specimens may be provided for, but unless the 4 to 1 ratio is maintained within the dimensional tolerances shown above for standard specimens, the elongation and reduction values may not be comparable with those obtained from standard test specimens.

NOTE 5.—The three most frequently used diameters, 0.505 in., 0.357 in., and 0.252 in. corresponding to the 0.500 in., 0.350 in., and 0.250 in., categories shown, are such as to permit easy calculations of stresses from loads, since the corresponding cross-sectional areas are close to 0.2, 0.1, and 0.05 sq in. respectively. Thus, the stresses (or strengths) may be computed by using the simple multiplying factors 5, 10, and 20, respectively. The tolerances on the diameters of the standard specimens shown in the chart are provided to permit this practice. The simple multiplying factors for the calculation of stresses may not be used, however, if the actual center (controlling) diameters differ from the 0.505 in., 0.357 in., or 0.252 in., diameters by more than 0.001 in. In such cases, the multiplying factors given in Table II are to be used.

FIG. 6.—Standard ½-in. Round Tension Test Specimen with 2-in. Gage Length and Examples of Small Size Specimens Proportional to the Standard Specimen.

TABLE II.—MULTIPLYING FACTORS TO BE USED FOR VARIOUS DIAMETERS OF ROUND TEST SPECIMENS.

Standard Specimen			Small Size Specimens Proportional to Standard					
0.500 in. Round			0.350 in. Round			0.250 in. Round		
Actual Diameter, in.	Area, Sq in.	Multiplying Factor	Actual Diameter, in.	Area, Sq in.	Multiplying Factor	Actual Diameter, in.	Area, Sq in.	Multiplying Factor
0.490	0.1886	5.30	0.343	0.0924	10.82	0.245	0.0471	21.21
0.491	0.1893	5.28	0.344	0.0929	10.76	0.246	0.0475	21.04
0.492	0.1901	5.26	0.345	0.0935	10.70	0.247	0.0479	20.87
0.493	0.1909	5.24	0.346	0.0940	10.64	0.248	0.0483	20.70
0.494	0.1917	5.22	0.347	0.0946	10.57	0.249	0.0487	20.54
0.495	0.1924	5.20	0.348	0.0951	10.51	0.250	0.0491	20.37
0.496	0.1932	5.18	0.349	0.0957	10.45	0.251	0.0495	20.21
							(0.05)[a]	(20.0)[a]
0.497	0.1940	5.15	0.350	0.0962	10.39	0.252	0.0499	20.05
							(0.05)[a]	(20.0)[a]
0.498	0.1948	5.13	0.351	0.0968	10.33	0.253	0.0503	19.89
							(0.05)[a]	(20.0)[a]
0.499	0.1956	5.11	0.352	0.0973	10.28	0.254	0.0507	19.74
0.500	0.1963	5.09	0.353	0.0979	10.22	0.255	0.0511	19.58
0.501	0.1971	5.07	0.354	0.0984	10.16	...	...	...
0.502	0.1979	5.05	0.355	0.0990	10.10	...	...	...
0.503	0.1987	5.03	0.356	0.0995	10.05	...	...	...
				(0.1)[a]	(10.0)[a]	...	...	...
0.504	0.1995	5.01	0.357	0.1001	9.99	...	...	...
	(0.2)[a]	(5.0)[a]		(0.1)[a]	(10.0)[a]	...	...	...
0.505	0.2003	4.99	...	...	...	...	...	...
	(0.2)[a]	(5.0)[a]						
0.506	0.2011	4.97	...	...	...	...	...	...
	(0.2)[a]	(5.0)[a]						
0.507	0.2019	4.95	...	...	...	...	...	...
0.508	0.2027	4.93	...	...	...	...	...	...
0.509	0.2035	4.91	...	...	...	...	...	...
0.510	0.2043	4.90	...	...	...	...	...	...

[a] The values in parentheses may be used for ease in calculation of stresses, in pounds per square inch, as permitted in Note 5 of Fig. 6.

where:

BHN = Brinell hardness number,
P = applied load in kilograms,
D = diameter in millimeters of the steel ball, and
d = average diameter in millimeters of the indentation.

NOTE.—The Brinell hardness number is more conveniently secured from standard tables which show numbers corresponding to the various indentation diameters, usually in increments of 0.05 mm.

The standard Brinell test using a 10-mm ball employs a 3000-kg load for hard materials and a 1500- or 500-kg load for thin sections or soft materials (see Supplement II on Steel Tubular Products, Section T 4). Other loads and different size indentors may be used when specified. In reporting hardness values, the diameter of the ball and the load must be stated except when a 10-mm ball and 3000-kg load are used.

A range of hardness can properly be specified only for quenched and tempered or normalized and tempered material. For annealed material a maximum figure only should be specified. For normalized material a minimum or a maximum hardness may be specified by agreement. In general, no hardness requirements should be applied to untreated material.

Brinell hardness may be required when tensile properties are not specified. When agreed upon, hardness tests can be substituted for tension tests in order to expedite testing of a large number of duplicate pieces from the same lot.

(*b*) *Apparatus.*—Equipment shall meet the following requirements:

(*1*) *Testing Machine.*—A Brinell hardness testing machine is acceptable for use over a loading range within which its load measuring device is accurate within 3 per cent.

(*2*) *Micrometer Microscope.*—The micrometer microscope or equivalent device for measuring diameter or depth of indentation is adjusted so that throughout the range covered the error of reading does not exceed 0.02 mm.

(*3*) *Standard Ball.*—The standard ball for Brinell hardness testing is 10 mm (0.3937 in.) in diameter with a deviation from this value of not more than 0.01 mm (0.0004 in.) in any diameter. A ball suitable for use must not show a permanent change in diameter greater than 0.01 mm (0.0004 in.) when pressed with a force of 3000 kg against the test specimen.

(*c*) *Test Specimen.*—Brinell hardness tests are made on prepared areas and sufficient metal must be removed from the surface to eliminate decarburized metal and other surface irregularities. The thickness of the piece tested must be such that no bulge or other marking showing the effect of the load appears on the side of the piece opposite the indentation.

(*d*) *Procedure.*—It is essential that the applicable product specifications state clearly the position at which Brinell hardness indentations are to be made and the number of such indentations required. The distance of the center of the indentation from the edge of the specimen or edge of another indentation must be at least three times the diameter of the indentation.

The load shall be applied for a minimum of 10 sec.

Two diameters of the indentation at right angles shall be measured to the nearest 0.1 mm, estimated to the nearest 0.05 mm, and averaged to the nearest 0.05 mm. If the two diameters differ by more than 0.1 mm, the readings shall be discarded and a new indentation made.

A steel ball shall not be used on steels having a hardness over 444 BHN nor a carbide ball over 627 BHN. The Brinell test is not recommended for materials having a BHN over 627.

(*e*) *Detailed Procedure.*—For detailed requirements of this test, reference shall be made to the latest revision of the Methods of Test for Brinell Hardness of Metals (ASTM Designation: E 10).

Portable Hardness Test

20. (*a*) *Portable Testers.*—Under certain circumstances, it may be desirable to substitute a portable Brinell testing instrument, which is calibrated to give equivalent results to those of a standard Brinell machine on a comparison test bar of approximately the same hardness as the material to be tested.

(*b*) *Detailed Procedure.*—For detailed requirements of the portable test, reference shall be made to the latest revision of the Method of Test for Indentation Hardness of Metallic Materials By Portable Hardness Testers (ASTM Designation: E 110).

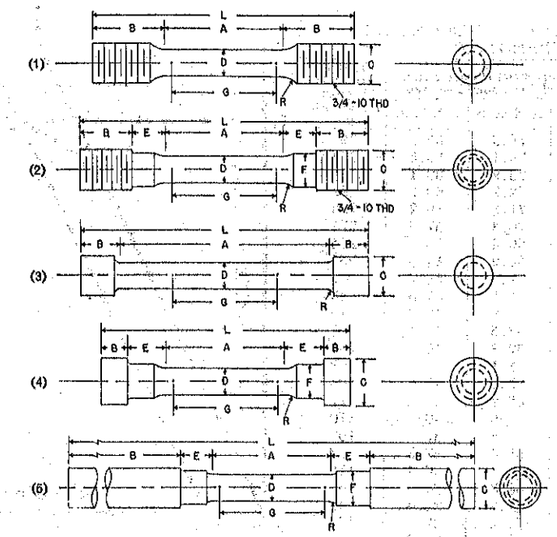

DIMENSIONS

	Specimen 1	Specimen 2	Specimen 3	Specimen 4	Specimen 5
G—Gage length, in.	2.000 ± 0.005	2.000 ± 0.005	2.000 ± 0.005	2.000 ± 0.005	2.000 ± 0.005
D—Diameter (Note 1), in.	0.500 ± 0.010	0.500 ± 0.010	0.500 ± 0.010	0.500 ± 0.010	0.500 ± 0.010
R—Radius of fillet, in.	3/8, min	3/8, min	1/16	3, min	3/8, min
A—Length of reduced section, in.	2 1/4, min	2 1/4, min	4, approx	2 1/4, min	2 1/4, min
L—Overall length, in.	5, approx	5 1/2, approx	5 1/2, approx	4 3/4, approx	9 1/2, approx
B—Length of end section (Note 2), in.	1 3/8, approx	1, approx	3/4, approx	1/2, approx	3, min
C—Diameter of end section, in.	3/4	3/4	23/32	7/8	3/4
E—Length of shoulder and fillet section, in.	...	5/8, approx	...	3/4, approx	5/8, approx
F—Diameter of shoulder, in.	...	5/8	...	5/8	19/32

NOTE 1.—The reduced section may have a gradual taper from the ends toward the center with the ends not more than 0.005 in. larger in diameter than the center.

NOTE 2.—On specimen (5) it is desirable, if possible, to make the length of the grip section great enough to allow the specimen to extend into the grips a distance equal to two thirds or more of the length of the grips.

FIG. 7.—Various Types of Ends for Standard Round Tension Test Specimens.

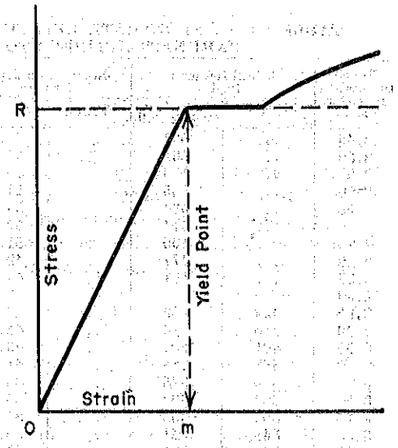

FIG. 8.—Stress-Strain Diagram Showing Yield Point Corresponding with Top of Knee.

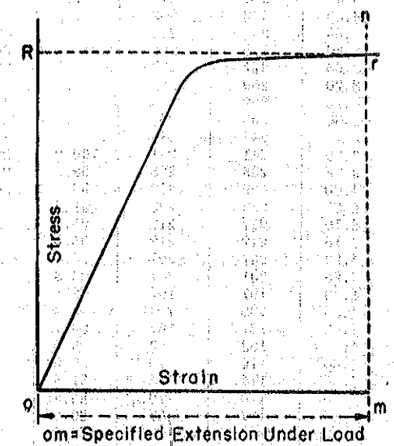

FIG. 9.—Stress-Strain Diagram Showing Yield Point or Yield Strength by Extension Under Load Method.

Rockwell Test

21. (*a*) *Description.*—In this test a hardness value is obtained by using a direct reading testing machine which measures hardness by determining the depth of penetration of a diamond point or a steel ball into the specimen under certain arbitrarily fixed conditions. A minor load of 10 kg is first applied which causes an initial penetration, sets the penetrator on the material and holds it in position. A major load which depends on the scale being used is applied increasing the depth of indentation. The major load is removed and, with the minor load still acting, the Rockwell number, which is proportional to the difference in penetration between the major and minor loads, is read directly on the dial gage. This is an arbitrary number which increases with increasing hardness. The scales most frequently used are as follows:

TABLE III.—APPROXIMATE RELATION OF BRINELL AND ROCKWELL HARDNESS NUMBERS TO TENSILE STRENGTH.[a]

Brinell Indentation Diameter, mm	Brinell Hardness Number		Rockwell Hardness Number		Rockwell Superficial Hardness Number Superficial Diamond Penetrator			Tensile Strength (Approximate) 1000 psi
	Standard Ball	Tungsten-Carbide Ball	B Scale	C Scale	15 N Scale	30 N Scale	45 N Scale	
2.45	...	627	...	58.7	89.6	76.3	65.1	347
2.50	...	601	...	57.3	89.0	75.1	63.5	328
2.55	...	578	...	56.0	88.4	73.9	62.1	313
2.60	...	555	...	54.7	87.8	72.7	60.6	298
2.65	...	534	...	53.5	87.2	71.6	59.2	288
2.70	...	514	...	52.1	86.5	70.3	57.6	274
2.75	...	495	...	51.0	85.9	69.4	56.1	264
2.80	...	477	...	49.6	85.3	68.2	54.5	252
2.85	...	461	...	48.5	84.7	67.2	53.2	242
2.90	...	444	...	47.1	84.0	65.8	51.5	230
2.95	429	429	...	45.7	83.4	64.6	49.9	219
3.00	415	415	...	44.5	82.8	63.5	48.4	212
3.05	401	401	...	43.1	82.0	62.3	46.9	202
3.10	388	388	...	41.8[b]	81.4	61.1	45.3	193
3.15	375	375	...	40.4	80.6	59.9	43.6	184
3.20	363	363	...	39.1	80.0	58.7	42.0	177
3.25	352	352	...	37.9	79.3	57.6	40.5	170
3.30	341	341	...	36.6	78.6	56.4	39.1	163
3.35	331	331	...	35.5	78.0	55.4	37.8	158
3.40	321	321	...	34.3	77.3	54.3	36.4	152
3.45	311	311	...	33.1	76.7	53.3	34.4	147
3.50	302	302	...	32.1	76.1	52.2	33.8	143
3.55	293	293	...	30.9	75.5	51.2	32.4	139
3.60	285	285	...	29.9	75.0	50.3	31.2	136
3.65	277	277	...	28.8	74.4	49.3	29.9	131
3.70	269	269	...	27.6	73.7	48.3	28.5	128
3.75	262	262	...	26.6	73.1	47.3	27.3	125
3.80	255	255	...	25.4	72.5	46.2	26.0	121
3.85	248	248	...	24.2	71.7	45.1	24.5	118
3.90	241	241	100.0	22.8	70.9	43.9	22.8	114
3.95	235	235	99.0	21.7	70.3	42.9	21.5	111
4.00	229	229	98.2	20.5	69.7	41.9	20.1	109
4.05	223	223	97.3	...	...	...	...	104
4.10	217	217	96.4	...	...	...	...	103
4.15	212	212	95.5	...	...	...	...	100
4.20	207	207	94.6	...	...	...	...	99
4.25	201	201	93.8	...	...	...	...	97
4.30	197	197	92.8	...	...	...	...	94
4.35	192	192	91.9	...	...	...	...	92
4.40	187	187	90.7	...	...	...	...	90
4.45	183	183	90.0	...	...	...	...	89
4.50	179	179	89.0	...	...	...	...	88
4.55	174	174	87.8	...	...	...	...	86
4.60	170	170	86.8	...	...	...	...	84
4.65	167	167	86.0	...	...	...	...	83
4.70	163	163	85.0	...	...	...	...	82
4.80	156	156	82.9	...	...	...	...	80
4.90	149	149	80.8	...	...	...	...	78
5.00	143	143	78.7	...	...	...	...	71
5.10	137	137	76.4	...	...	...	...	67
5.20	131	131	74.0	...	...	...	...	65
5.30	126	126	72.0	...	...	...	...	63
5.40	121	121	69.0	...	...	...	...	60
5.50	116	116	67.6	...	...	...	...	58
5.60	111	111	65.7	...	...	...	...	56

[a] This table gives the approximate relationship of Brinell and Rockwell hardness values and corresponding approximate tensile strengths of steel. It is possible that steels of various compositions and processing histories will deviate in hardness-tensile strength relationship from the data presented in this table. The data in this table do not represent a conversion from hardness to approximate tensile strength for the austenitic, ferritic, or martensitic stainless steels. Where more precise conversions are required, they should be developed specially for each steel composition, heat treatment, and part. The last eight values in the column of Approximate Tensile Strengths are carried over from the previous issue of this method published under the designation A 370 – 54 T.

[b] See Note under Table IV.

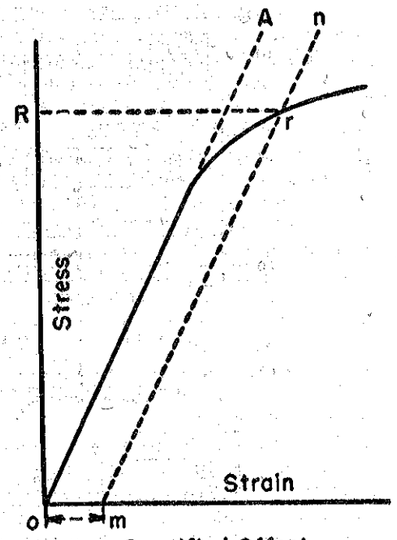

FIG. 10.—Stress-Strain Diagram for Determination of Yield Strength by the Offset Method.

Scale Symbol	Penetrator	Major Load, kg	Minor Load, kg
B	1/16-in. steel ball	100	10
C	Diamond brale	150	10

Rockwell superficial hardness machines are used for the testing of very thin steel or thin surface layers. Loads of 15, 30, or 45 kg are applied on a hardened steel ball or diamond penetrator, to cover the same range of hardness values as for the heavier loads. The superficial hardness scales are as follows:

Scale Symbol	Penetrator	Major Load, kg	Minor Load, kg
15T	1/16-in. steel ball	15	3
30T	1/16-in. steel ball	30	3
45T	1/16-in. steel ball	45	3
15N	Diamond brale	15	3
30N	Diamond brale	30	3
45N	Diamond brale	45	3

(*b*) *Reporting Hardness.*—In reporting hardness values, the scale symbol should always precede the hardness number, B96, C40, 15N75, or 30T77.

(*c*) *Test Blocks.*—Machines should be checked to make certain they are in good order by means of standardized Rockwell test blocks.

(*d*) *Detailed Procedure.*—For detailed requirements of this test, reference shall be made to the latest revision of the Standard Methods of Test for Rockwell Hardness and Rockwell Superficial Hardness of Metallic Materials (ASTM Designation: E 18).

IMPACT TESTING

Description

22. An impact test is a dynamic test in which a selected specimen, machined or surface ground and usually notched, is struck and broken by a single blow in a specially designed testing machine and the energy absorbed in breaking the specimen is measured. The energy values determined are qualitative comparisons on a selected specimen and cannot be converted into energy figures that would serve for engineering design calculations. The notch behavior indicated in an individual test applies only to the specimen size, notch geometry, and testing conditions involved and cannot be applied to other sizes of specimens and conditions. Minimum impact requirements are generally specified only for quenched and tempered, normalized and tempered or normalized materials, as provided in the appropriate product specifications.

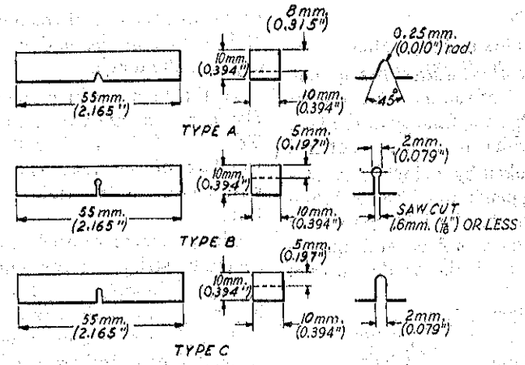

NOTE.—Permissible variations shall be as follows:

Adjacent sides shall be at	90 deg ± 10 min
Cross-section dimensions	±0.025 mm (0.001 in.)
Length of specimen	+0, −2.5 mm (0.100 in.)
Angle of notch	±1 deg
Radius of notch	±0.025 mm (0.001 in.)
Dimensions to bottom of notch:	
Specimen, type A	8 ± 0.025 mm (0.315 ± 0.001 in.)
Specimen, types B and C	5 ± 0.05 mm (0.197 ± 0.002 in.)

FIG. 11.—Simple Beam Impact Test Specimens, Types A, B, and C.

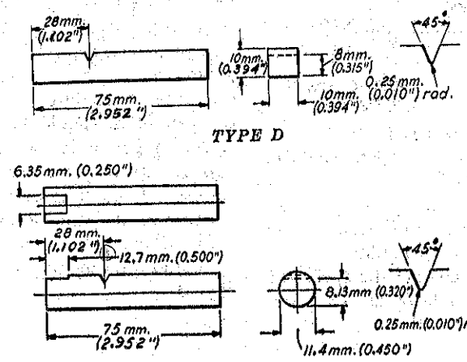

NOTE.—Permissible variations shall be as follows:

Cross-section dimensions	±0.025 mm (0.001 in.)
Length of specimen	+0, −2.5 mm (0.100 in.)
Angle of notch	±1 deg
Radius of notch	±0.025 mm (0.001 in.)
Dimension to bottom of notch:	
Square	8 ± 0.025 mm (0.315 ± 0.001 in.)
Round	8.13 ± 0.0025 mm (0.320 ± 0.001 in.)

FIG. 12.—Cantilever Beam Impact Test Specimens, Types D and E.

Test Specimens

23. (*a*) *Selection and Number of Tests.*—Unless otherwise specified, the following procedure shall apply: Longitudinal test specimens shall be used. Each impact test shall consist of the average value of three specimens, with not more than one value below the specified minimum, but in no case below two-thirds of the specified minimum. If more than one value is below the specified minimum, or if one value is below two-thirds of the specified minimum, a retest of three additional specimens shall be made, each of which must have a value equal to or exceeding the specified minimum.

(*b*) *Size of Test Specimen:*

(*1*) *Charpy Test.*—The desired type of specimen: Charpy V-notch, type *A*; Charpy keyhole notch, type *B*; or Charpy U-notch, type *C*; as shown in Fig. 11, should be specified in conjunction with the appropriate material specification. All specimens shall be tested in a Charpy pendulum-type testing machine. The Charpy keyhole and U-notch specimens should give equivalent results if they are properly prepared. The standard keyhole notch 10 by 10 mm specimen, type B, (Fig. 11) shall be used where the thickness is 7/16 in. or greater. For material under 7/16 in. subsize test specimens shall be used with the tolerances shown in Fig. 11 applicable. The sub-size specimens shall be machined to the following dimensions:

10 mm by 7.5 mm
10 mm by 5 mm
10 mm by 2.5 mm

The base of the notch shall be perpendicular to the 10 mm wide face.

(*2*) *Izod Test.*—The V-notch Izod test specimens, either square or round, as shown in Fig. 12 shall be used for Izod impact testing. All specimens shall be tested in an Izod pendulum-type testing machine.

(*c*) *Preparation of Test Specimens.*—The base of the notch shall be perpendicular to the surface of the specimen. Particular attention should always be paid to the machining of notches as it has been demonstrated that extremely minor notch variations may result in very erratic test data.

Keyhole notches shall be made by

drilling the round hole and cutting the slot by any feasible means. The drilling must be done carefully with a slow feed. Care must be exercised in cutting the slot to see that the surface of the drilled hole is not damaged.

U-notches shall be made in the same manner and with the same precautions, except that the width of the slot shall be made equal to the diameter of the hole; or they may be made in one operation by a formed milling cutter or grinding wheel. In this latter method, which is also used for V-notches of Charpy or Izod specimens, tool marks at the bottom of the notch must be carefully avoided.

(*d*) *Aging of Test Specimens.*—Unless otherwise specified, it shall be permissible to age impact test specimens. The time-temperature cycle employed must be such that the effects of previous processing will not be materially changed. It may be accomplished by aging at room temperature 24 to 48 hr, or in shorter time at moderately elevated temperatures by boiling in water, heating in oil, or in an oven.

(*e*) *Effect of Temperature.*—The effect of variations in temperature on this test is sometimes very great and this variable shall be controlled. The temperature at which the test is conducted shall be recorded. Tests are often specified to be run at low temperatures. These low temperatures can be readily obtained in the laboratory by the use of tap water, chilled water, melting ice, and freezing mixtures. For tests well below normal, the test temperature may be secured by some means such as dry ice plus acetone or by liquid nitrogen. Unless otherwise specified, when carrying out tests at these low temperatures, the test bars shall be held at the temperature specified for at least 15 min or until the temperature is equalized throughout the specimen. When tested, they shall be inserted in the machine and broken within 5 sec so as to minimize the change of temperature prior to breaking. For elevated temperature tests the specimens may be immersed in an agitated oil bath or in a furnace or oven until they have equalized throughout at the test temperature. The actual temperature of the specimen shall be recorded for each test. This temperature shall be that of the liquid medium or the furnace.

Testing Apparatus and Operation

25. (*a*) *General Characteristics of Different Types of Machines.*—An impact machine of either the Charpy or the Izod type is a machine in which a notched specimen is broken by a single blow of a freely swinging pendulum. The pendulum is released from a fixed height, so that the energy of the blow is fixed and known. The height to which the pendulum rises in its swing after breaking the specimen is measured and used to determine the residual energy of the pendulum.

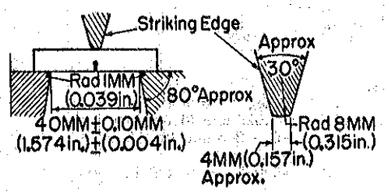

(*a*) Charpy Test.

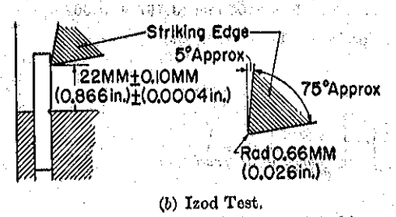

(*b*) Izod Test.

FIG. 13.—Dimensions of Impact Machines Striking Edge and Supports.

In the Charpy machine the specimen is supported horizontally as a simple beam with the axis of the notch vertical. It is struck in the middle on the face opposite the notch.

In the Izod machine the specimen is clamped in a vise with its axis vertical. The root of the notch is flush with the top face of the vise. The specimen is struck near the free end on the notched face.

Charpy machines used in testing steel generally strike the specimen with an energy of from 220 to 265 ft-lb and a linear velocity at the point of impact of 16 to 19 ft per sec. Sometimes machines of lighter capacity are used. Izod machines usually strike with an energy of 120 ft-lb and a linear velocity at the point of impact of 10 to 12 ft per sec.

(*b*) *Calibration (Accuracy and Sensitivity).*—Impact machines shall be calibrated and adjusted in accordance with Sections 17 to 28 of the Methods of Impact Testing of Metallic Materials (ASTM Designation: E 23) or the corresponding sections of later revisions. The indicator, should have an error not greater than 1 ft-lb as calibrated by the prescribed procedure. The dimensions of the pendulum should be such that the center of percussion is at the point of impact with an error not greater than 1 per cent of the distance from the axis of rotation to the point of impact.

The dimensions of the specimen supports and striking edge shall conform to Fig. 13.

TABLE IV.—APPROXIMATE HARDNESS - TENSILE STRENGTH RELATIONSHIP (ROCKWELL C SCALE) BELOW ROCKWELL C40.

Rockwell Hardness Number	Tensile Strength (Approx) 1000 psi	Rockwell Hardness Number	Tensile Strength (Approx) 1000 psi	Rockwell Hardness Number	Tensile Strength (Approx) 1000 psi	Rockwell Hardness Number	Tensile Strength (Approx) 1000 psi
41.8	195	35.5	166	29.9	141	24.2	122
40.4	188	34.3	160	28.8	137	22.8	118
39.1	182	33.1	155	27.6	133	21.7	115
37.9	176	32.1	150	26.6	129	20.5	111
36.6	170	30.9	145	25.4	126		

NOTE.—The hardness - tensile strength relationship given in Table III is the same as that given in the Federal Specification FTMS – 151a. Table IV gives for information this relationship below Rockwell C40 as published in the preceding issue, A 370 – 54 T and in the SAE and ASM Handbooks. Preliminary data from investigations now underway by a Joint ASTM-SAE Task Group indicate that the best approximation for heat-treated steels below Rockwell C40 may lie between the curves on which Tables III and IV are based, favoring Table III near Rockwell C38, and favoring Table IV near Rockwell C25.

SUPPLEMENT I

STEEL BAR PRODUCTS

Scope

B 1. This supplement delineates only those details which are peculiar to hot-rolled and cold-finished steel bars and are not covered in the general section of these methods.

Orientation of Test Specimens

B 2. (*a*) Carbon steel bars and bar size shapes, due to their relatively small cross-sectional dimensions, are customarily tested in the longitudinal direction.

(*b*) Alloy steel bars and bar-size shapes are usually tested in the longitudinal direction. In special cases where size permits and the fabrication or service of a part justifies testing in a transverse direction, the selection and location of test or tests are a matter of agreement between the manufacturer and the purchaser.

Tension Test

B 3. (*a*) *Carbon Steel Bars.*—Carbon steel bars are not commonly specified to tensile requirements in the as-rolled condition for sizes of rounds, squares, hexagons, and octagons under ½ in. in diameter or distance between parallel faces nor for other bar-size sections, other than flats, less than 1 sq in. in cross-sectional area.

(*b*) *Alloy Steel Bars.*—Alloy steel bars are usually not tested in the as-rolled condition.

(*c*) When tension tests are specified, the recommended practice for selecting test specimens for hot-rolled and cold-finished steel bars of various sizes shall be in accordance with Table B-II, unless otherwise specified.

Bend Test

B 4. When bend tests are specified, the recommended practice for hot-rolled and cold-finished steel bars shall be in accordance with Table B-I.

TABLE B-I.—RECOMMENDED PRACTICE FOR SELECTING BEND TEST SPECIMENS.

FLATS

Thickness, In.	Width, In.	Recommended Size
Up to ½, incl.	Up to ¾, incl.	Full section.
	Over ¾	Full section or machine to not less than ¾ in. in width by thickness of specimen.
Over ½	All	Full section or machine to 1 by ½ in. specimen from midway between center and surface.

ROUNDS, SQUARES, HEXAGONS, AND OCTAGONS

Diameter or Distance Between Parallel Faces, In.	Recommended Size
Up to 1½, incl.	Full section.
Over 1½	Machine to 1 by ½ in. specimen from midway between center and surface.

NOTE 1.—The length of all specimens is to to be not less than 6 in.

NOTE 2.—The edges of the specimen may be rounded to a radius not exceeding 1/16 in.

TABLE B-II.—RECOMMENDATIONS FOR SELECTING TENSION TEST SPECIMENS.

Thickness, in.	Width, in.	Hot-Rolled Bars	Cold-Finished Bars
Flats			
Under 5/8	Up to 1 1/2, incl.	Full section by 8-in. gage length.	Mill reduced section to 2-in. gage length and approximately 25 per cent less than test specimen width.
	Over 1 1/2	Full Section, or mill to 1 1/2 in. wide by 8-in. gage length (Fig. 4).	Mill reduced section to 2-in. gage length and 1 1/2 in. wide.
5/8 to 1 1/2, excl.	Up to 1 1/2, incl.	Full section by 8-in. gage length or machine standard 1/2 by 2-in. gage length specimen from center of section (Fig. 6).	Mill reduced section to 2-in. gage length and approximately 25 per cent less than test specimen width or machine standard 1/2 by 2-in. gage length specimen from center of section (Fig. 6).
	Over 1 1/2	Full Section, or mill 1 1/2 in. width by 8-in. gage length (Fig. 4) or machine standard 1/2 by 2-in. gage length specimen from midway between edge and center of section (Fig. 6).	Mill reduced section to 2-in. gage length and 1 1/2 in. wide or machine standard 1/2 by 2-in. gage length specimen from midway between edge and center of section (Fig. 6).
1 1/2 and over		Full section by 8-in. gage length, or machine standard 1/2 by 2-in. gage length specimen from midway between surface and center (Fig. 6).	Machine standard 1/2 by 2-in. gage length specimen from midway between surface and center (Fig. 6).
Rounds, Squares, Hexagons, and Octagons			
Diameter or Distance Between Parallel Faces, in.		Hot-Rolled Bars	Cold-Finished Bars
Under 5/8		Full section by 8-in. gage length or machine to sub-size specimen (Fig. 6).	Machine to sub-size specimen (Fig. 6).
5/8 to 1 1/2, excl.		Full section by 8-in. gage length or machine standard 1/2 in. by 2-in. gage length specimen from center of section (Fig. 6).	Machine standard 1/2 in. by 2-in. gage length specimen from center of section (Fig. 6).
1 1/2 and over		Full section by 8-in. gage length or machine standard 1/2 in. by 2-in. gage length specimen from midway between surface and center of section (Fig. 6).	Machine standard 1/2 in. by 2-in. gage length specimen from midway between surface and center of section (Fig 6).
Other Bar-Size Sections			
All sizes		Full section by 8-in. gage length or prepare test specimen 1 1/2 in. wide (if possible) by 8-in. gage length.	Mill reduced section to 2-in. gage length and approximately 25 per cent less than test specimen width.

Note 1.—For bar sections where it is difficult to determine the cross-sectional area by simple measurement, the area in square inches may be calculated by dividing the weight per linear inch of specimen in pounds by 0.2833 (weight of 1 cu in. of steel) or by dividing the weight per linear foot of specimen by 3.4 (weight of steel 1 in. square and 1 ft long).

SUPPLEMENT II

Steel Tubular Products

Scope

T 1. This supplement covers definitions and methods of testing peculiar to tubular products which are not covered in the general section of these methods.

Tension Test

T 2. (*a*) *Longitudinal Test Specimens.*—It is standard practice to use tension test specimens of full-size tubular sections within the limit of the testing equipment (see Fig. T 3(*d*)). Snug fitting metal plugs should be inserted far enough in the end of such tubular specimens to permit the testing machine jaws to grip the specimens properly without crushing. A design that may be used for such plugs is shown in Fig. T 1. The plugs shall not extend into that part of the specimen on which the elongation is measured (see Fig. T 1). Care should be exercised to see that insofar as practicable, the load in such cases is applied axially. The length of the full-section specimen depends on the gage length prescribed for measuring the elongation.

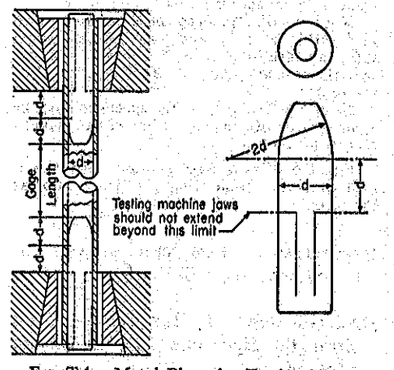

Fig. T 1.—Metal Plugs for Testing Tubular Specimens, Proper Location of Plugs in Specimen and of Specimen in Heads of Testing Machine.

Normally the gage length for furnace-welded pipe is 8 in., except that for nominal sizes 3/4 in. and smaller, the gage length shall be as follows:

Nominal Size, in.	Gage Length, in.
3/4 and 1/2	6
3/8 and 1/4	4
1/8	2

For seamless and electric-welded pipe and tubes the gage length is 2 in. However, for tubing having an outside diameter of 3/8 in. or less, *it is customary to use a gage length equal to four times the outside diameter* when elongation values comparable to larger specimens are required.

To determine the cross-sectional area of the full-section specimen, measurements shall be recorded as the average

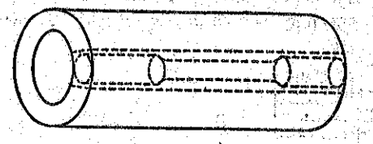

Fig. T 2.—Location of Longitudinal Tension Test Specimens in Large Diameter Tubing.

or mean between the greatest and least measurements of the outside diameter and the average or mean wall thickness, to the nearest 0.001 in. and the cross-sectional area is determined by the following formula:

$$A = 3.1416t(D - t)$$

where:
A = sectional area in square inches,
D = outside diameter in inches, and
t = thickness of tube wall in inches.

Note.—There exist other methods of cross-sectional area determination, such as by weighing of the specimens, which are equally accurate or appropriate for the purpose.

(*b*) *Longitudinal Strip Test Specimens.*—For larger sizes of tubular products which cannot be tested in full-section,

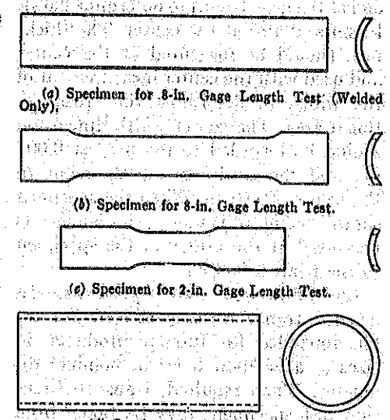

(*a*) Specimen for 8-in. Gage Length Test (Welded Only).

(*b*) Specimen for 8-in. Gage Length Test.

(*c*) Specimen for 2-in. Gage Length Test.

(*d*) Specimen for Full-Section Test.

Fig. T 3.—Longitudinal Tension Test Specimens for Large Diameter Tubing.

longitudinal test specimens are obtained from strips cut from the tube or pipe as indicated in Fig. T 2. For furnace-welded tubes or pipe the 8-in. gage length specimen as shown in Fig. T 3(*b*), or with both edges parallel as in Fig. T 3(*a*) is standard, the specimen being located at approximately 90 deg from the weld. For seamless and electric-welded tubes or pipe, the 2-in. gage length specimen as shown in Fig. T 3(*c*) is standard, the specimen being located approximately 90 deg from the weld in the case of electric-welded tubes. The specimen shown in Fig. T 3(*a*) may be used as an alternate for seamless and electric-welded tubes or pipe. Specimens of the type shown in Fig. T 3(*a*), (*b*), (*c*), may be tested with grips having a surface contour corresponding to the curvature of the tubes. When grips with curved faces are not available, the ends of the specimens may be flattened without heating. Standard tension test specimens, as shown in specimen No. 4 of Fig. T 4, are nominally 1 1/2 in. wide in the gage length section.

When sub-size specimens are necessary due to the dimensions and character of the material to be tested, specimens No. 1, 2, or 3 shown in Fig. T 4 where applicable, are considered standard. For tubes ¾ in. and over in wall thickness, the test specimen shown in Fig. 6[6] may be used.

The width should be measured at each end of the gage length to determine parallelism and also at the center. The thickness should be measured at the center and used with the center measurement of the width to determine the cross-sectional area. The center width dimension should be recorded to the nearest 0.005 in., and the thickness measurement to the nearest 0.001 in. When the specimen shown in Fig. 6[6] is used, the diameter is measured at the center of the specimen to the nearest 0.001 in.

(*c*) *Transverse Test Specimens.*—In general, transverse tension tests are not recommended for tubular products, in sizes smaller than 8 in. in nominal diameter. When required, transverse tension test specimens may be taken from

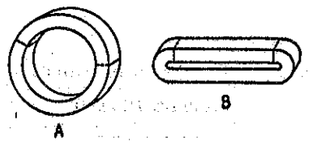

FIG. T 5.—Location of Transverse Tension Test Specimens in Ring Cut from Tubular Products.

rings cut from ends of tubes or pipe as shown in Fig. T 5. Flattening of the specimen may be done either after separating it from the tube as in Fig. T 5(*a*), or before separating it as in Fig. T 5(*b*), and may be done hot or cold; but if the flattening is done cold, the specimen may subsequently be normalized. Specimens from tubes or pipe for which heat treatment is specified, after being flattened either hot or cold, shall be given the same treatment as the tubes or pipe. For tubes or pipe having a wall thickness of less than ¾ in., the transverse test specimen shall be of the form and dimensions shown in Fig. T 6 and either or both surfaces may be machined to secure uniform thickness. For tubes having a sufficiently heavy wall thickness the test specimen shown in Fig. 6[6] may be used.

[6] Standard round tension test specimen with 2-in. gage length.

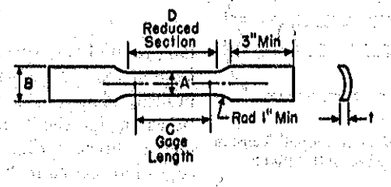

Specimen No.	Dimensions, in.			
	A	*B*	*C*	*D*
1	½ ± 0.015	1 1/16 approximately	2 ± 0.005	2¼ min
2	¾ ± 0.031	1 approximately	2 ± 0.005 4 ± 0.005	2¼ min 4½ min
3	1 ± 0.062	1½ approximately	2 ± 0.005 4 ± 0.005	2¼ min 4½ min
4	1½ ± ⅛	2 approximately	2 ± 0.010 4 ± 0.015 8 ± 0.020	2¼ min 4½ min 9 min

NOTE 1.—Cross-sectional area may be calculated by multiplying *A* and *t*.
NOTE 2.—The dimension *t* is the thickness of the test specimen as provided for in the applicable material specifications.
NOTE 3.—The reduced section shall be parallel within 0.010 in. and may have a gradual taper in width from the ends toward the center, with the ends not more than 0.010 in. wider than the center.
NOTE 4.—The ends of the specimen shall be symmetrical with the center line of the reduced section within 0.10 in.

FIG. T 4.—Dimensions and Tolerances for Longitudinal Tension Test Specimens for Large Diameter Tubing.

The elongation requirements for the 2-in. gage length in the product specification shall apply to the gage length as specified in Fig. 6. Specimens for transverse tension tests on welded steel tubes or pipe to determine strength of welds, shall be located perpendicular to the welded seams with the weld at about the middle of their length.

The width should be measured at each end of the gage length to determine parallelism and also at the center. The thickness should be measured at the center and used with the center measurement of the width to determine the cross-sectional area. The center width dimension should be recorded to the nearest 0.005 in., and the thickness measurement to the nearest 0.001 in. When the specimen shown in Fig. 6[6] is used, the diameter is measured at the center of the specimen to the nearest 0.001 in.

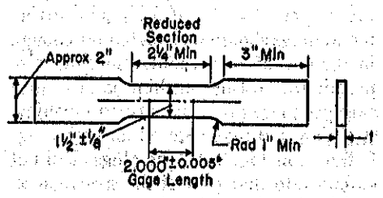

NOTE 1.—The dimension *t* is the thickness of the test specimen as provided for in the applicable material specifications.
NOTE 2.—The reduced section shall be parallel within 0.010 in. and may have a gradual taper in width from the ends toward the center, with the ends not more than 0.010 in. wider than the center.
NOTE 3.—The ends of the specimen shall be symmetrical with the center line of the reduced section within 0.10 in.

FIG. T 6.—Transverse Tension Test Specimen Machined from Ring Cut from Tubular Products.

Determination of Transverse Yield Strength, Hydraulic Ring-Expansion Method

T 3. (*a*) Until recently, the transverse yield strength, when required on tubular products, has been determined, as described in the general section of these methods, from standard tension test coupons cut transversely from the tubular sections. Due to the curvature on such coupons it is necessary to cold straighten them. It has long been recognized that the cold work introduced by

straightening changes the mechanical properties so that the yield strength obtained is not truly representative of the yield strength in the original tubular section. The transverse yield strength is highly important on some classes of tubular products, such as line pipe, and a method for determining the true yield strength has been desirable for some time.

(*b*) A testing machine and method for determining the transverse yield strength from an annular ring specimen, have been developed and are described in the following paragraphs (*c*) to (*e*), inclusive.

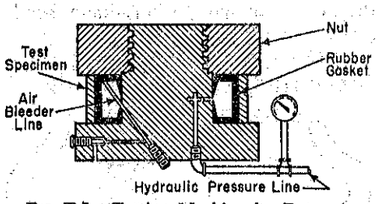

FIG. T 7.—Testing Machine for Determination of Transverse Yield Strength from Annular Ring Specimens.

(*c*) A diagrammatic vertical cross-sectional sketch of the testing machine is shown in Fig. T 7.

(*d*) In determining the transverse yield strength on this machine, a short ring (commonly 3 in. in length) test specimen is used. After the large circular nut is removed from the machine, the wall thickness of the ring specimen is determined and the specimen is telescoped over the oil resistant rubber gasket. The nut is then replaced, but is not turned down tight against the specimen. A slight clearance is left between the nut and specimen for the purpose of permitting free radial movement of the specimen as it is being tested. Oil under pressure is then admitted to the interior of the rubber gasket through the pressure line under the control of a suitable valve. An accurately calibrated pressure gage serves to measure oil pressure. Any air in the system is removed through the bleeder line. As the oil pressure is increased, the rubber gasket expands which in turn stresses the specimen circumferentially. As the pressure builds up, the lips of the rubber gasket act as a seal to prevent oil leakage. With continued increase in pressure, the ring specimen is subjected to a tension stress and elongates accordingly. The entire outside circumference of the ring specimen is considered as the gage length and the strain is measured with a suitable extensometer which will be described later. When the desired total strain or extension under load is reached on the extensometer, the oil pressure in pounds per square inch is read and by employing Barlow's formula, the unit yield strength is calculated. The yield strength, thus determined, is a true result since the test specimen has not been cold worked by flattening and closely approximates the same condition as the tubular section from which it is cut. Further, the test closely simulates service conditions in pipe lines. One testing machine unit may be used for several different sizes of pipe by the use of suitable rubber gaskets and adapters.

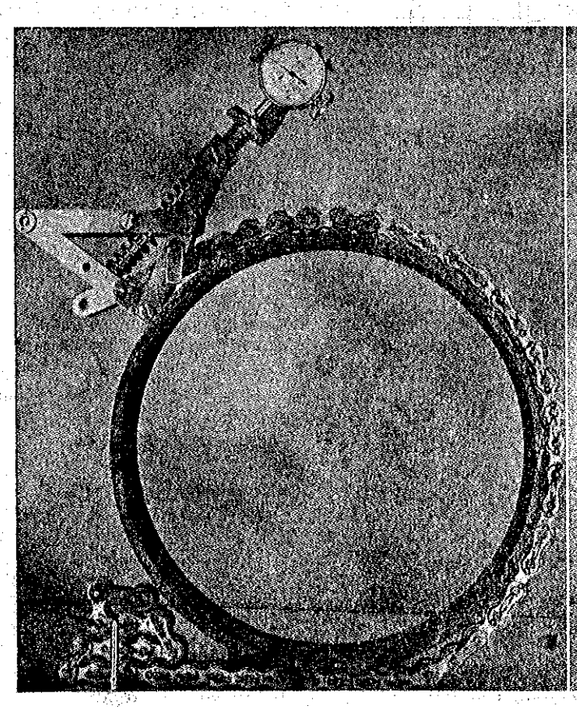

FIG. T 8.—Roller Chain Type Extensometer, Unclamped.

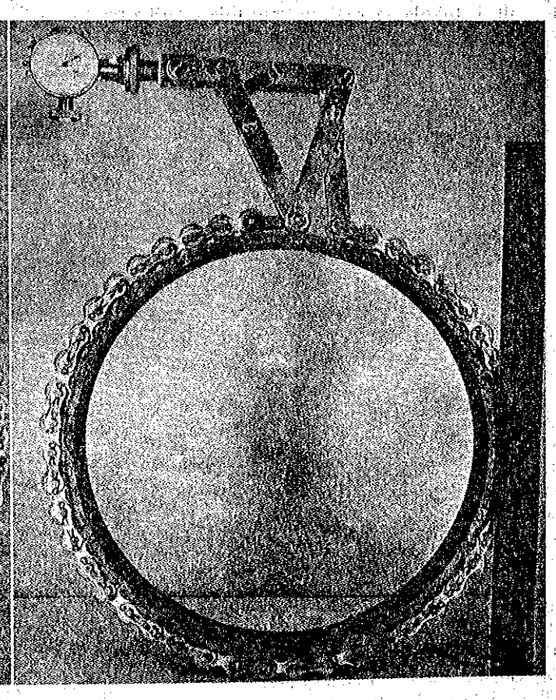

FIG. T 9.—Roller Chain Type Extensometer, Clamped.

(*e*) A roller chain type extensometer which has been found satisfactory for measuring the elongation of the ring specimen is shown in Figs. T 8 and T 9. Figure T 8 shows the extensometer in position, but unclamped, on a ring specimen. A small pin, through which the strain is transmitted to and measured by the dial gage, extends through the hollow threaded stud. When the extensometer is clamped, as shown in Fig. T 9, the desired tension which is necessary to hold the instrument in place and to remove any slack, is exerted on the roller chain by the spring. Tension on the spring may be regulated as desired by the knurled thumb screw. By removing or adding rollers, the roller chain may be adapted for different sizes of tubular sections.

Hardness Tests

T 4. (*a*) Hardness tests are made either on the outside or the inside surfaces on the end of the tube as appropriate.

(*b*) The standard 3000-kg Brinell load may cause too much deformation in a thin-walled tubular specimen. In this case the 500-kg load shall be applied, or inside stiffening by means of an internal anvil should be used. Brinell testing shall not be applicable to tubular products less than 2 in. in outside diameter, or less than 0.200 in. in wall thickness.

TABLE T-I.—WALL THICKNESS LIMITATIONS OR SUPERFICIAL HARDNESS TEST.

Annealed or Ductile (Soft) Material "T" Scale ($\frac{1}{16}$ in. Ball).

Wall Thickness, in.	Load, kg
Over 0.050 to 0.065, incl.	45
Over 0.035 to 0.050, incl.	30
0.020 to 0.035, incl.	15

(*c*) The Rockwell hardness tests are normally made on the inside surface or the outside surface of the tube. The curvature and the wall thickness of the specimen impose imitations on this hardness test. Rockwell hardness tests are not performed on tubes smaller than $\frac{5}{16}$ in. in outside diameter, or $\frac{1}{4}$ in. in inside diameter, or lighter than 0.065 in. wall (annealed material), or lighter than 0.049 in wall (for harder material).

(*d*) Superficial Rockwell hardness tests shall be performed on tubing greater than 0.25 in. inside diameter and with wall thicknesses between 0.020 in. to 0.065 in., in accordance with Table T I.

(*e*) When the outside diameter, inside diameter, or wall thickness precludes the obtaining of accurate hardness values, tubular products shall be specified to tensile properties and so tested.

Manipulating Tests

T 5. The following tests are made to prove ductility of certain tubular products:

(*a*) *Flattening Test.*—The flattening test as commonly made on specimens cut from tubular products is conducted by subjecting rings from the tube or pipe to a prescribed degree of flattening between parallel plates (see Fig. T 5). The severity of the flattening test is measured by the distance between the parallel plates and is varied according to the dimensions of the tube or pipe. The flattening test specimen should not be less than 2½ in. in length and should be flattened cold to the extent required by the applicable material specifications.

(*b*) *Reverse Flattening Test.*—The reverse flattening test is designed primarily for application to electric-welded tubing for the detection of lack of penetration or overlaps resulting from flash removal in the weld. The specimen consists of a length of tubing approximately 4 in. long which is split longitudinally 90 deg on each side of the weld. The sample is then opened and flattened with the weld at the point of maximum bend (see Fig. T 10).

(*c*) *Crush Test.*—The crush test, sometimes referred to as an upsetting test, is

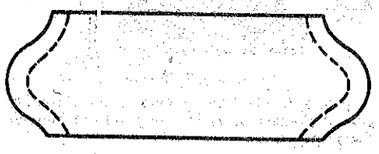

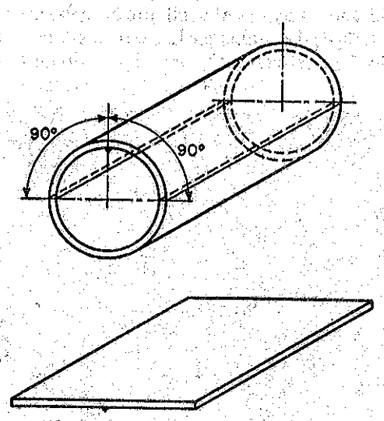

FIG. T 10.—Reverse Flattening Test.

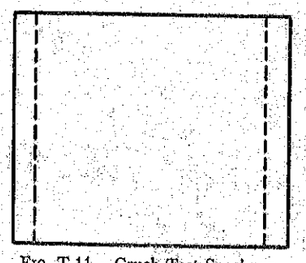

FIG. T 11.—Crush Test Specimen.

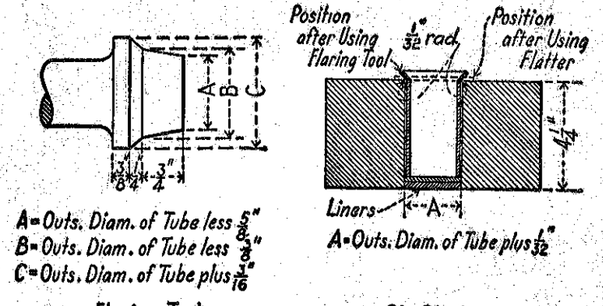

FIG. T 12.—Flaring Tool and Die Block for Flange Test.

usually made on boiler and other pressure tubes, for evaluating ductility (see Fig. T 11). The specimen is a ring cut from the tube, usually about 2½ in. long. It is placed on end and crushed endwise by hammer or press to the distance prescribed by the applicable material specifications.

(*d*) *Flange Test.*—The flange test is intended to determine the ductility of boiler tubes and their ability to withstand the operation of bending into a tube sheet. The test is made on a ring cut from a tube, usually not less than 4 in. long and consists of having a flange turned over at right angles to the body of the tube to the width required by the applicable material specifications. The flaring tool and die block shown in Fig. T 12 are recommended for use in making this test.

(*e*) *Flaring Test.*—For certain types of pressure tubes, an alternate to the flange test is made. This test consists of driving a tapered mandrel having a slope of 1 in 10 as shown in Fig. T 13(*a*) or a 60 deg included angle as shown in Fig. T 13(*b*) into a section cut from the tube, approximately 4 in. in length, and thus expanding the specimen until the inside diameter has been increased to the extent required by the applicable material specifications.

(*f*) *Bend Test.*—For pipe used for coiling in sizes 2 in. and under a bend test is made to determine its ductility and the soundness of weld. In this test a sufficient length of full-size pipe is bent cold through 90 deg around a cylindrical mandrel having a diameter 12 times the nominal diameter of the pipe. For close coiling, the pipe is bent cold through 180 deg around a mandrel

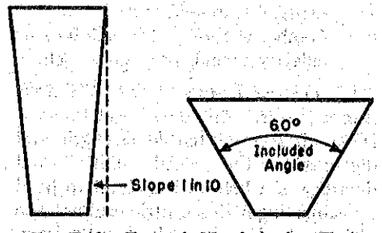

FIG. T 13.—Tapered Mandrels for Flaring Test.

having a diameter 8 times the nominal diameter of the pipe.

(*g*) *Transverse Guided Weld Bend Test.*—This bend test is used to determine the ductility of fusion welds. The specimens used are approximately 1½ in. wide, at least 6 in. in length with the weld at the center, and are machined in accordance with Fig. T-14. The dimensions of the plunger shall be as shown in Fig. T-15 and the other dimensions of the bending jig shall be substantially as given in this same figure. At least two specimens shall be used for this test. One shall be bent with the inside surface of the pipe against the plunger, and the other with the outside surface against the plunger; these are designated as face bend test and root bend test, respectively.

Failure of the bend test depends upon the appearance of cracks in the area of the bend, of the nature and extent described in the product specifications.

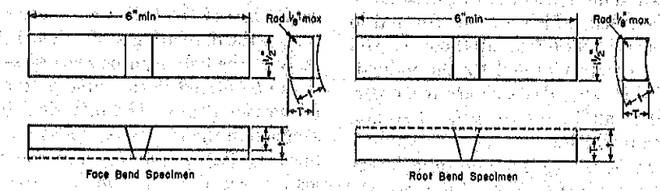

Pipe Wall Thickness (*t*), in.	Test Specimen Thickness, in.
Up to 3/8, incl.	*t*
Over 3/8	3/8

FIG. T-14.—Transverse Face- and Root-Bend Test Specimens.

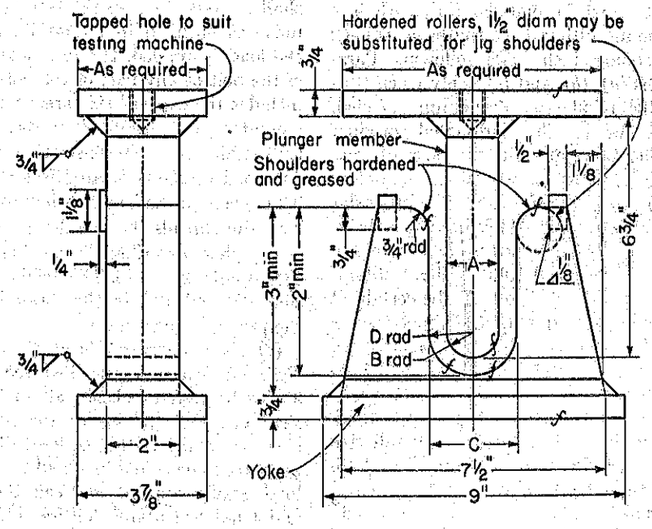

Test Specimen Thickness, in.	A	B	C	D
3/8	1½	3/4	2 3/8	1 13/16
t	4*t*	2*t*	6*t* + 1/8	3*t* + 1/16

FIG. T-15.—Guided-Bend Test Jig.

SUPPLEMENT III

STEEL FASTENERS

Scope

F 1. (*a*) This supplement covers definitions and methods of testing peculiar to steel fasteners which are not covered in the general section of Methods A 370. Standard tests required by the individual product specifications are to be performed as outlined in the general section of these methods.

(*b*) These tests are set up to facilitate production control testing and acceptance testing with certain more precise tests to be used for arbitration in case of disagreement over test results.

Tension Tests

F 2. It is preferred that bolts be tested full size, and it is customary, when so testing bolts to specify a minimum ultimate load in pounds, rather than a minimum ultimate strength in pounds per square inch. The following Paragraphs (*a*), (*b*), and (*c*) apply when testing bolts full size. Paragraph (*d*) shall apply where the individual product specifications permit the use of machined specimens.

(*a*) *Proof Load.*—Due to particular uses of certain classes of bolts it is desirable to be able to stress them, while in use, to a specified value without obtaining any permanent set. To be certain of obtaining this quality the proof load is specified. The proof load test consists of stressing the bolt with a specified load which the bolt must withstand without permanent set. An alternate test which determines yield strength of a full size bolt is also allowed. Either of the following Methods, 1 or 2, may be used but Method 1 shall be the arbitration method in case of any dispute as to acceptance of the bolts.

Method 1, Length Measurement.—The overall length of a straight bolt shall be measured at its true center line with an instrument capable of measuring changes in length of 0.0001 in. with an accuracy of 0.0001 in. in any 0.001-in. range. The preferred method of measuring the length shall be between conical centers on the center line of the bolt, with mating centers on the measuring anvils. The head or body of the bolt shall be marked so that it can be placed in the same position for all measurements. The bolt shall be assembled in the testing equipment as outlined in Paragraph (*b*), and the proof load specified in the product specification shall be applied. Upon release of this load the length of the bolt shall be again measured and shall show no permanent elongation. A tolerance of ±0.0005 in. shall be allowed between the measurement made before loading and that made after loading.

Method 2, Yield Strength.—The bolt shall be assembled in the testing equipment as outlined in Paragraph (*b*). As the load is applied, the total elongation of the bolt or any part of the bolt which includes the exposed six threads shall be measured and recorded to produce a load-strain or a stress-strain diagram. The load or stress at an offset equal to 0.2 per cent of the length of bolt occupied by 6 full threads shall be determined by the method described in Section 14 of these methods, A 370. This load or stress shall not be less than that prescribed in the product specification.

(*b*) *Axial Tension Testing of Full Size Bolts.*—When it is specified that bolts are to be tested full size all such bolts shall be so tested up to the practical capacity of the testing equipment. Such bolts are to be tested in a holder with the load axially applied between the head and a nut or suitable fixture (Fig. F 1), either of which shall have sufficient thread engagement to develop the full strength of the bolt. The nut or fixture shall be assembled on the bolt leaving six complete bolt threads unengaged between the grips. To meet the requirements of this test there shall be a tensile

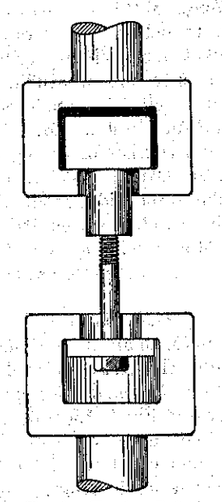

FIG. F 1.—Tension Testing Full-Size Bolt.

failure in the body or threaded section with no failure at the junction of the body and head. If it is necessary to record or report the tensile strength of bolts as psi values the stress area shall be calculated from the mean of the mean root and pitch diameters of class 3 external threads.

$$A_s = 0.7854\left(D - \frac{0.9743}{n}\right)^2$$

where:

D = nominal diameter, and
n = number of threads per inch for calculating pounds per square inch.

(*c*) *Tension Testing of Full Size Bolts with a Wedge.*—The purpose of this test is to obtain the tensile strength and demonstrate the "head quality" and ductility of a bolt with a standard head by subjecting it to eccentric loading. The ultimate load on the bolt shall be determined as described in Paragraph (*b*), except that a 10-deg wedge shall be placed under the bolt head. This test shall be

performed using the same bolt previously tested for the proof load (see Paragraph (*a*)). The bolt head shall be so placed that no corner of the hexagon or square takes a bearing load, that is, a flat of the head shall be aligned with the direction of uniform thickness of the wedge (Fig. F 2). The wedge shall have an included angle of 10 deg between its faces and shall have a thickness of one-half of the nominal bolt diameter at the short side of the hole. The hole in the wedge shall have the following clearance over the nominal size of the bolt, and its edges, top and bottom, shall be rounded to the following radius:

Nominal Bolt Size, in.	Clearance in Hole, in.	Radius on Corners of Hole, in.
¼ to ½	0.030	1/32
9/16 to ¾	0.050	1/16
⅞ to 1	0.063	1/16
1⅛ to 1¼	0.063	⅛
1⅜ to 1½	0.094	⅛

(*d*) *Tension Testing of Bolts Machined to Round Test Specimens:*

(*1*) Bolts under 1½ in. in diameter which require machined tests shall use a standard ½-in. round 2-in. gage length test specimen, turned concentric with the axis of the bolt, leaving the head and threaded section intact as in Fig. F 3. Bolts of small cross-section which will not permit taking this standard test specimen shall have a turned section as large as feasible and concentric with the axis of the bolt. The gage length for measuring the elongation shall be four times the diameter of the specimen. Figure F 4 illustrates examples of these small size specimens.

(*2*) For bolts 1½ in. and over in diameter, a standard ½-in. round 2-in. gage length test specimen shall be turned from the bolt, having its axis midway between the center and outside surface of the body of the bolt as shown in Fig. F 5.

(*3*) Machined specimens are to be tested in tension to determine the properties prescribed by the product specifications. The methods of testing and determination of properties shall be in accordance with sections 12 to 17, inclusive, of these methods, A 370.

(*e*) *Bolts Not Suitable for Tension Testing.*—In those cases where bolts are too short, having insufficient threads for tension testing, or have drilled or undersize heads that are weaker than the threaded section, the bolts shall be subjected to a hardness test to determine accordance with the hardness value prescribed in the individual product specification. If, however, no hardness is so specified, the applicable hardness shall be obtained by conversion from the specified tensile strength.

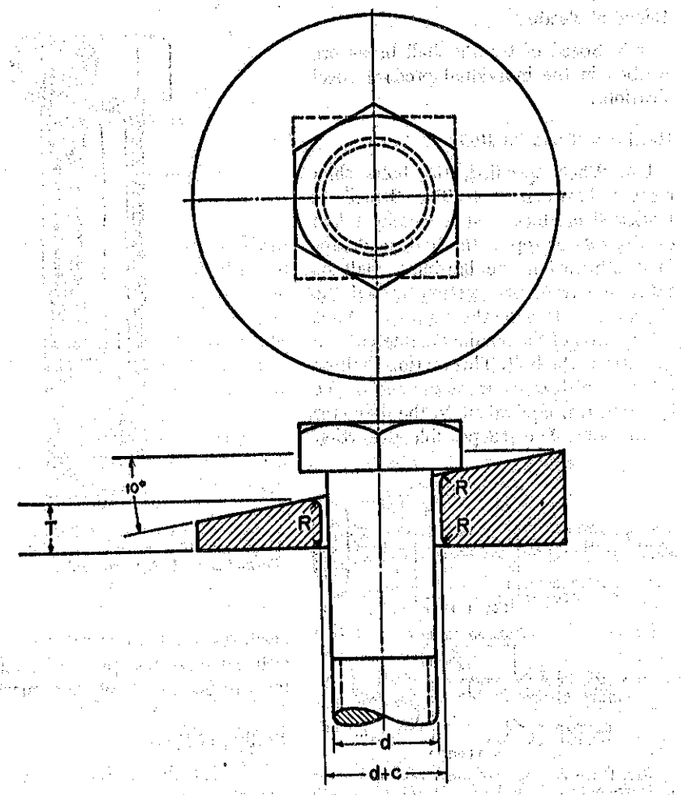

c = Clearance of wedge hole.
d = Diameter of bolt.
R = Radius.
T = Thickness of wedge at short side of hole equal to one-half diameter of bolt.

FIG. F 2.—Wedge Test Details.

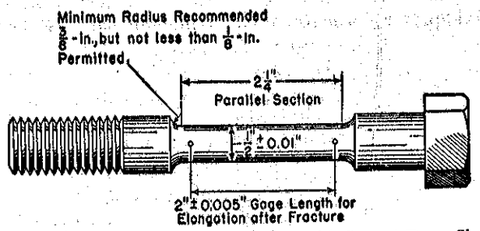

FIG. F 3.—Tension Test Specimen for Bolt with Turned-Down Shank.

Speed of Testing

F 3. Speed of testing shall be as prescribed in the individual product specifications.

Hardness Tests for Bolts

F 4. When specified, the bolts shall meet a hardness test. The Brinell or Rockwell hardness test is usually taken on the side or top of the bolt head. For final arbitration the hardness shall be taken on a transverse section through the threaded section of the bolt at a point one-quarter of the nominal diameter from the axis of the bolt. This section shall be taken at a distance from the end of the bolt which is equivalent to the diameter of the bolt. Due to possible distortion

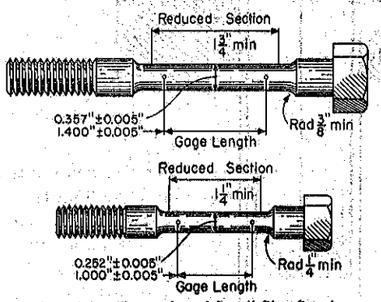

FIG. F 4.—Examples of Small Size Specimens Proportional to Standard 2-in. Gage Length Specimen.

from the Brinell load, care shall be taken to see that this test meets all the provisions of Section 20 of the general section of these methods. Where the Brinell hardness test is impractical, the Rockwell

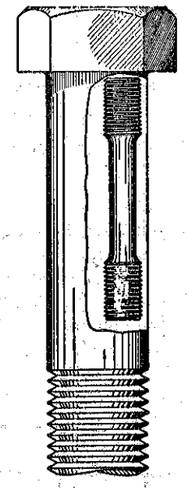

FIG. F 5.—Location of Standard Round 2-in. Gage Length Tension Test Specimen When Turned from Large Size Bolt.

hardness test shall be substituted. Rockwell hardness test procedures shall conform to Section 22 of these methods.

Testing of Nuts

F 5. (*a*) *Proof Load.*—As specified, nuts shall be subject to a proof load test without failure, within the limits of the practical capacity of the testing machine. Jam, slotted, castle nuts, nuts under standard thickness or plated nuts to be tapped oversize, shall not be subject to the proof load test, but shall meet a minimum hardness test when so specified. Nuts whose specified proof load is beyond the capacity of the available testing equipment shall meet a specified minimum hardness test. A sample nut shall be assembled on a hardened threaded mandrel or on a bolt conforming to the particular specification. A load axial with the mandrel or bolt and equal to the specified proof load of the nut shall be applied. The nut shall resist this load without stripping or rupture. If the threads of the mandrel are damaged during the test the individual test shall be discarded. The mandrel shall be threaded to American Standard class 3 tolerance, except that the major diameter shall be the minimum major diameter with a tolerance of +0.002 in.

(*b*) *Hardness Test.*—Rockwell hardness of nuts shall be determined on the top or bottom face of the nut. Brinell hardness shall be determined on the side of the nuts. Either method may be used at the option of the manufacturer, taking into account the size and grade of the nuts under test. When the standard Brinell hardness test results in deforming the nut it will be necessary to use a minor load or substitute a Rockwell hardness test.

Bars Heat Treated or Cold Drawn for Use in the Manufacture of Studs, Nuts or Other Bolting Material

F 6. When the bars as received by the manufacturer have been processed and proved to meet certain specified properties, it is not necessary to test the finished product when these properties have not been changed by the process of manufacture employed for the finished product.

SUPPLEMENT IV

ROUND WIRE PRODUCTS

Scope

W 1. This supplement covers the apparatus, specimens and methods of testing peculiar to steel wire products which are not covered in the general section of Methods A 370.

Apparatus

W 2. (*a*) *Gripping Devices.*—Grips of either the wedge or snubbing types as shown in Figs. 1 and 2 of the Method of Tension Testing of Steel Spring Wire (ASTM Designation: A 318), shall be used (Note 1). When using grips of either type, care shall be taken that the axis of the test specimen is located approximately in the center line of the head of the testing machine (Note 2). When using wedge grips the liners used behind the grips shall be of the proper thickness.

NOTE 1.—Testing machines usually are equipped with wedge grips. These wedge grips, irrespective of the type of testing machine, may be referred to as the "usual type" of wedge grips. The usual type of wedge grips generally furnish a satisfactory means of gripping wire. For tests of specimens of wire which are liable to be cut at the edges by the "usual type" of wedge grips, the snubbing type gripping device has proved satisfactory.

NOTE 2.—Any defect in a testing machine which may cause nonaxial application of load should be corrected.

(*b*) *Pointed Micrometer.*—A micrometer with a pointed spindle and anvil suitable for reading the dimensions of the wire specimen at the fractured ends to the nearest 0.001 in. after breaking the specimen in the testing machine shall be used.

Test Specimens

W 3. (*a*) Test specimens having the full cross-sectional area of the wire they represent shall be used. The standard gage length of the specimens shall be 10 in. However, if the determination of elongation values is not required, any convenient gage length is permissible. The total length of the specimens shall be at least equal to the gage length (10 in.) plus twice the length of wire required for the full use of the grip employed. For example, depending upon the type of testing machine and grips used, the minimum total length of specimen may vary from 14 to 24 in. for a 10-in. gage length specimen.

(*b*) Any specimen breaking in the grips shall be discarded and a new specimen tested.

Elongation

W 4. (*a*) In determining permanent elongation, the ends of the fractured specimen shall be carefully fitted together and the distance between the gage marks measured to the nearest 0.01 in. with dividers and scale or other suitable device. The elongation is the increase in length of the gage length, expressed as a percentage of the original gage length. In reporting elongation values, both the percentage increase and the original gage length shall be given.

(*b*) In determining total elongation (elastic plus plastic extension) autographic or extensometer methods may be employed.

(*c*) If fracture takes place outside of the middle third of the gage length, the elongation value obtained may not be representative of the material.

Reduction of Area

W 5. (*a*) The ends of the fractured specimen shall be carefully fitted together and the dimensions of the smallest cross-section measured to the nearest 0.001 in. with a pointed micrometer. The difference between the area thus found and the area of the original cross-section, expressed as a percentage of the original area, is the reduction of area.

(*b*) The reduction of area test is not recommended in wire diameters less than 0.050 in. due to the difficulties of measuring the reduced cross-sections.

Rockwell Hardness Test

W 6. With the exception of heat treated wire of diameter 0.100 in. and larger, the Rockwell Hardness test is not recommended for round wire. On such heat treated wire the specimen shall be flattened on two parallel sides by grinding. For round wire the tensile strength test is greatly to be preferred to the Rockwell Hardness test.

Wrapping Test

W 7. (*a*) This test, also referred to as a coiling test or as a wrap-around bend test, is sometimes used as a means for testing the ductility of certain kinds of wire. The wrapping may be done by any hand or power device that will coil the wire closely about a mandrel of the specified diameter for a required number of turns without damage to the wire surface. The sample shall be considered to have failed if any cracks occur in the wire after the first complete turn. The test shall be repeated if a crack occurs in the first turn since the wire may have been bent locally to a radius less than that specified.

(*b*) When the wrapping test is used to determine the adherence of coating for coated wires, the mandrel diameter is commonly larger than that used in the test when used as a measure of ductility.

SPECIFICATION FOR ULTRASONIC TESTING AND INSPECTION OF STEEL PLATES OF FIREBOX AND HIGHER QUALITY

SA-435

(IDENTICAL WITH ASTM SPECIFICATION A 435–59T)

Scope

1. This specification covers the standards and procedure for the ultrasonic inspection of rolled carbon and alloy steel plates, $\frac{3}{4}$ in. in thickness and over, of fully killed firebox or higher quality. It was developed to assure delivery of steel free from gross internal discontinuities such as pipe, ruptures, or laminations and is to be used whenever the inquiry, contract, order, or specification states that the plates are to be subjected to ultrasonic inspection.

Mill Inspection

2. (*a*) The inspection shall be carried out in an area reasonably free from operations that interfere with proper functioning of the equipment.

(*b*) The plate surface must be smooth enough so that a back reflection of at least 50 per cent of full scale deflection can be maintained during scanning without causing the initial pulse to obscure the center of the plate on the oscilloscope screen.

(*c*) Unless otherwise specified, ultrasonic inspection shall be made on either the top or bottom surface after final treatment and prior to shipment.

(*d*) Surface cleaning must be sufficient to comply with the requirements of Paragraph (*b*). This may involve flame descaling, grit blasting, or other suitable methods of scale removal, at the manufacturer's option. Local rough surfaces shall be conditioned by grinding to insure the proper contact of the transducer to the plate surface.

(*e*) The surface of plates inspected by this method may be expected to contain a residue of oil or rust or both. Any specified identification which is removed when grinding to achieve proper surface smoothness shall be restored.

Apparatus

3. The manufacturer shall furnish suitable ultrasonic equipment and qualified personnel necessary for performing the test. The equipment shall be of the pulse-echo direct-contact longitudinal beam type using a $1\frac{1}{8}$-in. diameter or 1-in. square transducer.

Procedure

4. (*a*) The nominal test frequency shall be $2\frac{1}{4}$ Mc unless either or both the grain size and microstructure of the material prevents penetration by scattering the ultrasonic beam, in which case the frequency may be decreased to 1 Mc. A higher frequency may be used when the plate thickness cannot be adequately inspected at a frequency of $2\frac{1}{4}$ Mc. For example, if the center of the plate is obscured by the initial pulse on the sweep line, then a higher frequency may be used.

(*b*) The ultrasonic equipment shall be adjusted at a location free of indications so that the first back reflection will not be less than 50 per cent of full scale deflection during scanning.

(*c*) Unless otherwise specified, scanning shall be along perpendicular grid lines on nominal 12-in. centers (path approximately 3 in. wide), using a suitable couplant such as water, soluble oil, or glycerin.

(*d*) Grid lines shall be measured from the middle of the plate with an additional 3 in. wide path along all edges of the plate on the searching surface.

(*e*) When indications of gross discontinuities are detected along a given grid line, the 12-in. squares surrounding these indications shall be scanned over 100 per cent of their areas. The complete scanning of all adjacent 12-in. squares shall continue until the boundary of the area containing the discontinuities is established.

(*f*) With the transducer, directly over the discontinuity, both the maximum height of indication and the height of back reflection, as established in Paragraph (*b*), shall be measured.

Quality

5. (*a*) Ultrasonic testing may be used for inspection purposes where rejection may be based on number, magnitude, type, and location of the ultrasonic indications.

(*b*) Any complete loss of back reflection encountered during scanning will be further explored to determine if the indication is of sufficient size to warrant rejection.

(*c*) A rejectable defect is considered to be one in which one or more ultrasonic indications cause complete loss of back reflection which is maintained during movement of the transducer 2 in. in any direction.

(*d*) The manufacturer reserves the right to discuss rejectable ultrasonically tested plates with the purchaser with the object of possible repair of the ultrasonically indicated defect before rejection of the plate.

(*e*) More restrictive standards of acceptance will be subject to agreement between purchaser and the supplier.

SPECIFICATION FOR GENERAL REQUIREMENTS FOR CARBON, FERRITIC ALLOY, AND AUSTENITIC ALLOY STEEL TUBES

SA-450

(IDENTICAL WITH ASTM SPECIFICATION A 450-61T EXCEPT FOR EDITORIAL CORRECTIONS)

Scope

1. (*a*) This specification covers a group of common requirements which, when specified in the purchase order or in an individual specification, shall apply to hot-finished and cold-drawn, welded and seamless carbon steel, ferritic and austenitic alloy steel, and iron tubes under each of the following specifications issued by the American Society for Testing Materials (or any other ASTM specification which invokes this specification or portion thereof):

Title of Specification	ASTM Designation[a]
Seamless Carbon Steel and Open-Hearth Iron Boiler Tubes	A 83
Seamless Low-Carbon and Carbon-Molybdenum Steel Still Tubes for Refinery Service	A 161
Electric-Resistance-Welded Carbon Steel and Open-Hearth Iron Boiler Tubes	A 178
Seamless Cold-Drawn Low-Carbon Steel Heat-Exchanger and Condenser Tubes	A 179
Seamless Carbon Steel Boiler Tubes for High-Pressure Vessels	A 192
Seamless Cold-Drawn Intermediate Alloy Steel Heat-Exchanger and Condenser Tubes	A 199
Seamless Intermediate Alloy Steel Still Tubes for Refinery Service	A 200
Seamless Carbon-Molybdenum Alloy Steel Boiler and Superheater Tubes	A 209
Seamless Medium-Carbon Steel Boiler and Superheater Tubes	A 210
Seamless Ferritic and Austenitic Alloy Steel Boiler, Superheater and Heat-Exchanger Tubes	A 213
Electric-Resistance-Welded Carbon Steel Heat Exchanger and Condenser Tubes	A 214
Electric-Resistance-Welded Carbon Steel Boiler and Superheater Tubes for High-Pressure Service	A 226
Welded Austenitic Steel Boiler, Superheater, Heat-Exchanger, and Condenser Tubes	A 249
Electric-Resistance-Welded Carbon-Molybdenum Alloy Steel Boiler and Superheater Tubes	A 250
Copper Brazed Steel Tubing	A 254
Seamless and Welded Carbon and Alloy Steel Tubes for Low-Temperature Service	A 334
Seamless and Electric-Welded Low-Alloy Steel Tubes for Economizers	A 423

[a] These designations refer to the latest issue of the respective specifications which appear in this publication.

(*b*) In case of conflict, the requirements in the purchase order, in the individual specification, and in this general specification shall prevail in the sequence named.

Samples for Check Analysis

2. Samples for chemical analysis, except for spectrographic analysis, shall be taken in accordance with the Method of Sampling Steel, Cast Iron, Open-Hearth Iron, and Wrought Iron for Determination of Chemical Composition (ASTM Designation: E 59).

Tensile Properties

3. (*a*) The material shall conform to the requirements as to tensile properties prescribed in the individual specification.

(*b*) The yield point shall be determined by the drop of the beam, by the halt in the gage of the testing machine, by the use of dividers, or by other approved methods. When a definite yield point is not exhibited, the yield strength corresponding to a permanent offset of 0.2 per cent of the gage length of the specimen, or to a total extension of 0.5 per cent of the gage length under load, shall be determined.

(*c*) If the percentage of elongation of any test specimen is less than that specified and any part of the fracture is more than $\frac{3}{4}$ in. from the center of the gage length, as indicated by scribe marks on the specimen before testing, a retest shall be allowed.

Flattening Test

4. (*a*) A section of tube not less than $2\frac{1}{2}$ in. in length for seamless and not less than 4 in. in length for welded shall be flattened cold between parallel plates in two steps. For welded tubes, the weld shall be placed 90 deg from the direction of the applied force. During the first step, which is a test for ductility, no cracks or breaks on the inside, outside, or end surfaces shall occur in seamless tubes, or on the inside or outside surfaces of welded tubes, until the distance between the plates is less than the value of "H" calculated by the following formula:

$$H = \frac{(1 + e)t}{e + t/D}$$

where:

H = distance between flattening plates, in inches,

t = specified wall thickness of the tube, in inches,

D = specified outside diameter of the tube, in inches, and

e = deformation per unit length (constant for a given grade of steel: 0.07 for medium-carbon steel (0.19 min carbon), 0.08 for ferritic alloy steel, 0.09 for austenitic steel, and 0.09 for low-carbon steel (0.18 max carbon)).

During the second step, which is a test for soundness, the flattening shall be continued until the specimen breaks or the opposite walls of the tube meet. Evi-

dence of laminated or unsound material, or of incomplete weld that is revealed during the entire flattening test shall be cause for rejection.

(*b*) Surface imperfections in the test specimens before flattening, but revealed during the first step of the flattening test, shall be judged in accordance with the finish requirements.

(*c*) Superficial ruptures resulting from surface imperfections shall not be cause for rejection.

Reverse Flattening Test

5. A section 4 in. in length of finished welded tubing shall be split longitudinally 90 deg on each side of the weld and the sample opened and flattened with the weld at the point of maximum bend. There shall be no evidence of cracks or lack of penetration or overlaps resulting from flash removal in the weld.

Flaring Test

6. A section of tube approximately 4 in. in length shall stand being flared with a tool having a 60-deg included angle until the tube at the mouth of the flare has been expanded to the percentages specified in Table I without cracking or showing flaws.

TABLE I.—FLARING TEST REQUIREMENTS.

Ratio of Inside Diameter to Outside Diameter[a]	Minimum Expansion of Inside Diameter, per cent	
	Carbon, Carbon-Molybdenum, and Austenitic Steels	Other Ferritic Alloy Steels
0.9	21	15
0.8	22	17
0.7	25	19
0.6	30	23
0.5	39	28
0.4	51	38
0.3	68	50

[a] In determining the ratio of inside diameter to specified outside diameter, the inside diameter shall be defined as the actual mean inside diameter of the material tested.

TABLE II.—FLANGE REQUIREMENTS

Outside Diameter of Tube, in.	Width of Flange
Over ¾ to 2½, incl.	15 per cent of OD
Over 2½ to 3¾, incl.	12½ per cent of OD
Over 3¾	10 per cent of OD

Flange Test

7. (*a*) A section of tube not less than 4 in. in length shall be capable of having a flange turned over at a right angle to the body of the tube without cracking or showing flaws. This flange, as measured from the outside of the tube, shall be not less than ⅛ nor more than ½ in. for carbon and alloy steels and ¾ in. for the austenitic grades. Within these limits, the width of the flange for carbon and alloy steels shall be not less than the percentages specified in Table II. For the austenitic grades, the width of the flange for all sizes listed in Table II shall be not less than 15 per cent.

(*b*) For tubes ¾ in. and less in outside diameter, the width of the flange shall be not less than 15 per cent of the outside diameter of the tube.

Hardness Test

8. (*a*) For tubes 0.200 in. and over in wall thickness, the Brinell hardness test shall be used. Tubes having wall thicknesses from 0.200 to 0.375 in., exclusive, a 10-mm ball with 1500-kg load, or a 5-mm ball with 750-kg load may be used, at the option of the manufacturer.

(*b*) For tubes less than 0.200 in. to and including 0.065 in. in wall thickness, the Rockwell hardness test shall be used.

(*c*) For tubes less than 0.065 in. in wall thickness, the hardness test shall not be required.

(*d*) The Brinell hardness test may be made on the outside of the tube near the end or on the outside of a specimen cut from the tube, at the option of the manufacturer.

(*e*) The Rockwell hardness test shall be made on the inside of a specimen cut from the tube. However, if the inside diameter is less than ¼ in., it may be made on the outside of the tube.

(*f*) For tubes furnished with upset, swaged, or otherwise formed ends, the hardness test shall be made as prescribed in Paragraphs (*a*) and (*b*) on the outside of the tube near the end after the forming operation and heat treatment.

(*g*) For welded or brazed tubes, the hardness test shall be made away from the joints.

Hydrostatic Test

9. (*a*) Prior to upsetting, swaging, expanding, bending, or other forming operations, each tube shall be tested at the mill to the hydrostatic pressures prescribed in Table III, provided that the fiber stress does not exceed 16,000 psi when calculated as follows:

$$P = \frac{2St}{D},$$

or

$$S = \frac{PD}{2t}$$

where:

P = hydrostatic test pressure, in pounds per square inch,
S = allowable fiber stress of 16,000 psi,
t = specified wall thickness, in inches, and
D = specified outside diameter, in inches.

(*b*) The test pressure shall be held for a minimum of 5 sec.

(*c*) Welded tubes with wall thicknesses greater than 0.154 in. shall be struck near both ends, while under the test pressure, with a 2-lb steel hammer or its equivalent.

TABLE III.—HYDROSTATIC TEST PRESSURES

Outside Diameter of Tube, in.	Hydrostatic Test Pressure, psi
Under 1	1000
1 to 1½, excl.	1500
1½ to 2, excl.	2000
2 to 3, excl.	2500
3 to 5, excl.	3500
5 and over	4500

(*d*) When requested by the purchaser and so stated in the order, tubes shall be tested to one and one half times the specified working pressure (when one and one half times the specified working pressure exceeds the test pressure prescribed in Table III), provided the fiber stress corresponding to those test pressures does not exceed 16,000 psi as calculated in accordance with Paragraph (*a*).

(*e*) When requested by the purchaser and so stated in the order, or at the option of the manufacturer, tubes shall be tested at pressures, calculated in accordance with Paragraph (*a*), corresponding to a fiber stress of more than 16,000 psi, but not more than 24,000 psi.

(*f*) If any tube shows leaks during the hydrostatic test, it shall be rejected.

TABLE IV.—REQUIREMENTS FOR NONDESTRUCTIVE ELECTRIC TEST.

Wall Thickness[a]		Minor Dimension (Least Dimension) of the Defect, Length or Depth	Defective Area (Length × Radial Depth), Sq In.
In.	Birmingham wire gage		
0.035	20	0.006 in.	0.0025
0.049	18	0.006 in.	0.0030
0.065	16	12½ per cent of wall	0.0030
0.083	14	12½ per cent of wall	0.0040
0.095	13	12½ per cent of wall	0.0040
0.109 and over	12 and heavier	12½ per cent of wall	0.0050

[a] For intermediate wall thicknesses, the next lower wall thickness shown in the table shall apply.

Nondestructive Electric Test for Welded Tubing

10. Each tube shall be tested at the mill by passing it through a nondestructive tester capable of detecting any defect that completely penetrates the tube wall or any defect equal to or greater those specified in Table IV. Such tests shall be made on the welded seam and the adjacent metal affected thereby, or on the entire cross-section of the tube, at the option of the manufacturer.

Permissible Variations in Wall Thickness

11. (*a*) Variations from the specified minimum wall thickness shall not exceed the amounts prescribed in Table V.

(*b*) For tubes 2 in. and over in outside diameter and 0.220 in. and over in thickness, the variation in wall thickness in any one cross-section of any one tube shall not exceed the following percentage of the actual average wall at that section. The actual average wall is defined as the average of the thickest and thinnest wall in that section.

Seamless tubes	±10 per cent
Welded tubes	± 5 per cent

(*c*) When cold-drawn tubes as ordered require wall thicknesses ¾ in. or over, or an inside diameter 60 per cent or less of the outside diameter, the permissible variations in wall thickness for hot-finished tubes shall apply.

TABLE V.—PERMISSIBLE VARIATIONS IN WALL THICKNESS.[a]

Outside Diameter, in.	Wall Thickness, per cent							
	0.095 in. and Under		Over 0.095 to 0.150 in., Incl		Over 0.150 to 0.180 in., Incl		Over 0.180, in.	
	Over	Under	Over	Under	Over	Under	Over	Under
Seamless, Hot-Finished Tubes								
4 and under	40	0	35	0	33	0	28	0
Over 4	...	...	35	0	33	0	28	0
Seamless, Cold-Drawn Tubes								
	Over		Under					
1½ and Under	20		0					
Over 1½	22		0					
Welded Tubes								
All sizes	18		0					

[a] These permissible variations in wall thickness apply only to tubes, except internal-upset tubes, as rolled or drawn, and before swaging, expanding, bending, polishing, or other fabricating operations.

Permissible Variations in Outside Diameter

12. (*a*) Variations from the specified outside diameter shall not exceed the amounts prescribed in Table VI.

(*b*) Cold-drawn tubes having a specified wall thickness which is 3 per cent, or less than 3 per cent, of the outside diameter cannot be straightened properly without a certain amount of ovality resulting in the diameter; consequently, such tubes, while having an average outside diameter within the permissible variations prescribed in Table VI, will require an additional ovality permissible variation of ±0.5 per cent of the outside diameter.

(*c*) For tubes made of austenitic steel, a permissible variation in outside diameter of ±0.010 in. for all sizes under 2 in. in diameter is necessary since, in the final heat treatment of the tubes, they are likely to become out-of-round.

TABLE VI.—PERMISSIBLE VARIATIONS IN OUTSIDE DIAMETER.[a]

Outside Diameter, in.	Outside Diameter (Including Out-of-Roundness), in.	
	Over	Under
Seamless, Hot-Finished Tubes		
4 and Under	1/64	1/32
Over 4 to 7½, incl.	1/64	3/64
Over 7½ to 9, incl.	1/64	1/16
Seamless, Cold-Drawn and Welded Tubes		
Under 1	0.004	0.004
1 to 1½, incl.	0.006	0.006
Over 1½ to 2, excl.	0.008	0.008
2 to 2½, excl.	0.010	0.010
2½ to 3, excl.	0.012	0.012
3 to 4, incl.	0.015	0.015
Over 4 to 7½, incl.	0.015	0.025
Over 7½ to 9, incl.	0.015	0.045

[a] These permissible variations in outside diameter apply only to tubes, except internal-upset tubes, as rolled or drawn before swaging, expanding, bending, polishing, or other fabricating operations.

Permissible Variations in Length

13. (*a*) Variations from the specified length shall not exceed the amounts prescribed in Table VII.

TABLE VII.—PERMISSIBLE VARIATIONS IN LENGTH.[a]

Method of Manufacture	Outside Diameter, in.	Cut Length, in.	
		Over	Under
Seamless, hot-finished	All sizes	3/16	0
Seamless, cold-drawn	Under 2	1/8	0
	2 and over	3/16	0
Welded	Under 2	1/8	0
	2 and over	3/16	0

[a] These permissible variations in length apply to tubes before bending. They apply to cut lengths up to and including 24 ft. For lengths over 24 ft., an additional over-tolerance of ⅛ in. for each 10 ft or fraction thereof shall be permissible, up to a maximum of ½ in.

Permissible Variations in Straightness

14. Each tube shall be reasonably straight.

Permissible Variations in Height of Flash on Electric-Resistance-Welded Tubes

15. (*a*) For tubes over 2 in. in outside

diameter, and over 0.135 in. in wall thickness, the flash on the inside of the tubes shall be cut to a maximum height of 0.010 in. at any point on the tube.

(*b*) For tubes 2 in. and under in outside diameter and 0.135 in. and under in wall thickness, the flash on the inside of the tube shall be cut to a maximum height of 0.006 in. at any point on the tube.

Standard Weights

16. (*a*) The calculated weight per foot, based upon a specified minimum wall thickness, shall be determined by the following equation:

$$W = 10.68\,(D - t)\,t$$

where:

W = weight in pounds per foot,
D = specified outside diameter in inches, and
t = specified minimum wall thickness in inches.

TABLE VIII.—PERMISSIBLE VARIATIONS IN WEIGHT PER FOOT.[a]

Method of Manufacture	Permissible Variation in Weight per Foot, per cent	
	Over	Under
Seamless, hot-finished	16	0
Seamless, cold-drawn:		
1½ in. and under OD	12	0
Over 1½ in. OD	13	0
Welded	10	0

[a] These permissible variations in weight apply to lots of 50 tubes or more in sizes 4 in. and under in outside diameter, and to lots of 20 tubes or more in sizes over 4 in. in outside diameter.

NOTE.—The calculated weights per foot may be found in the published "Weight Tables for Round Seamless Steel Tubing."

(*b*) The permissible variations from the calculated weight per foot shall be as prescribed in Table VIII.

Method of Mechanical Testing

17. (*a*) The specimens and mechanical tests required shall be made in accordance with Supplement II of the Methods and Definitions for Mechanical Testing of Steel Products (ASTM Designation: A 370).

(*b*) Specimens shall be tested at room temperature.

Test Specimens

18. (*a*) Test specimens shall be taken from the ends of finished tubes prior to upsetting, swaging, expanding, or other forming operations, or being cut to length. They shall be smooth on the ends and free from burrs and flaws.

(*b*) If any test specimen shows flaws or defective machining, it may be discarded and another specimen substituted.

Retests

19. If the results of the mechanical tests of any group or lot do not conform to the requirements specified in the individual specification, retests may be made on additional tubes of double the original number from the same group or lot, each of which shall conform to the requirements specified.

Retreatment

20. If the individual tubes or the tubes selected to represent any group or lot fail to conform to the test requirements, the individual tubes or the group or lot represented may be retreated and resubmitted for test. Not more than two reheat treatments shall be permitted.

Marking

21. (*a*) The name or brand of the manufacturer, the grade (such as T5, TP304, etc.) of the material from which the tube is made, ASTM and the specification number shall be legibly stenciled on each tube 1¼ in. and over in outside diameter, provided the length is not under 3 ft.

(*b*) For tubes less than 1¼ in. in diameter and tubes under 3 ft in length, the information specified in Paragraph (*a*) shall be marked on a tag securely attached to the bundle or box in which the tubes are shipped.

(*c*) For austenitic tubes, the marking paint or ink shall not contain any harmful metal, or metal salts, such as zinc, lead, or copper, which cause corrosive attack on heating.

(*d*) When it is specified that certain requirements of a specification adopted by the ASME Boiler and Pressure Vessel Committee are to be completed by the purchaser upon receipt of the material, the manufacturer shall indicate that all requirements of the specification have not been completed by a letter such as X, Y, or Z, immediately following the specification number. This letter may be removed after completion of all requirements in accordance with the specification. An explanation of specification requirements to be completed is provided in Section 22(*b*).

Inspection

22. (*a*) The inspector representing the purchaser shall have free entry at all times while work on the contract of the purchaser is being performed, to all parts of the manufacturer's works that concern the manufacture of the material ordered. The manufacturer shall afford the inspector, without charge, all reasonable facilities to satisfy him that the material is being furnished in accordance with this specification. All required tests and inspection shall be made at the place of manufacture prior to shipment, unless otherwise specified, and shall be conducted so as not to interfere unnecessarily with the operation of the works.

(*b*) *Certification.*—When inspection at the place of manufacture has been waived by the purchaser, the manufacturer shall furnish, on request, a statement that the material has been tested and has met all the requirements of the specification. The certificate or report furnished by the manufacturer shall include a statement of explanation for the letter added to the specification number (see Section 21(*d*)), when all the requirements of the specification have not been completed. The purchaser must certify that all requirements of the specification have been completed before removal of the letter (that is, X, Y, or Z).

Rejection

23. (*a*) Any rejection based on tests made in accordance with Section 2 on check analysis shall be reported to the manufacturer within five working days from the receipt of samples by the purchaser.

(*b*) Material that fails in any of the forming operations or in the process of installation or if found to be defective shall be set aside and the manufacturer shall be notified.

Rehearing

24. Samples tested in accordance with the section on check analysis that represent rejected material shall be preserved for two weeks from the date of test report. In case of dissatisfaction with the results of the tests, the manufacturer may make claim for a rehearing within that time.

SPECIFICATION FOR GENERAL REQUIREMENTS FOR WROUGHT COPPER AND COPPER-ALLOY ROD, BAR AND SHAPES

SB-249

(IDENTICAL WITH ASTM SPECIFICATION B 249-60)

Scope

1. This specification covers a group of general requirements common to several wrought product specifications. Unless otherwise specified in the purchase order or in an individual specification, these general requirements shall apply to copper and copper-alloy rod, bar, and shapes supplied under each of the following specifications issued by the American Society for Testing Materials:

Title of Product Specification	ASTM Designation[a]
Free-Cutting Brass Rod, Bar, and Shapes	B 16
Naval Brass Rod, Bar, and Shapes	B 21
Copper-Silicon Alloy Rod, Bar, and Shapes	B 98
Copper Rod, Bar, and Shapes	B 133
Manganese Bronze Rod, Bar, and Shapes	B 138
Phosphor Bronze Rod, Bar, and Shapes	B 139
Leaded Red Brass (Hardware Bronze) Rod, Bar, and Shapes	B 140
Aluminum Bronze Rod, Bar, and Shapes	B 150
Copper-Nickel-Zinc Alloy (Nickel Silver) Rod and Bar	B 151
Copper-Beryllium Alloy Rod and Bar	B 196

[a] These designations refer to the latest issue of the respective specification.

NOTE 1.—Requirements for flat wire (defined as flat product up to and including 0.188 in. in thickness and up to 1½ in. in width, with all surfaces rolled or drawn, without having been slit, sheared or sawed) including square, furnished in coils or straight lengths, or on spools, reels or bucks are covered by the following wire specifications:

Title of Product Specification	ASTM Designation[a]
Copper-Nickel-Zinc Alloy (Nickel Silver) Wire	B 206
Rectangular Copper Wire for General Purposes	B 272

[a] These designations refer to the latest issue of the respective specification.

NOTE 2.—Requirements for rolled bar as defined in Section 2(*d*) of ASTM Specification B 248 are covered by the following specifications:

Title of Product Specification	ASTM Designation[a]
Brass Plate, Sheet, Strip, and Rolled Bar	B 36
Copper-Silicon Alloy Plate, Sheet, Strip, and Rolled Bar for General Purposes	B 97
Phosphor Bronze Plate, Sheet, Strip, and Rolled Bar	B 103
Leaded Brass Plate, Sheet, Strip, and Rolled Bar	B 121
Copper-Nickel-Zinc Alloy (Nickel Silver) and Copper-Nickel Alloy Plate, Sheet, Strip, and Rolled-Bar	B 122
Copper Sheet, Strip, Plate, and Rolled Bar	B 152
Aluminum Bronze Plate, Sheet, Strip, and Rolled Bar	B 169
Copper-Beryllium Alloy Plate, Sheet, Strip, and Rolled Bar	B 194

[a] These designations refer to the latest issue of the respective specifications.

Definitions

2. The following definitions shall apply:

(*a*) *Rod.*—A round, hexagonal, or octagonal solid section furnished in straight lengths.

(*b*) *Bar.*—A rectangular or square solid section up to and including 12 in. in width and over 0.188 in. in thickness, furnished in straight lengths or in rolls and with finished edges, either rolled, drawn or extruded.

(*c*) *Shape.*—A solid section other than retangular, square, round, hexagonal, or octagonal, furnished in straight lengths.

Manufacture

3. (*a*) The material shall be of such quality and purity that the finished product shall have the properties and characteristics prescribed in the applicable product specification listed in Section 1.

(*b*) For ASTM Designations B 16, B 98, B 138, B 139, B 140, B 151 and B 196, the material shall be manufactured by hot working, cold working, or both, and finished by such cold working, annealing or heat treatment and straightening as may be necessary to meet the properties specified.

(*c*) For ASTM Designations B 21, B 133, and B 150, the material shall be manufactured by hot rolling or extrusion and finished by such cold working, annealing or straightening as may be necessary to meet the properties specified.

Sampling and Number of Tests

4. (*a*) *Sampling.*—The lot size, portion size and selection of pieces shall be as follows:

Lot Size.—5000 lb or fraction thereof except that for ASTM Designation B 133 the lot size shall be 10,000 lb or fraction thereof.

Portion Size.—Pieces from four individual lengths of finished product. If the lot consists of less than four lengths, a piece shall be taken from each individual length.

(*b*) *Chemical Analysis.*—Samples for chemical analysis shall be taken and prepared in accordance with the Method of Sampling Wrought Non-Ferrous Metals and Alloys for Determination of Chemical Composition (ASTM Designation: E 55). The minimum weight of the composite sample that is to be divided into three equal parts shall be as follows:

ASTM Designation	Weight of Sample, min, g
B 16, B 21, B 98, B 133, B 138, B 140, B 151, B 196	150
B 139, B 150	225

(*c*) *Physical Tests.*—For the physical tests, unless otherwise provided in the product specification, a sample shall be taken from each of two of the four pieces selected in accordance with Section 4(*a*). The required physical tests shall be made on each of the two samples so selected. In the case of copper-beryllium alloy (ASTM Designation: B 196), four samples shall be selected, two of which shall be tested without further treatment and two of which shall be tested after precipitation hardening. In the case of the Rockwell tests, the number of hardness readings shall be not less than three on each of the two samples.

Methods of Test

5. The properties enumerated in the specifications listed in Section 1 shall, in case of disagreement, be determined in accordance with the following applicable methods of the American Society for Testing Materials:

Test	ASTM Designation[a]
Chemical Analysis	E 36, E 53, E 54 E 62, E 75
Tension	E 8[b]
Grain Size	E 2, E 3, E 79
Mercurous Nitrate	B 154
Rockwell Hardness	E 18
Electrical Resistivity	B 193

[a] These designations refer to the following methods of testing:
E 36, Methods for Chemical Analysis of Brasses,
E 53, Method for Chemical Analysis of Copper (Electrolytic Determination of Copper),
E 54, Methods for Chemical Analysis of Special Brasses and Bronzes,
E 62, Photometric Methods for Chemical Analysis of Copper and Copper-Base Alloys,
E 75, Methods for Chemical Analysis of Copper-Nickel and Copper-Nickel-Zinc Alloys,
E 8, Methods of Tension Testing of Metallic Materials,
E 2, Methods of Preparation of Micrographs of Metals and Alloys,
E 3, Methods of Preparation of Metallographic Specimens,
E 79, Methods for Estimating the Average Grain Size of Wrought Copper and Copper-Base Alloys,
B 154, Method of Mercurous Nitrate Test for Copper and Copper Alloys,
E 18, Methods of Test for Rockwell Hardness and Rockwell Superficial Hardness of Metallic Materials, and
B 193, Method of Test for Resistivity of Electrical Conductor Materials.

[b] The tension test specimen shall conform to the dimensions prescribed in Sections 8, 10, 11, or 12 of Methods E 8. Whenever tension test results are obtained from both full size and from machined test specimens and they differ, the results obtained from full size test specimens shall be used to determine conformance to the specification requirements.

Significance of Numerical Limits

6. For purposes of determining compliance with the specified limits for requirements of the properties listed in the following table, an observed value or a calculated value shall be rounded off as indicated in accordance with the rounding-off method of the Recommended Practices for Designating Significant Places in Specified Limiting Values (ASTM Designation: E 29).

Property	Rounded-Off Unit for Observed or Calculated Value
Chemical Composition, Hardness, Electrical Resistivity	nearest unit in the last right-hand place of figures of the specified limit.
Tensile Strength, Yield Strength	nearest 1000 psi
Elongation:	
Below 5 per cent	nearest multiple of 0.5 per cent
5 per cent and over	nearest 1 per cent
Grain Size:	
Up to 0.055 mm, incl.	nearest multiple of 0.005 mm
Over 0.055 to 0.160 mm, incl.	nearest 0.01 mm

Retests

7. (*a*) If any test specimen shows defective machining or develops flaws, it may be discarded and another specimen substituted.

(*b*) If the percentage of elongation of any tension test specimen is less than that specified and any part of the fracture is outside of the middle two-thirds of the gage length or in a punched or scribed mark within the reduced section, a retest shall be allowed.

(*c*) If a bend test specimen fails, due to conditions of bending more severe than required by the specification, a retest shall be permitted, either on a duplicate specimen or on a remaining portion of the failed specimen.

(*d*) If one of the two tests made to determine any of the physical properties fails to meet a specified limit, this test shall be repeated on each of the two remaining pieces selected in accordance with Section 4(*a*) and the results of both of these tests shall comply with the specified requirements.

(*e*) If the chemical analysis fails to conform to specified limits, analysis shall be made on a new composite sample prepared from four pieces selected in accordance with Section 4(*a*). The results of this retest shall comply with the specified requirements.

Dimensional Tolerances

8. (*a*) ***General.***—For the purpose of determining conformance with the dimensional requirements prescribed in this specification, any measured value outside the specified limiting values for any dimension may be cause for rejection.

NOTE 3.—Blank spaces in the tolerance tables indicate either that the material is not generally available or that no tolerances are established.

(*b*) ***Diameter or Distance Between Parallel Surfaces.***—The diameter of round sections or the distance between parallel surfaces in the case of other sections, except shapes, shall not vary from that specified by more than the amounts prescribed in Tables I through XI, incl, for the product specification indicated:

Table I.—Diameter tolerances for cold-drawn rod applicable to ASTM Designations B 16, B 21, B 98 (Alloy B), B 133 and B 140.

Table II.—Diameter tolerances for cold-drawn rod applicable to ASTM Designations B 98 (Alloys A and D), B 138, B 139, B 150, B 151, and B 196.

Table III.—Diameter tolerances for piston finish rod applicable to ASTM Designations B 21, B 138, B 139, and B 150.

Table IV.—Diameter tolerances for as-extruded rod and bar applicable to ASTM Designations B 138 (Alloy A) and B 150.

Table V.—Diameter tolerances for as-extruded rod and bar applicable to ASTM Designation B 138 (Alloy B).

Table VI.—Diameter tolerances for hot-rolled round rod applicable to ASTM Designations B 98, B 138, B 150, and B 196.

Table VII.—Thickness tolerances for retangular and square bar applicable to ASTM Designation B 133.

Table VIII.—Thickness tolerances for retangular and square bar applicable to ASTM Designations B 16, B 21, B 98 (Alloy B), and B 140.

Table IX.—Thickness tolerances for retangular and square bar applicable to ASTM Designations B 98 (Alloys A and D), B 138, B 139, B 150, B 151, and B 196.

Table X.—Width tolerances for rectangular bar applicable to ASTM Designations B 16, B 21, B 98 (Alloy B), B 133, and B 140.

Table XI.—Width tolerances for rectangular bar applicable to ASTM Designations B 98 (Alloys A and D), B 138, B 139, B 150, B 151, and B 196.

Table XVII.—Diameter tolerances for hot-forged rod and bar applicable to ASTM Designation B 138.

(*c*) ***Length***—Rod, bar, and shapes shall be furnished in stock lengths with ends, unless the order specifies stock lengths, specific lengths, or specific lengths with ends as prescribed in Tables XII, XIII, and XIV for the product specification indicated:

Table XII.—Length tolerances for full-length pieces applicable to ASTM Designations B 16, B 21, B 98, B 133, B 138, B 139, B 140, B 150, B 151, and B 196.

Table XIII.—Schedule of lengths (specific and stock) with ends applicable to ASTM Designations B 16, B 21, B 133, B 138 (Alloy A), and B 140.

Table XIV.—Schedule of lengths (specified and stock) with ends applicable to ASTM Designations B 98, B 138 (Alloy B), B 139, B 150, B 151, and B 196.

Straightness

9. (*a*) Unless otherwise specified, drawn rod, bar and shapes, other than shafting rod, piston finish rod, and soft temper copper bar (B 133), shall be furnished in straight lengths, of which the deviation from straightness shall not exceed the limitations prescribed in Table XV.

To determine compliance with this tolerance, the lengths shall, in case of disagreement, be checked by the following method: Place the lengths on a level table so that the arc or departure from straightness is horizontal. Measure the depth of arc to the nearest $\frac{1}{32}$ in., using a steel scale and a straight edge.

(*b*) Shafting rod, when so specified, shall comply with the tolerances of Table XVI. To determine compliance with this paragraph, shafting shall, in case of disagreement, be checked by the following method:

Place the shaft upon two freely rotating supports, one-fourth of the shaft length extending beyond each support. Measure the departure from straightness at each end and at the center by means of a dial gage mounted on a suitable movable block and set successively at the three points to be measured while rotating the shaft slowly and carefully to avoid vibration. The total range of the dial reading at a given point, divided by two, gives the departure from straightness at that point.

Edge Contours

10. (*a*) *Finish.*—All rectangular and square bar shall have finished edges.

(*b*) *Angles.*—All regular polygonal sections shall have substantially exact angles and, unless otherwise specified, sharp corners.

(*c*) *Rectangular and Square Bar.*—Unless otherwise specified, square corners shall be furnished on rectangular and square bar. When so ordered, the edge contours described in Paragraphs (*d*) through (*g*) inclusive shall be furnished.

(*d*) *Square Corners.*—Unless otherwise specified, bar shall be finished with commercially square corners with a maximum permissible radius of $\frac{1}{32}$ in. for bars over $\frac{3}{16}$ to 1 in., inclusive, in thickness, and $\frac{1}{16}$ in. for bars over 1 in. in thickness.

(*e*) *Rounded Corners.*—When specified, bar shall be finished with corners rounded as shown in Fig. 1 to a quarter circle with a radius of $\frac{1}{16}$ in. for bars over $\frac{3}{16}$ to 1 in., inclusive, in thickness, and $\frac{1}{8}$ in. for bars over 1 in. in thickness. The tolerance on the radius shall be plus and minus 25 per cent.

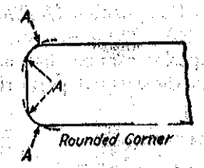

NOTE.—The arc shall not necessarily be tangent at points *A* but the product shall be commercially free from sharp, rough or projecting edges.

FIG. 1.—Rounded Corners.

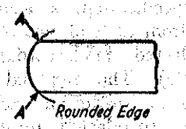

NOTE.—The arc shall be substantially symmetrical with the axis of the product. The corners, *A*, will usually be sharp but shall not have rough or projecting edges.

FIG. 2.—Rounded Edge.

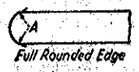

NOTE.—The arc shall not necessarily be tangent at points *A* but shall be substantially symmetrical with the axis of the product, and the product shall be commercially free from sharp, rough or projecting edges.

FIG. 3.—Full Rounded Edge.

(*f*) *Rounded Edge.*—When specified, bar shall be finished with edges rounded as shown in Fig. 2, the radius of curvature being $1\frac{1}{4}$ times the thickness of the bar for bars over $\frac{3}{16}$ in. in thickness. The tolerance on the radius shall be one fourth the thickness of the bar.

(*g*) *Full Rounded Edge.*—When specified, bar shall be finished with substantially uniform round edges, the radius of curvature being approximately one half the thickness of the product, as shown in Fig. 3, but in no case to exceed one half the thickness of the product by more than 25 per cent.

Workmanship

11. The material shall be free from defects of a nature that interfere with normal commercial applications. It shall be well cleaned and free from dirt.

Inspection

12. The manufacturer shall afford the inspector representing the purchaser, all reasonable facilities, without charge, to satisfy him that the material is being furnished in accordance with the specified requirements.

Packing and Marking

13. (*a*) The material shall be packed in such a manner as to prevent damage in ordinary handling and transportation.

(*b*) Each box, bundle, or crate shall be legibly marked with the purchase order number, specification and alloy designation, size, shape, temper, gross and net weights, and name of the manufacturer.

Rejection

14. Material that fails to conform to these specifications will be rejected, and the manufacturer shall be notified within 30 days after receipt of the material.

APPENDIX

STANDARD WEIGHTS

One cubic inch of the materials covered by the specifications listed in Section 1 is assumed to weigh the following:

ASTM Designation	Material	Alloy	Density, lb per cu in.
B 16	free-cutting brass	...	0.307
B 21	naval brass	A	0.304
		B	0.305
		C	0.305
B 98	copper-silicon alloy	A	0.308
		B	0.316
		D	0.308
B 133	copper	deoxidized and oxygen free	0.323
		other classifications	0.321
B 138	manganese bronze	A	0.302
		B	0.286
B 139	phosphor bronze	A	0.320
		B1	0.322
		B2	0.320
		C	0.318
		D	0.317
B 140	leaded red brass	A	0.317
		B	0.319
B 150	aluminum bronze	1	0.278
		2	0.274
B 151	copper-nickel-zinc alloy (nickel silver)	A	0.317
		B	0.314
		B1	0.315
		C	0.317
B 196	copper-beryllium alloy	...	0.297

TOLERANCE TABLES

The following tolerance tables are applicable to this specification:

TABLE I.—DIAMETER TOLERANCES FOR COLD-DRAWN ROD.

(Applicable to ASTM Designations B 16, B 21, B 98 (Alloy B), B 133, and B 140.)

Diameter or Distance Between Parallel Surfaces, in.	Tolerances, Plus and Minus,[a] in.	
	Rounds	Hexagons, Octagons
Up to 0.150, incl	0.0013	0.0025
Over 0.150 to 0.500, incl	0.0015	0.003
Over 0.500 to 1.00, incl	0.002	0.004
Over 1.00 to 2.00, incl	0.0025	0.005
Over 2.00	0.15 per cent[b]	0.30 per cent[b]

[a] When tolerances are specified as all plus or all minus, double the values given.
[b] Expressed to the nearest 0.001 in.

TABLE II.—DIAMETER TOLERANCES FOR COLD-DRAWN ROD.

(Applicable to ASTM Designations B 98 (Alloys A and D), B 138, B 139, B 150, B 151, and B 196.)

Diameter or Distance Between Parallel Surfaces, in.	Tolerances, Plus and Minus,[a] in.	
	Rounds	Hexagons, Octagons
Up to 0.150, incl	0.002	...
Over 0.150 to 0.500,	0.002	0.004
Over 0.500 to 1.00 incl	0.003	0.005
Over 1.00 to 2.00, incl	0.004	0.006
Over 2.00	0.20 per cent[b]	0.40 per cent[b]

[a] When tolerances are specified as all plus or all minus, double the values given.
[b] Expressed to the nearest 0.001 in.

TABLE III.—DIAMETER TOLERANCES FOR PISTON FINISH ROD.

(Applicable to ASTM Designations B 21, B 138, B 139, and B 150.)

Diameter or Distance Between Parallel Surfaces, in.	Tolerances, Plus and Minus,[a] in.
Over 0.500 to 1.00, incl	0.0013
Over 1.00 to 2.00, incl	0.0015
Over 2.00	0.10 per cent[b]

[a] When tolerances are specified as all plus or all minus, double the values given.
[b] Expressed to the nearest multiple of 0.0005 in.

TABLE IV.—DIAMETER TOLERANCES FOR AS-EXTRUDED ROD AND BAR.

(Applicable to ASTM Designations B 138 (Alloy A) and B 150.)

Diameter or Distance Between Parallel Surfaces, in.	Tolerances, Plus and Minus,[a] in.
	Rounds, Squares, Rectangles, Hexagons, Octagons
Up to 1.00, incl	0.010
Over 1.00 to 2.00, incl	0.015
Over 2.00 to 3.00, incl	0.025
Over 3.00 to 3.50, incl	0.035
Over 3.50 to 4.00, incl	0.060

[a] When tolerances are specified as all plus or all minus, double the values given.

TABLE V.—DIAMETER TOLERANCES FOR AS-EXTRUDED ROD AND BAR.

(Applicable to ASTM Designation B 138 (Alloy B.)

Diameter or Distance Between Parallel Surfaces, in.	Tolerances, Plus and Minus,[a] in.
	Rounds, Squares, Rectangles, Hexagons, Octagons
Up to 1.00, incl	0.020
Over 1.00 to 2.00, incl	0.030
Over 2.00 to 3.00, incl	0.050
Over 3.00 to 3.50, incl	0.070
Over 3.50 to 4.00, incl	0.120

[a] When tolerances are specified as all plus or all minus, double the values given.

TABLE VI.—DIAMETER TOLERANCES FOR HOT-ROLLED ROUND ROD.

(Applicable to ASTM Designations B 98, B 138, B 150, and B 196.)

Diameter, in.	Tolerances, Plus and Minus,[a] in.
0.250 only	+0.020, −0.010
Over 0.250 to 0.750, incl	0.015
Over 0.750 to 1.25, incl	0.020
Over 1.25 to 1.50, incl	0.030
Over 1.50 to 3.00, incl	1/16
Over 3.00	1/8

[a] When tolerances are specified as all plus or all minus, double the values given.

TABLE VII.—THICKNESS TOLERANCES FOR RECTANGULAR AND SQUARE BAR.

(Applicable to ASTM Designation B 133.)

Thickness, in.	Thickness Tolerances, Plus and Minus,[a] in., for Widths Given in Inches					
	½ and under	Over ½ to 1¼, incl	Over 1¼ to 2, incl	Over 2 to 4, incl	Over 4 to 8, incl	Over 8 to 12, incl
Over 0.188 to 0.500, incl	0.003	0.003	0.0035	0.004	0.0045	0.0055
Over 0.500 to 1.00, incl	...	0.004	0.004	0.0045	0.005	0.006
Over 1.00 to 2.00, incl	...	0.0045	0.0045	0.005	0.006	...
Over 2.00 to 4.00, incl	...	...	...	0.30 per cent[b]	...	...

[a] When tolerances are specified as all plus or all minus, double the values given.
[b] Expressed to the nearest 0.001 in.

TABLE VIII.—THICKNESS TOLERANCES FOR RECTANGULAR AND SQUARE BAR.

(Applicable to ASTM Designations B 16, B 21, B 98 (Alloy B), and B 140.)

Thickness, in.	Thickness Tolerances, Plus and Minus,[a] in., for Widths Given in Inches					
	½ and under	Over ½ to 1¼, incl	Over 1¼ to 2, incl	Over 2 to 4, incl	Over 4 to 8, incl	Over 8 to 12, incl
Over 0.188 to 0.500, incl	0.0035	0.004	0.0045	0.0045	0.006	0.008
Over 0.500 to 1.00, incl	...	0.0045	0.005	0.005	0.007	0.009
Over 1.00 to 2.00, incl	...	0.005	0.005	0.006	0.008	...
Over 2.00 to 4.00, incl	...	...	...	0.30 per cent[b]	...	...

[a] When tolerances are specified as all plus or all minus, double the values given.
[b] Expressed to the nearest 0.001 in.

TABLE IX.—THICKNESS TOLERANCES FOR RECTANGULAR AND SQUARE BAR.

(Applicable to ASTM Designations B 98 (Alloys A and D), B 138, B 139, B 150, B 151, and B 196.)

Thickness, in.	Thickness Tolerances, Plus and Minus,[a] in., for Widths Given in Inches					
	½ and under	Over ½ to 1¼, incl	Over 1¼ to 2, incl	Over 2 to 4, incl	Over 4 to 8, incl	Over 8 to 12, incl
Over 0.188 to 0.500, incl	0.005	0.005	0.006	0.007	0.009	0.012
Over 0.500 to 1.00, incl	...	0.006	0.007	0.008	0.010	0.013
Over 1.00 to 2.00, incl	...	0.006	0.007	0.009	0.011	...
Over 2.00 to 4.00, incl	...	...	...	0.50 per cent[b]	...	...

[a] When tolerances are specified as all plus or all minus, double the values given.
[b] Expressed to the nearest 0.001 in.

TABLE X.—WIDTH TOLERANCES FOR RECTANGULAR BAR.

(Applicable to ASTM Designations B 16, B 21, B 98 (Alloy B), B 133, and B 140.)

Width, in.	Tolerances, Plus and Minus,[a] in.
Over 0.188 to 0.500, incl	0.0035
Over 0.500 to 1.25, incl	0.005
Over 1.25 to 2.00, incl	0.008
Over 2.00 to 4.00, incl	0.012
Over 4.00 to 12.00, incl	0.30 per cent[b]

[a] When tolerances are specified as all plus or all minus, double the values given.
[b] Expressed to the nearest 0.001 in.

TABLE XI.—WIDTH TOLERANCES FOR RECTANGULAR BAR.

(Applicable to ASTM Designations B 98 (Alloys A and D), B 138, B 139, B 150, B 151, and B 196.)

Width, in.	Tolerances, Plus and Minus,[a] in.
Over 0.188 to 0.500, incl	0.005
Over 0.500 to 1.25, incl	0.007
Over 1.25 to 2.00, incl	0.010
Over 2.00 to 4.00, incl	0.015
Over 4.00 to 12.00, incl	0.50 per cent[b]

[a] When tolerances are specified as all plus or all minus, double the values given.
[b] Expressed to the nearest 0.001 in.

TABLE XII.—LENGTH TOLERANCES FOR ROD, BAR AND SHAPES (FULL-LENGTH PIECES SPECIFIC AND STOCK LENGTHS WITH OR WITHOUT ENDS).

(Applicable to ASTM Designations B 16, B 21, B 98, B 133, B 138, B 139, B 140, B 150, B 151, and B 196.)

NOTE.—The length tolerances in this table are all plus; if all minus tolerances are desired, use the same values; if tolerances are desired plus and minus, halve the values given.

Length Classification	Tolerances, All Plus, in. (Applicable only to Full-Length Pieces)
Specific lengths	3/8
Specific lengths with ends	1
Stock lengths with or without ends	1[a]

[a] As stock lengths are cut and placed in stock in advance of orders, departure from this tolerance is not practicable.

TABLE XIII.—SCHEDULE OF LENGTHS (SPECIFIC AND STOCK) WITH ENDS FOR ROD AND BAR.

(Applicable to ASTM Designations B 16, B 21, B 133, B 138 (Alloy A), and B 140.)

Diameter or Distance Between Parallel Surface for Round, Hexagonal and Octagonal Rod, and Square Bar, in.	Rectangular Bar, Area,[a] sq in.	Nominal Length, ft	Shortest Permissible Length,[b] Per Cent of Nominal Length	Maximum Permissible Weight of Ends, Per Cent of Lot Weight
0.500 and under	0.250 and under	6 to 14, incl	75	20
Over 0.500 to 1.00, incl	Over 0.250 to 1.00, incl	6 to 14, incl	70	30
Over 1.00 to 1.500, incl	Over 1.00 to 2.25, incl	6 to 12, incl	60	40
Over 1.500 to 2.00, incl	Over 2.25 to 4.00, incl	6 to 12, incl	50	45
Over 2.00 to 3.00, incl	Over 4.00 to 9.00, incl	6 to 10, incl	40	50

[a] Width times thickness, disregarding any rounded corners or edges.
[b] Expressed to the nearest ½ ft.

TABLE XIV.—SCHEDULE OF LENGTHS (SPECIFIC AND STOCK) WITH ENDS FOR ROD AND BAR.

(Applicable to ASTM Designations B 98, B 138 (Alloy B), B 139, B 150, B 151, and B 196.)

Diameter or Distance Between Parallel Surfaces for Round, Hexagonal and Octagonal Rod, and Square Bar, in.	Rectangular Bar, Area,[a] sq in.	Nominal Length, ft	Shortest Permissible Length,[b] Per Cent of Nominal Length	Maximum Permissible Weight of Ends, Per Cent of Lot Weight
0.500 and under	0.250 and under	6 to 12, incl	65	30
Over 0.500 to 1.00, incl	Over 0.250 to 1.00, incl	6 to 12, incl	60	40
Over 1.00 to 1.500, incl	Over 1.00 to 2.25, incl	6 to 10, incl	50	50
Over 1.500 to 2.00, incl	Over 2.25 to 4.00, incl	6 to 10, incl	40	60

[a] Width times thickness, disregarding any rounded corners or edges.
[b] Expressed to the nearest ½ ft.

TABLE XV.—STRAIGHTNESS TOLERANCES FOR ROD, BAR, AND SHAPES

(Applicable to ASTM Designations B 16, B 21, B 98, B 133, B 138 B 139, B 140, B 150, B 151, and B 196)

	Length, ft	Maximum Curvature (Depth of Arc), in.
Drawn Rod	Up to 2	1/32
	2 to 5 incl	1/32 in any 2-ft portion[a]
	5 to 10 incl	1/8 in any 5-ft portion[a]
	Over 10	1/2 in any 10-ft portion[a]
Bar and Shape (rolled or drawn)	6 and over	1/2 in any 6-ft portion[a,b]

[a] Of total length.
[b] Applicable to any longitudinal surface or edge.

TABLE XVI.—STRAIGHTNESS TOLERANCES FOR SHAFTING.

(Applicable to ASTM Designations B 21, B 138, B 139, and B 150.)

Length of Shaft, ft	Maximum Permissible Departure from Straightness of Either Center or End Portions, in.	Minimum Diameter Applicable for Length Indicated, in.
Up to 6, incl	0.005	½
7	0.007	½
8	0.009	½
9	0.012	½
10	0.014	½
11	0.017	½
12	0.020	½
14	0.028	⅝
16	0.036	¾
18	0.045	1
20	0.055	1¼
22	0.068	1½
24	0.078	1¾
26	0.094	2

TABLE XVII.—DIAMETER TOLERANCES FOR HOT-FORGED ROD AND BAR.

(Applicable to ASTM Designation B 138.)

Diameter or Distance Between Parallel Surfaces, in.	Tolerances, All Plus, in.	
	As-Forged	Rough-Turned
Over 3.50	0.125	0.050

INDEX

INDEX

FERROUS MATERIALS

Steel Pipe

SPEC. NO.	SPECIFICATION NAME	PAGE
SA-53-61T	Welded and Seamless Steel Pipe	10
SA-106-61T	Seamless Carbon Steel Pipe for High Temperature Service	33
SA-135-61T	Electric-Resistance-Welded Steel Pipe	42
SA-312-61T	Seamless and Welded Austenitic Stainless Steel Pipe	165
SA-333-61T	Seamless and Welded Steel Pipe for Low Temperature Service	187
SA-335-61T	Seamless Ferritic Alloy Steel Pipe for High Temperature Service	197
SA-369-61T	Ferritic Alloy Steel Forged and Bored Pipe for High Temperature Service	229
SA-376-61T	Seamless Austenitic Steel Pipe for High Temperature Central Station Service	241
SA-430-61T	Austenitic Steel Forged and Bored Pipe for High Temperature Service	260

Steel Tubes

SA-83-61T	Seamless Carbon Steel and Open Hearth Iron Boiler Tubes	27
SA-178-61T	Electric-Resistance-Welded Carbon Steel and Open Hearth Iron Boiler Tubes	47
SA-179-61T	Seamless Cold-Drawn Low Carbon Steel Heat Exchanger and Condenser Tubes	49
SA-192-61T	Seamless Carbon Steel Boiler Tubes for High Pressure Service	56
SA-199-61T	Seamless Cold-Drawn Intermediate Alloy Steel Heat Exchanger and Condenser Tubes	66
SA-209-61T	Seamless Carbon-Molybdenum Alloy Steel Boiler and Superheater Tubes	76
SA-210-61T	Seamless Medium Carbon Steel Boiler and Superheater Tubes	78
SA-213-61T	Seamless Ferritic and Austenitic Alloy Steel Boiler, Superheater, and Heat Exchanger Tubes	82
SA-214-61T	Electric-Resistance-Welded Carbon Steel Heat Exchanger and Condenser Tubes	86
SA-226-61T	Electric-Resistance-Welded Carbon Steel Boiler and Superheater Tubes for High Pressure Service	96
SA-249-61T	Welded Austenitic Steel Boiler, Superheater, Heat Exchanger, and Condenser Tubes	116
SA-250-61T	Electric-Resistance-Welded Carbon-Molybdenum Alloy Steel Boiler and Superheater Tubes	119
SA-268-61	Seamless and Welded Ferritic Stainless Steel Tubing for General Service	139
SA-334-61T	Seamless and Welded Carbon and Alloy Steel Tubes for Low Temperature Service	194
SA-423-61T	Seamless and Electric Welded Low Alloy Tubes	258
SA-450-61T	General Requirements for Carbon, Ferritic Alloy, and Austenitic Alloy Steel Tubes	533

Steel Bolting, Flanges, Fittings, Valves, and Parts

SA-105-61T	Forged or Rolled Steel Pipe Flanges, Forged Fittings, and Valves and Parts for High Temperature Service	31
SA-181-61T	Forged or Rolled Steel Pipe Flanges, Forged Fittings, and Valves and Parts for General Service	50
SA-182-61T	Forged or Rolled Alloy Steel Pipe Flanges, Forged Fittings, and Valves and Parts for High Temperature Service	52
SA-193-61T	Alloy Steel Bolting Materials for High Temperature Service	57
SA-194-59T	Carbon and Alloy Steel Nuts for Bolts for High Pressure and High Temperature Service	61
SA-216-60T	Carbon Steel Castings Suitable for Fusion Welding for High Temperature Service	87
SA-217-60T	Alloy Steel Castings for Pressure Containing Parts Suitable for High Temperature Service	90
SA-320-59T	Alloy Steel Bolting Material for Low Temperature Service	179
SA-350-61T	Forged or Rolled Carbon and Alloy Steel Flanges, Forged Fittings, and Valves and Parts for Low Temperature Service	209
SA-351-61T	Ferritic and Austenitic Steel Castings for High Temperature Service	213
SA-352-60T	Ferritic Steel Castings for Pressure Containing Parts Suitable for Low Temperature Service	217

Steel Sheets, Plates, and Rivets for Boilers and Pressure Vessels

SA-20-59	General Requirements for Delivery of Rolled Steel Plates of Flange and Firebox Qualities	495
SA-30-56	Boiler and Firebox Steel for Locomotives	3
SA-31-55	Boiler Rivet Steel and Rivets	4
SA-129-56	Open Hearth Iron Plates of Flange Quality	41
SA-201-61T	Carbon-Silicon Steel Plates of Intermediate Tensile Ranges for Fusion-Welded Boilers and Other Pressure Vessels	68
SA-202-56	Chromium-Manganese-Silicon (CMS) Alloy Steel Plates for Boilers and Other Pressure Vessels	70
SA-203-61	Nickel Steel Plates for Boilers and Other Pressure Vessels	72
SA-204-61	Molybdenum Steel Plates for Boilers and Other Pressure Vessels	74
SA-212-61T	High Tensile Strength Carbon-Silicon Steel Plates for Boilers and Other Pressure Vessels	80
SA-225-56	Manganese-Vanadium Steel Plates for Boilers and Other Pressure Vessels	94
SA-240-61T	Corrosion-Resisting Chromium and Chromium-Nickel Steel Plate, Sheet, and Strip for Fusion-Welded Unfired Pressure Vessels	109
SA-263-61T	Corrosion-Resisting Chromium Steel Clad Plate, Sheet, and Strip	124
SA-264-61T	Corrosion-Resisting Chromium-Nickel Steel Clad Plate, Sheet, and Strip	129
SA-265-43T	Nickel and Nickel-Base alloy Clad Steel Plate	133
SA-285-57T	Low and Intermediate Tensile Strength Carbon Steel Plates of Flange and Firebox Qualities	145
SA-299-56	High Tensile Strength Carbon-Manganese-Silicon Steel Plates for Boilers and Other Pressure Vessels	155
SA-300-58	Steel Plates for Pressure Vessels for Service at Low Temperatures	157
SA-302-56	Manganese-Molybdenum Steel Plates for Boilers and Other Pressure Vessels	159
SA-353-58	Low-Carbon High-Nickel Steel Plate for Pressure Vessels	221
SA-357-58	5 Per Cent Chromium, 0.5 Per Cent Molybdenum Steel Plates for Boilers and Other Pressure Vessels	226

Steel Sheets, Plates, and Rivets for Boilers and Pressure Vessels (Continued)

SPEC. NO.	SPECIFICATION NAME	PAGE
SA-387-61T	Chromium-Molybdenum Steel Plates for Boilers and Other Pressure Vessels	247
SA-410-57T	Chromium-Copper-Nickel-Aluminum Alloy Steel Plates for Pressure Vessels	253
SA-414-58T	Carbon Steel Sheets of Flange and Firebox Qualities	255
SA-433-59T	Leaded Carbon Steel Plates of Flange and Firebox Qualities for Fusion Welded Boilers and Other Pressure Vessels	265
SA-442-60T	Carbon Steel Plates with Improved Transition Properties	268
SA-455-61T	High Tensile Strength Carbon-Manganese Steel Plates for Unfired Pressure Vessels	270

Structural Steel

SA-6-61T	General Requirements for Delivery of Rolled Steel Plates, Shapes, Sheet Piling, and Bars for Structural Use	483
SA-7-61T	Steel for Bridges and Buildings	1
SA-36-61T	Structural Steel	6
SA-113-58	Structural Steel for Locomotives and Cars	40
SA-283-58	Low and Intermediate Tensile Strength Carbon Steel Plates of Structural Quality	144

Steel Bars and Rivet Steel

SA-6-61T	General Requirements for Delivery of Rolled Steel Plates, Shapes, Sheet Piling, and Bars for Structural Use	483
SA-29-61T	General Requirements for Hot-Rolled and Cold-Finished Carbon and Alloy Steel Bars	501
SA-31-55	Boiler Rivet Steel and Rivets	4
SA-306-60T	Carbon Steel Bars Subject to Mechanical Property Requirements	161

Steel Bolting Materials

SA-193-61T	Alloy Steel Bolting Materials for High Temperature Service	57
SA-194-59T	Carbon and Alloy Steel Nuts for Bolts for High Pressure and High Temperature Service	61
SA-307-61T	Low-Carbon Steel Externally and Internally Threaded Standard Fasteners	163
SA-320-59T	Alloy Steel Bolting Materials for Low Temperature Service	179
SA-325-58T	Quenched and Tempered Steel Bolts and Studs with Suitable Nuts and Plain Hardened Washers	184
SA-354-58T	Quenched and Tempered Alloy Steel Bolts and Studs with Suitable Nuts	223

Steel Billets and Forgings

SA-266-60T	Carbon Steel Seamless Drum Forgings	136
SA-336-61T	Alloy Steel Seamless Drum Forgings	204
SA-372-60	Carbon and Alloy Steel Forgings for Pressure Vessel Shells	237

Steel Castings

SA-216-60T	Carbon Steel Castings Suitable for Fusion Welding for High Temperature Service	87
SA-217-60T	Alloy Steel Castings for Pressure Containing Parts Suitable for High Temperature Service	90
SA-351-61T	Ferritic and Austenitic Steel Castings for High Temperature Service	213
SA-352-60T	Ferritic Steel Castings for Pressure Containing Parts Suitable for Low Temperature Service	217

Corrosion-Resisting and Heat-Resisting Steels

SA-182-61T	Forged or Rolled Alloy Steel Pipe Flanges, Forged Fittings, and Valves and Parts for High Temperature Service	52
SA-193-61T	Alloy Steel Bolting Materials for High Temperature Service	57
SA-194-59T	Carbon and Alloy Steel Nuts for Bolts for High Pressure and High Temperature Service	61
SA-213-61T	Seamless Ferritic and Austenitic Alloy Steel Boiler, Superheater, and Heat Exchanger Tubes	82
SA-240-61T	Corrosion-Resisting Chromium and Chromium-Nickel Steel Plate, Sheet, and Strip for Fusion Welded Unfired Pressure Vessels	109
SA-249-61T	Welded Austenitic Steel Boiler, Superheater, Heat Exchanger, and Condenser Tubes	116
SA-263-61T	Corrosion-Resisting Chromium Steel Clad Plate, Sheet, and Strip	124
SA-264-61T	Corrosion-Resisting Chromium-Nickel Steel Clad Plate, Sheet, and Strip	129
SA-265-43T	Nickel and Nickel-Base Alloy Clad Steel Plate	133
SA-268-61	Seamless and Welded Ferritic Stainless Steel Tubing for General Service	139
SA-298-55T	Corrosion-Resisting Chromium and Chromium-Nickel Steel Covered Welding Electrodes	147
SA-312-61T	Seamless and Welded Austenitic Stainless Steel Pipe	165
SA-320-59T	Alloy Steel Bolting Materials for Low Temperature Service	179
SA-336-61T	Alloy Steel Seamless Drum Forgings	204
SA-351-61T	Ferritic and Austenitic Steel Castings for High Temperature Service	213
SA-376-61T	Seamless Austenitic Steel Pipe for High Temperature Central Station Service	241
SA-430-61T	Austenitic Steel Forged and Bored Pipe for High Temperature Service	260

Welding Electrodes and Rods

SA-233-58T	Mild Steel Arc-Welding Electrodes	97
SA-251-46T	Iron and Steel Gas-Welding Rods	121
SA-298-55T	Corrosion-Resisting Chromium and Chromium-Nickel Steel Covered Welding Electrodes	147
SA-316-58T	Low-Alloy Steel Covered Arc-Welding Electrodes	170
SA-371-53T	Corrosion-Resisting Chromium and Chromium-Nickel Steel Welding Rods and Bare Electrodes	233

Wrought Iron, Cast Iron, and Malleable Iron

SA-47-61	Malleable Iron Castings	8
SA-72-61T	Welded Wrought Iron Pipe	23
SA-84-60T	Staybolt Wrought Iron, Solid	29

Wrought Iron, Cast Iron, and Malleable Iron (Continued)

SPEC. NO.	SPECIFICATION NAME	PAGE
SA-197-47	Cupola Malleable Iron	65
SA-278-61T	Gray Iron Castings for Pressure Containing Parts for Temperatures Up to 650F	142
SA-395-61	Cast Nodular Iron for Pressure Containing Parts for Use at Elevated Temperatures	250

Methods

SA-370-61T	Methods and Definitions for Mechanical Testing of Steel Products	509
SA-435-59T	Method and Spec. for Ultrasonic Testing and Inspection of Steel Plates of Firebox and Higher Quality	532

NONFERROUS MATERIALS

Aluminum and Aluminum-Base Alloys

SPEC. NO.	SPECIFICATION NAME	PAGE
SB-209-61	Aluminum Alloy Sheet and Plate	375
SB-210-61	Aluminum Alloy Drawn Seamless Tube	382
SB-211-61	Aluminum Alloy Bars, Rods, and Wire	386
SB-221-61	Aluminum Alloy Extruded Bars, Rods, and Shapes	390
SB-234-61	Aluminum Alloy Drawn Seamless Tubes for Condensers and Heat Exchangers	400
SB-235-61	Aluminum Alloy Extruded Tubes	404
SB-241-61	Aluminum Alloy Pipe	409
SB-247-61	Aluminum Alloy Die Forgings	414
SB-308-61	Aluminum Alloy Standard Structural Shapes, Rolled or Extruded	449

Copper and Copper Alloy Plate, Sheet, Strip, and Rolled Bar

SB-11-61	Copper Plates for Locomotive Fireboxes	273
SB-96-61	Copper-Silicon Alloy Plate and Sheet for Pressure Vessels	291
SB-152-60	Copper Sheet, Strip, Plate, and Rolled Bar	312
SB-169-55	Aluminum Bronze Plate, Sheet, Strip, and Rolled Bar	367
SB-171-58	Copper Alloy Condenser Tube Plates	369

Copper and Copper Alloy Rod, Bar, and Shapes

SB-12-61	Copper Rods for Locomotive Staybolts	275
SB-98-58	Copper-Silicon Alloy Rod, Bar, and Shapes	294
SB-150-58	Aluminum Bronze Rod, Bar, and Shapes	310
SB-249-60	General Requirements for Wrought Copper and Copper Alloy Rod, Bar, and Shapes	538

Copper and Copper Alloy Pipe and Tube

SB-13-58	Seamless Copper Boiler Tubes	277
SB-42-58	Seamless Copper Pipe, Standard Sizes	280
SB-43-58	Seamless Red Brass Pipe, Standard Sizes	282
SB-75-61	Seamless Copper Tube	288
SB-111-60	Copper and Copper Alloy Seamless Condenser Tubes and Ferrule Stock	297
SB-315-61	Copper-Silicon Alloy Seamless Pipe and Tube	452
SB-359-60	Copper and Copper Alloy Seamless Condenser and Heat Exchanger Tubes with Integral Fins	477

Copper Alloy Castings

SB-61-52	Steam or Valve Bronze Castings	284
SB-62-52	Composition Brass or Ounce Metal Castings	286
SB-149-52	Leaded Nickel Bronze (Leaded Nickel Silver) Sand Castings	308

Nickel and Nickel Alloy Plate, Sheet, and Strip

SB-127-61	Nickel-Copper Alloy Plate, Sheet, and Strip	301
SB-162-61	Nickel Plate, Sheet, and Strip	325
SB-168-61T	Nickel-Chromium-Iron Alloy Plate, Sheet, and Strip	360
SB-333-58T	Nickel-Molybdenum Alloy Plate and Sheet	456
SB-334-58T	Nickel-Molybdenum-Chromium Alloy Plate and Sheet	461

Nickel and Nickel Alloy Rod, Bar, and Wire

SB-160-61	Nickel Rod and Bar	314
SB-164-61	Nickel-Copper Alloy Rod and Bar	338
SB-166-61T	Nickel-Chromium-Iron Alloy Rod and Bar	350
SB-335-58T	Nickel-Molybdenum Alloy Rod	466
SB-336-58T	Nickel-Molybdenum-Chromium Alloy Rod	470

Nickel and Nickel Alloy Pipe and Tube

SPEC. NO.	SPECIFICATION NAME	PAGE
SB-161-61	Nickel Seamless Pipe and Tube	320
SB-163-61T	Seamless Nickel and Nickel Alloy Condenser and Heat Exchanger Tubes	333
SB-165-61	Nickel-Copper Alloy Seamless Pipe and Tube	345
SB-167-61T	Nickel-Chromium-Iron Alloy Seamless Pipe and Tube	355

Welding Electrodes and Rods, and Filler Metal

SB-184-43T	Aluminum and Aluminum Alloy Metal Arc-Welding Electrodes	371
SB-225-57T	Copper and Copper Alloy Arc-Welding Electrodes	394
SB-259-57T	Copper and Copper Alloy Welding Rods	417
SB-260-56T	Brazing Filler Metal	424
SB-285-57T	Aluminum and Aluminum Alloy Welding Rods and Bare Electrodes	431
SB-295-54T	Nickel and Nickel-Base Alloy Covered Welding Electrodes	437
SB-304-56T	Nickel and Nickel-Base Alloy Bare Welding Filler Metals	444

Titanium

SB-348-59T	Titanium and Titanium Alloy Bars and Billets	474

INDEX IN NUMERIC SEQUENCE

FERROUS MATERIALS

SPEC. NO.	SPECIFICATION NAME	PAGE
SA-6-61T	General Requirements for Delivery of Rolled Steel Plates, Shapes, Sheet Piling, and Bars for Structural Use	483
SA-7-61T	Steel for Bridges and Buildings	1
SA-20-59	General Requirements for Delivery of Rolled Steel Plates of Flange and Firebox Qualities	495
SA-29-61T	General Requirements for Hot-Rolled and Cold-Finished Carbon and Alloy Steel Bars	501
SA-30-56	Boiler and Firebox Steel for Locomotives	3
SA-31-55	Boiler Rivet Steel and Rivets	4
SA-36-61T	Structural Steel	6
SA-47-61	Malleable Iron Castings	8
SA-53-61T	Welded and Seamless Steel Pipe	10
SA-72-61T	Welded Wrought Iron Pipe	23
SA-83-61T	Seamless Carbon Steel and Open Hearth Iron Boiler Tubes	27
SA-84-60T	Staybolt Wrought Iron, Solid	29
SA-105-61T	Forged or Rolled Steel Pipe Flanges, Forged Fittings, and Valves and Parts for High Temperature Service	31
SA-106-61T	Seamless Carbon Steel Pipe for High Temperature Service	33
SA-113-58	Structural Steel for Locomotives and Cars	40
SA-129-56	Open Hearth Iron Plates of Flange Quality	41
SA-135-61T	Electric-Resistance-Welded Steel Pipe	42
SA-178-61T	Electric-Resistance-Welded Carbon Steel and Open Hearth Iron Boiler Tubes	47
SA-179-61T	Seamless Cold-Drawn Low Carbon Steel Heat Exchanger and Condenser Tubes	49
SA-181-61T	Forged or Rolled Steel Pipe Flanges, Forged Fittings, and Valves and Parts for General Service	50
SA-182-61T	Forged or Rolled Alloy Steel Pipe Flanges, Forged Fittings, and Valves and Parts for High Temperature Service	52
SA-192-61T	Seamless Carbon Steel Boiler Tubes for High Pressure Service	56
SA-193-61T	Alloy Steel Bolting Materials for High Temperature Service	57
SA-194-59T	Carbon and Alloy Steel Nuts for Bolts for High Pressure and High Temperature Service	61
SA-197-47	Cupola Malleable Iron	65
SA-199-61T	Seamless Cold-Drawn Intermediate Alloy Steel Heat Exchanger and Condenser Tubes	66
SA-201-61T	Carbon-Silicon Steel Plates of Intermediate Tensile Ranges for Fusion-Welded Boilers and Other Pressure Vessels	68
SA-202-56	Chromium-Manganese-Silicon (CMS) Alloy Steel Plates for Boilers and Other Pressure Vessels	70
SA-203-61	Nickel-Steel Plates for Boilers and Other Pressure Vessels	72
SA-204-61	Molybdenum-Steel Plates for Boilers and Other Pressure Vessels	74
SA-209-61T	Seamless Carbon-Molybdenum Alloy Steel Boiler and Superheater Tubes	76
SA-210-61T	Seamless Medium Carbon Steel Boiler and Superheater Tubes	78
SA-212-61T	High Tensile Strength Carbon-Silicon Steel Plates for Boilers and Other Pressure Vessels	80
SA-213-61T	Seamless Ferritic and Austenitic Alloy Steel Boiler, Superheater, and Heat Exchanger Tubes	82
SA-214-61T	Electric-Resistance-Welded Carbon Steel Heat Exchanger and Condenser Tubes	86
SA-216-60T	Carbon Steel Castings Suitable for Fusion Welding for High Temperature Service	87
SA-217-60T	Alloy Steel Castings for Pressure Containing Parts Suitable for High Temperature Service	90
SA-225-56	Manganese-Vanadium Steel Plates for Boilers and Other Pressure Vessels	94
SA-226-61T	Electric-Resistance-Welded Carbon Steel Boiler and Superheater Tubes for High Pressure Service	96
SA-233-58T	Mild Steel Arc-Welding Electrodes	97
SA-240-61T	Corrosion-Resisting Chromium and Chromium-Nickel Steel Plate, Sheet, and Strip for Fusion-Welded Unfired Pressure Vessels	109
SA-249-61T	Welded Austenitic Steel Boiler, Superheater, Heat Exchanger, and Condenser Tubes	116
SA-250-61T	Electric-Resistance-Welded Carbon-Molybdenum Alloy Steel Boiler and Superheater Tubes	119
SA-251-46T	Iron and Steel Gas-Welding Rods	121
SA-263-61T	Corrosion-Resisting Chromium Steel Clad Plate, Sheet, and Strip	124
SA-264-61T	Corrosion-Resisting Chromium-Nickel Steel Clad Plate, Sheet, and Strip	129
SA-265-43T	Nickel and Nickel-Base Alloy Clad Steel Plate	133
SA-266-60T	Carbon Steel Seamless Drum Forgings	136
SA-268-61	Seamless and Welded Ferritic Stainless Steel Tubing for General Service	139
SA-278-61T	Gray Iron Castings for Pressure-Containing Parts for Temperatures Up to 650F	142
SA-283-58	Low and Intermediate Tensile Strength Carbon Steel Plates of Structural Quality	144
SA-285-57T	Low and Intermediate Tensile Strength Carbon Steel Plates of Flange and Firebox Qualities	145
SA-298-55T	Corrosion-Resisting Chromium and Chromium-Nickel Steel Covered Welding Electrodes	147
SA-299-56	High Tensile Strength Carbon-Manganese-Silicon Steel Plates for Boilers and Other Pressure Vessels	155
SA-300-58	Steel Plates for Pressure Vessels for Service at Low Temperatures	157
SA-302-56	Manganese-Molybdenum Steel Plates for Boilers and Other Pressure Vessels	159
SA-306-60T	Carbon Steel Bars Subject to Mechanical Property Requirements	161
SA-307-61T	Low-Carbon Steel Externally and Internally Threaded Standard Fasteners	163
SA-312-61T	Seamless and Welded Austenitic Stainless Steel Pipe	165
SA-316-58T	Low-Alloy Steel Covered Arc-Welding Electrodes	170
SA-320-59T	Alloy-Steel Bolting Materials for Low Temperature Service	179
SA-325-58T	Quenched and Tempered Steel Bolts and Studs with Suitable Nuts and Plain Hardened Washers	184
SA-333-61T	Seamless and Welded Steel Pipe for Low Temperature Service	187
SA-334-61T	Seamless and Welded Carbon and Alloy-Steel Tubes for Low Temperature Service	194
SA-335-61T	Seamless Ferritic Alloy Steel Pipe for High Temperature Service	197
SA-336-61T	Alloy Steel Seamless Drum Forgings	204
SA-350-61T	Forged or Rolled Carbon and Alloy Steel Flanges, Forged Fittings, and Valves and Parts for Low Temperature Service	209
SA-351-61T	Ferritic and Austenitic Steel Castings for High Temperature Service	213
SA-352-60T	Ferritic Steel Castings for Pressure Containing Parts Suitable for Low Temperature Service	217
SA-353-58	Low-Carbon High-Nickel Steel Plate for Pressure Vessels	221

FERROUS MATERIALS (Continued)

SPEC. NO.	SPECIFICATION NAME	PAGE
SA-354-58T	Quenched and Temperaed Alloy Steel Bolts and Studs with Suitable Nuts	223
SA-357-58	5 Per Cent Chromium, 0.5 Per Cent Molybdenum Steel Plates for Boilers and Other Pressure Vessels	226
SA-369-61T	Ferritic Alloy Steel Forged and Bored Pipe for High Temperature Service	229
SA-370-61T	Methods and Definitions for Mechanical Testing of Steel Products	509
SA-371-53T	Corrosion-Resisting Chromium and Chromium-Nickel Steel Welding Rods and Bare Electrodes	233
SA-372-60	Carbon and Alloy Steel Forgings for Pressure Vessel Shells	237
SA-376-61T	Seamless Austenitic Steel Pipe for High Temperature Central Station Service	241
SA-387-61T	Chromium-Molybdenum Steel Plates for Boilers and Other Pressure Vessels	247
SA-395-61	Cast Nodular Iron for Pressure Containing Parts for Use at Elevated Temperatures	250
SA-410-57T	Chromium-Copper-Nickel-Aluminum Alloy Steel Plates for Pressure Vessels	253
SA-414-58T	Carbon Steel Sheets of Flange and Firebox Qualities	255
SA-423-61T	Seamless and Electric Welded Low Alloy Steel Tubes	258
SA-430-61T	Austenitic Steel Forged and Bored Pipe for High Temperature Service	260
SA-433-59T	Leaded Carbon Steel Plates of Flange and Firebox Qualities for Fusion Welded Boilers and Other Pressure Vessels	265
SA-435-59T	Method and Spec. for Ultrasonic Testing and Inspection of Steel Plates of Firebox and Higher Quality	532
SA-442-60T	Carbon Steel Plates with Improved Transition Properties	268
SA-450-61T	General Requirements for Carbon, Ferritic Alloy, and Austenitic Alloy Steel Tubes	533
SA-455-61T	High Tensile Strength Carbon-Manganese Steel Plates for Unfired Pressure Vessels	270

NONFERROUS MATERIALS

SB-11-61	Copper Plates for Locomotive Fireboxes	273
SB-12-61	Copper Rods for Locomotive Staybolts	275
SB-13-58	Seamless Copper Boiler Tubes	277
SB-42-58	Seamless Copper Pipe, Standard Sizes	280
SB-43-58	Seamless Red Brass Pipe, Standard Sizes	282
SB-61-52	Steam or Valve Bronze Castings	284
SB-62-52	Composition Brass or Ounce Metal Castings	286
SB-75-61	Seamless Copper Tube	288
SB-96-61	Copper-Silicon Alloy Plate and Sheet for Pressure Vessels	291
SB-98-58	Copper-Silicon Alloy Rod, Bar, and Shapes	294
SB-111-60	Copper and Copper Alloy Seamless Condenser Tubes and Ferrule Stock	297
SB-127-61	Nickel-Copper Alloy Plate, Sheet, and Strip	301
SB-149-52	Leaded Nickel Bronze (Leaded Nickel Silver) Sand Castings	308
SB-150-58	Aluminum Bronze Rod, Bar, and Shapes	310
SB-152-60	Copper Sheet, Strip, Plate, and Rolled Bar	312
SB-160-61	Nickel Rod and Bar	314
SB-161-61	Nickel Seamless Pipe and Tube	320
SB-162-61	Nickel Plate, Sheet, and Strip	325
SB-163-61T	Seamless Nickel and Nickel Alloy Condenser and Heat Exchanger Tubes	333
SB-164-61	Nickel-Copper Alloy Rod and Bar	338
SB-165-61	Nickel-Copper Alloy Seamless Pipe and Tube	345
SB-166-61T	Nickel-Chromium-Iron Alloy Rod and Bar	350
SB-167-61T	Nickel-Chromium-Iron Alloy Seamless Pipe and Tube	355
SB-168-61T	Nickel-Chromium-Iron Alloy Plate, Sheet, and Strip	360
SB-169-55	Aluminum Bronze Plate, Sheet, Strip, and Rolled Bar	367
SB-171-58	Copper Alloy Condenser Tube Plates	369
SB-184-43T	Aluminum and Aluminum Alloy Metal Arc-Welding Electrodes	371
SB-209-61	Aluminum Alloy Sheet and Plate	375
SB-210-61	Aluminum Alloy Drawn Seamless Tube	382
SB-211-61	Aluminum Alloy Bars, Rods, and Wire	386
SB-221-61	Aluminum Alloy Extruded Bars, Rods, and Shapes	390
SB-225-57T	Copper and Copper Alloy Arc-Welding Electrodes	394
SB-234-61	Aluminum Alloy Drawn Seamless Tubes for Condensers and Heat Exchangers	400
SB-235-61	Aluminum Alloy Extruded Tubes	404
SB-241-61	Aluminum Alloy Pipe	409
SB-247-61	Aluminum Alloy Die Forgings	414
SB-249-60	General Requirements for Wrought Copper and Copper Alloy Rod, Bar, and Shapes	538
SB-259-57T	Copper and Copper Alloy Welding Rods	417
SB-260-56T	Brazing Filler Metal	424
SB-285-57T	Aluminum and Aluminum Alloy Welding Rods and Bare Electrodes	431
SB-295-54T	Nickel and Nickel-Base Alloy Covered Welding Electrodes	437
SB-304-56T	Nickel and Nickel-Base Alloy Bare Welding Filler Metals	444
SB-308-61	Aluminum Alloy Standard Structural Shapes, Rolled or Extruded	449
SB-315-61	Copper-Silicon Alloy Seamless Pipe and Tube	452
SB-333-58T	Nickel-Molybdenum Alloy Plate and Sheet	456
SB-334-58T	Nickel-Molybdenum-Chromium Alloy Plate and Sheet	461
SB-335-58T	Nickel-Molybdenum Alloy Rod	466
SB-336-58T	Nickel-Molybdenum-Chromium Alloy Rod	470
SB-348-59T	Titanium and Titanium Alloy Bars and Billets	474
SB-359-60	Copper and Copper Alloy Seamless Condenser and Heat Exchanger Tubes with Integral Fins	477